KH15
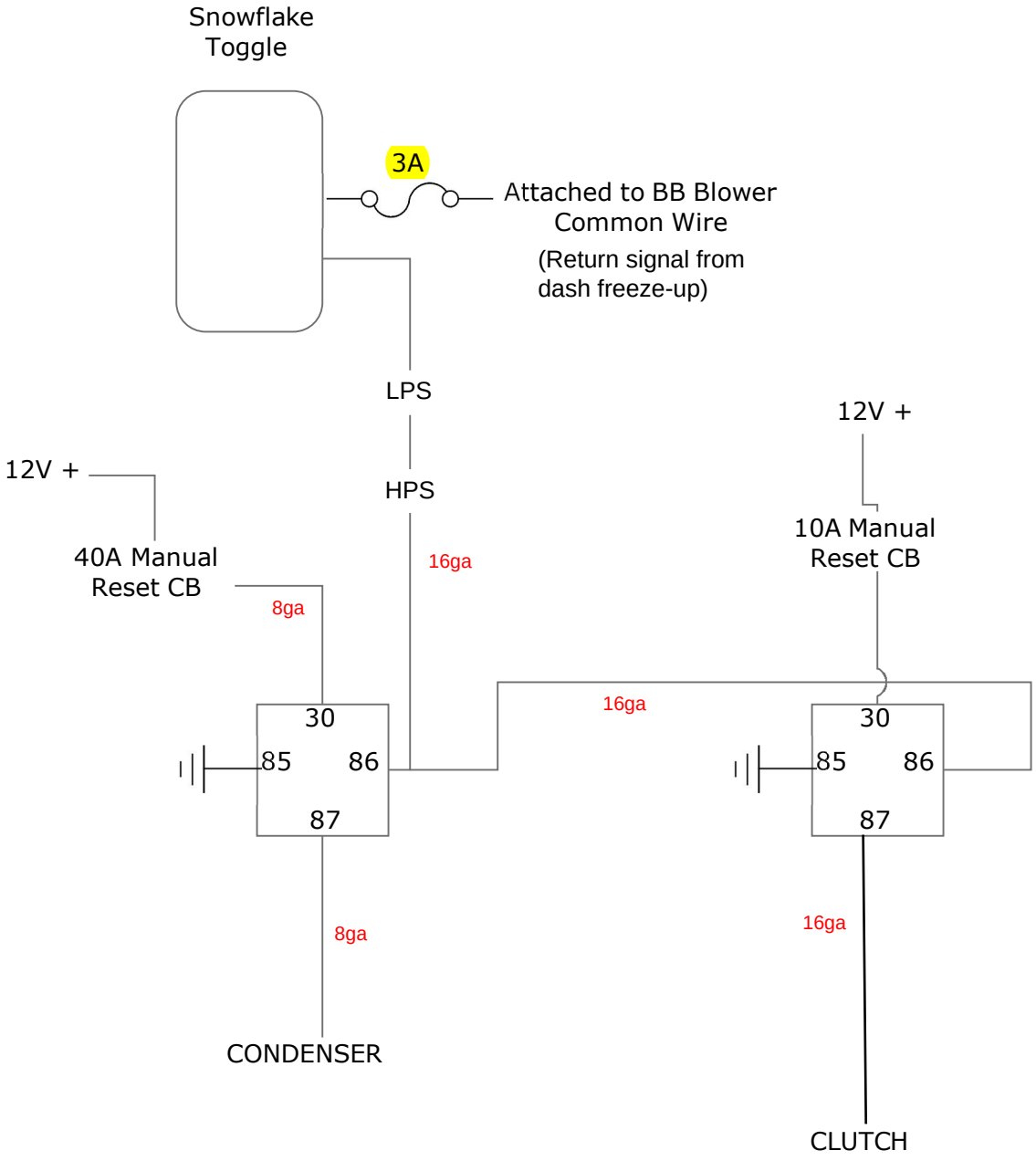
Standalone KDA00006 w/ Cond and Comp