PARTS AND SERVICE MANUAL

For KPP18060

DIESEL POWER PACK
INDEPENDENT A/C SYSTEM
FOR CHICK TRAILERS

Table of Contents

- CAT 2.2L Operation and Maintenance Manual
- CAT 2.2L Parts Manual
- Bitzer 6NFC Maintenance Instructions
- Dynagen TE410 User Manual
- KPP18060 Electrical Schematic 1 of 2
- KPP18060 Electrical Schematic 2 of 2
- KPP18060 PNID Drawing

CATERPILLAR®

SEBU8312-02
January 2010

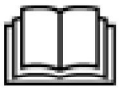

Operation and Maintenance Manual

C0.5, C0.7, C1.1, C1.5, C1.6 and C2.2 Industrial Engines

C6F1-Up (Engine)
C6H1-Up (Engine)
C7H1-Up (Engine)
C6J1-Up (Engine)
C7J1-Up (Engine)
C6K1-Up (Engine)
C6L1-Up (Engine)
G7L1-Up (Engine)
C6M1-Up (Engine)
C6N1-Up (Engine)
G8N1-Up (Engine)
G7P1-Up (Engine)
C8W1-Up (Engine)
C7Y1-Up (Engine)
C8Y1-Up (Engine)

Important Safety Information

Most accidents that involve product operation, maintenance and repair are caused by failure to observe basic safety rules or precautions. An accident can often be avoided by recognizing potentially hazardous situations before an accident occurs. A person must be alert to potential hazards. This person should also have the necessary training, skills and tools to perform these functions properly.

Improper operation, lubrication, maintenance or repair of this product can be dangerous and could result in injury or death.

Do not operate or perform any lubrication, maintenance or repair on this product, until you have read and understood the operation, lubrication, maintenance and repair information.

Safety precautions and warnings are provided in this manual and on the product. If these hazard warnings are not heeded, bodily injury or death could occur to you or to other persons.

The hazards are identified by the “Safety Alert Symbol” and followed by a “Signal Word” such as “DANGER”, “WARNING” or “CAUTION”. The Safety Alert “WARNING” label is shown below.

⚠ WARNING

The meaning of this safety alert symbol is as follows:

Attention! Become Alert! Your Safety is Involved.

The message that appears under the warning explains the hazard and can be either written or pictorially presented.

A non-exhaustive list of operations that may cause product damage are identified by “NOTICE” labels on the product and in this publication.

Caterpillar cannot anticipate every possible circumstance that might involve a potential hazard. The warnings in this publication and on the product are, therefore, not all inclusive. You must not use this product in any manner different from that considered by this manual without first satisfying yourself that you have considered all safety rules and precautions applicable to the operation of the product in the location of use, including site-specific rules and precautions applicable to the worksite. If a tool, procedure, work method or operating technique that is not specifically recommended by Caterpillar is used, you must satisfy yourself that it is safe for you and for others. You should also ensure that the product will not be damaged or become unsafe by the operation, lubrication, maintenance or repair procedures that you intend to use.

The information, specifications, and illustrations in this publication are on the basis of information that was available at the time that the publication was written. The specifications, torques, pressures, measurements, adjustments, illustrations, and other items can change at any time. These changes can affect the service that is given to the product. Obtain the complete and most current information before you start any job. Caterpillar dealers have the most current information available.

⚠ WARNING

When replacement parts are required for this product Caterpillar recommends using Caterpillar replacement parts or parts with equivalent specifications including, but not limited to, physical dimensions, type, strength and material.

Failure to heed this warning can lead to premature failures, product damage, personal injury or death.

In the United States, the maintenance, replacement, or repair of the emission control devices and systems may be performed by any repair establishment or individual of the owner's choosing.

Table of Contents

Foreword 4

Safety Section

Safety Messages 6

General Hazard Information 10

Burn Prevention 12

Fire Prevention and Explosion Prevention 13

Crushing Prevention and Cutting Prevention 15

Mounting and Dismounting 16

Before Starting Engine 16

Engine Starting 17

Engine Stopping 17

Electrical System 18

Product Information Section

Model Views 20

Product Identification Information 31

Operation Section

Lifting and Storage 33

Gauges and Indicators 35

Features and Controls 36

Engine Starting 38

Engine Operation 42

Engine Stopping 45

Cold Weather Operation 47

Maintenance Section

Refill Capacities 50

Maintenance Recommendations 60

Maintenance Interval Schedule 62

Warranty Section

Warranty Information 106

Reference Information Section

Engine Ratings 107

Customer Service 109

Reference Materials 111

Index Section

Index 116

Foreword

Literature Information

This manual contains safety, operation instructions, lubrication and maintenance information. This manual should be stored in or near the engine area in a literature holder or literature storage area. Read, study and keep it with the literature and engine information.

English is the primary language for all Caterpillar publications. The English used facilitates translation and consistency in electronic media delivery.

Some photographs or illustrations in this manual show details or attachments that may be different from your engine. Guards and covers may have been removed for illustrative purposes. Continuing improvement and advancement of product design may have caused changes to your engine which are not included in this manual. Whenever a question arises regarding your engine, or this manual, please consult with your Caterpillar dealer for the latest available information.

Safety

This safety section lists basic safety precautions. In addition, this section identifies hazardous, warning situations. Read and understand the basic precautions listed in the safety section before operating or performing lubrication, maintenance and repair on this product.

Operation

Operating techniques outlined in this manual are basic. They assist with developing the skills and techniques required to operate the engine more efficiently and economically. Skill and techniques develop as the operator gains knowledge of the engine and its capabilities.

The operation section is a reference for operators. Photographs and illustrations guide the operator through procedures of inspecting, starting, operating and stopping the engine. This section also includes a discussion of electronic diagnostic information.

Maintenance

The maintenance section is a guide to engine care. The illustrated, step-by-step instructions are grouped by fuel consumption, service hours and/or calendar time maintenance intervals. Items in the maintenance schedule are referenced to detailed instructions that follow.

Use fuel consumption or service hours to determine intervals. Calendar intervals shown (daily, annually, etc.) may be used instead of service meter intervals if they provide more convenient schedules and approximate the indicated service meter reading.

Recommended service should be performed at the appropriate intervals as indicated in the Maintenance Interval Schedule. The actual operating environment of the engine also governs the Maintenance Interval Schedule. Therefore, under extremely severe, dusty, wet or freezing cold operating conditions, more frequent lubrication and maintenance than is specified in the Maintenance Interval Schedule may be necessary.

The maintenance schedule items are organized for a preventive maintenance management program. If the preventive maintenance program is followed, a periodic tune-up is not required. The implementation of a preventive maintenance management program should minimize operating costs through cost avoidances resulting from reductions in unscheduled downtime and failures.

Maintenance Intervals

Perform maintenance on items at multiples of the original requirement. Each level and/or individual items in each level should be shifted ahead or back depending upon your specific maintenance practices, operation and application. We recommend that the maintenance schedules be reproduced and displayed near the engine as a convenient reminder. We also recommend that a maintenance record be maintained as part of the engine's permanent record.

See the section in the Operation and Maintenance Manual, “Maintenance Records” for information regarding documents that are generally accepted as proof of maintenance or repair. Your authorized Caterpillar dealer can assist you in adjusting your maintenance schedule to meet the needs of your operating environment.

Overhaul

Major engine overhaul details are not covered in the Operation and Maintenance Manual except for the interval and the maintenance items in that interval. Major repairs are best left to trained personnel or an authorized Caterpillar dealer. Your Caterpillar dealer offers a variety of options regarding overhaul programs. If you experience a major engine failure, there are also numerous after failure overhaul options available from your Caterpillar dealer. Consult with your dealer for information regarding these options.

California Proposition 65 Warning

Diesel engine exhaust and some of its constituents are known to the State of California to cause cancer, birth defects, and other reproductive harm.

Battery posts, terminals and related accessories contain lead and lead compounds. **Wash hands after handling.**

Safety Section

i02639935

Safety Messages

SMCS Code: 1000; 7405

S/N: C6F1-Up

S/N: C7H1-Up

S/N: C6J1-Up

S/N: C6L1-Up

S/N: G7L1-Up

S/N: C6M1-Up

S/N: C6N1-Up

S/N: C8W1-Up

S/N: C7Y1-Up

S/N: C8Y1-Up

There may be several specific safety messages on an engine. The exact location of the hazards and the description of the hazards are reviewed in this section. Please become familiar with all warning signs.

Ensure that all of the warning signs are legible. Clean the warning signs or replace the warning signs if the words cannot be read or if the pictures are not visible. When the warning signs are cleaned, use a cloth, water, and soap. Do not use solvent, gasoline, or other harsh chemicals to clean the warning signs. Solvents, gasoline, or harsh chemicals could loosen the adhesive that secures the warning signs. The warning signs that are loosened could drop off of the engine.

Replace any damaged warning signs or missing warning signs. If a warning sign is attached to a part of the engine that is replaced, install a new warning sign on the replacement part. Any Caterpillar dealer can provide new warning signs.

Do not work on the engine and do not operate the engine unless the instructions and warnings in the Operation and Maintenance Manual are understood. Correct care is your responsibility. Failure to follow the instructions or failure to heed the warnings could result in injury or in death.

The warning labels that may be found on the engine are illustrated.

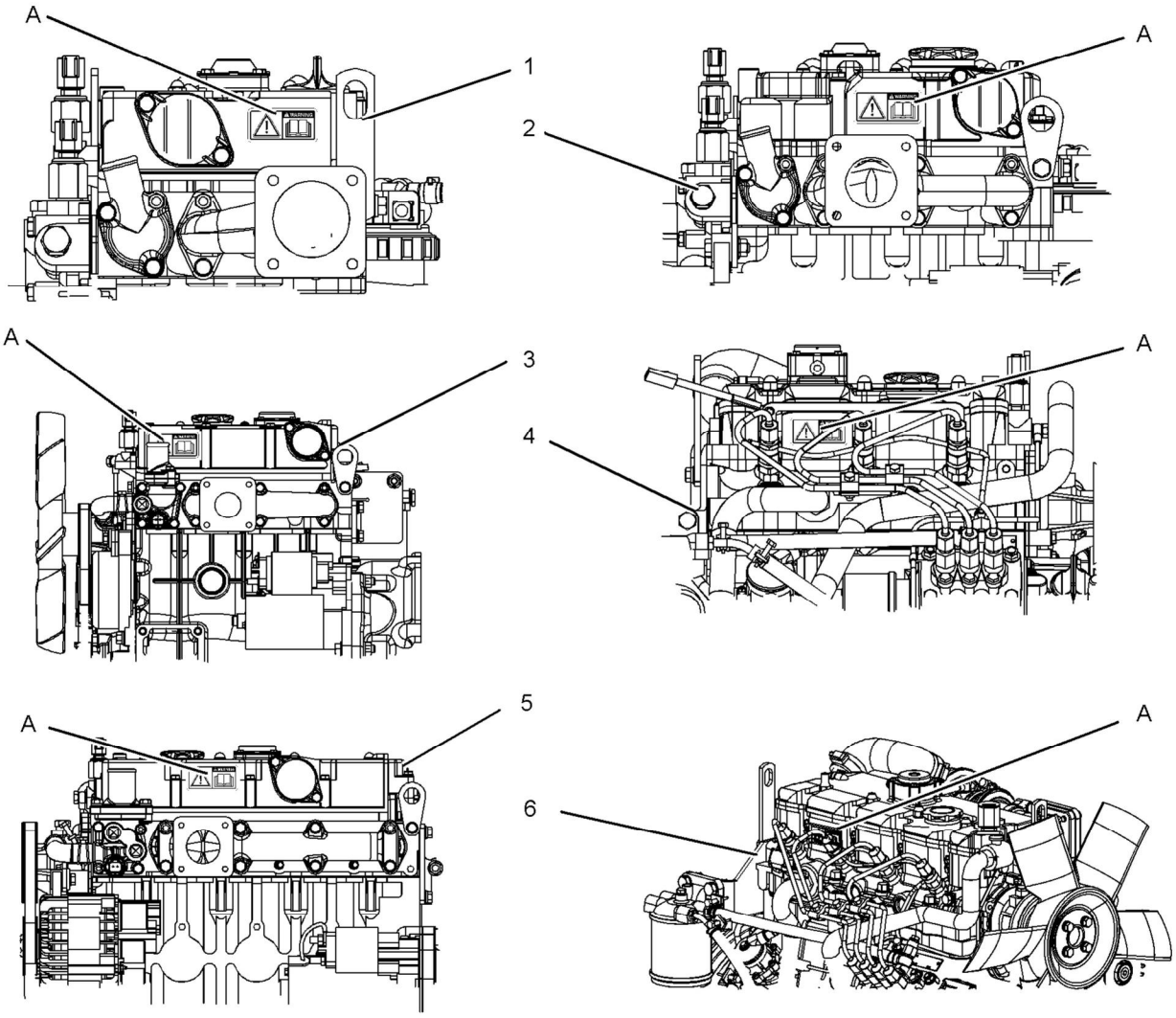

Illustration 1 g01324126

(A) Location of the warning labels
(1) C0.5
(2) C0.7
(3) C1.1
(4) C1.5
(5) C1.6
(6) C2.2

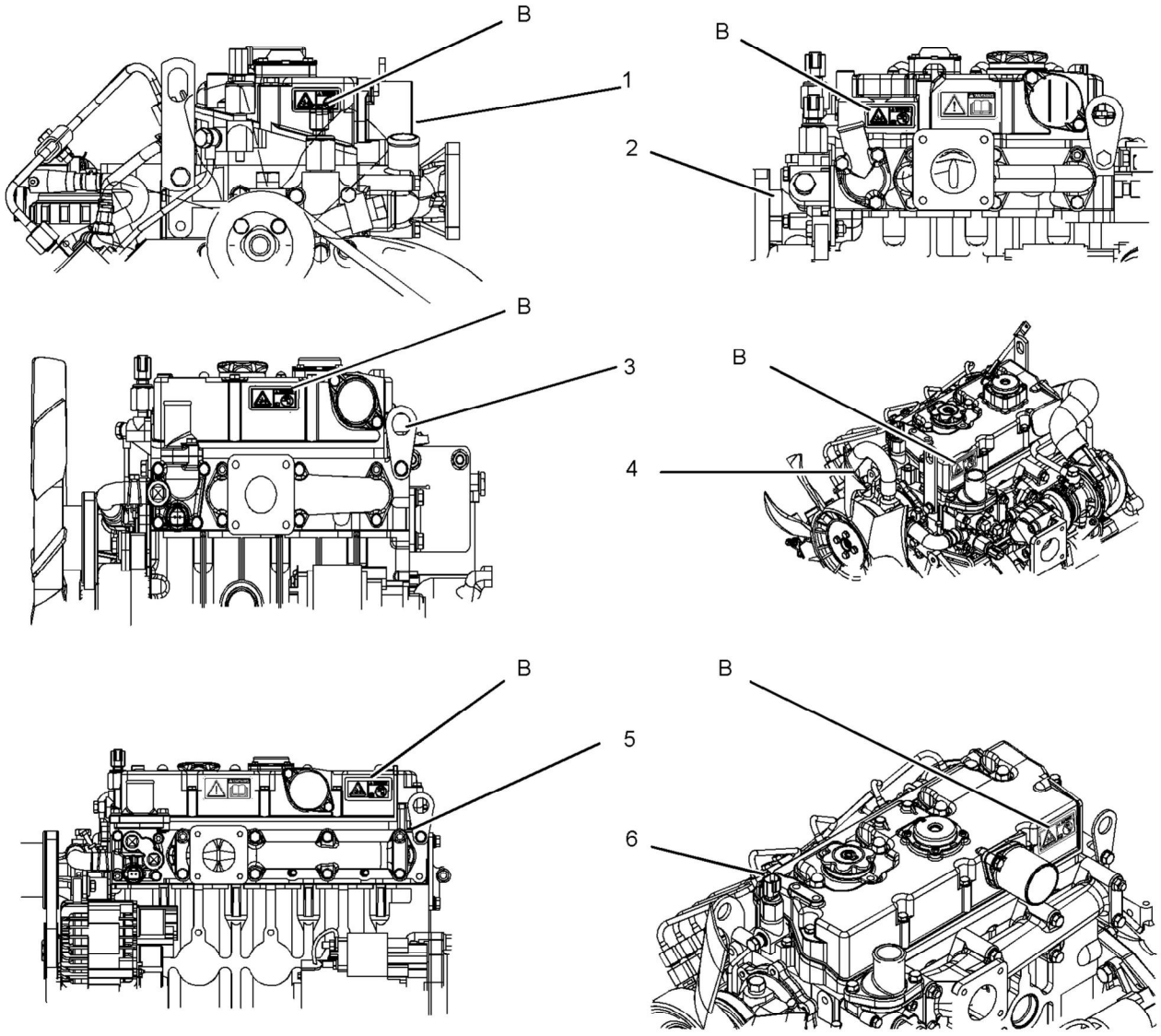

Illustration 2 g01324528

(B) Location of ether warning labels
(1) C0.5
(2) C0.7
(3) C1.1
(4) C1.5
(5) C1.6
(6) C2.2

Universal Warning (A)

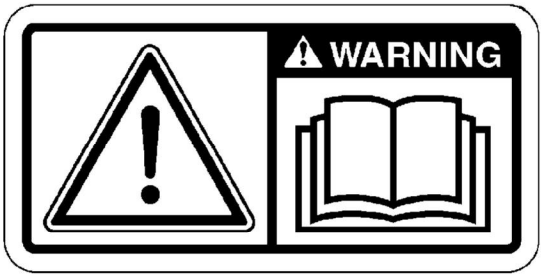

Illustration 3 g01154807

Warning label (A) is installed in different locations. The location will change according to the physical size of the engine. Refer to illustration 1 for the location of the warning labels.

WARNING

Do not operate or work on this equipment unless you have read and understand the instructions and warnings in the Operation and Maintenance Manuals. Failure to follow the instructions or heed the warnings could result in serious injury or death.

No Ether (B)

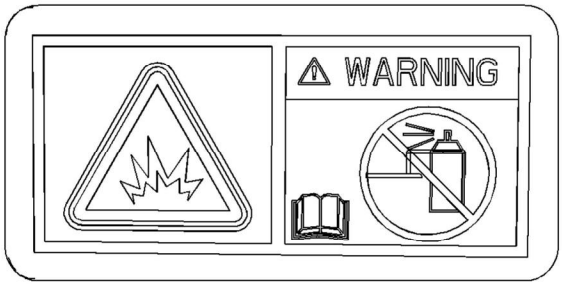

Illustration 4 g01324227

Warning label (B) is installed in different locations. The location will change according to the physical size of the engine. Refer to illustration 2 for the location of the warning labels.

WARNING

Do not use aerosol types of starting aids such as ether. Such use could result in an explosion and personal injury.

i03704500

General Hazard Information

SMCS Code: 1000; 7405

S/N: C6F1-Up

S/N: C7H1-Up

S/N: C6J1-Up

S/N: C6L1-Up

S/N: G7L1-Up

S/N: C6M1-Up

S/N: C6N1-Up

S/N: C8W1-Up

S/N: C7Y1-Up

S/N: C8Y1-Up



Illustration 5 g00104545

Attach a “Do Not Operate” warning tag or a similar warning tag to the start switch or to the controls before the engine is serviced or before the engine is repaired. These warning tags (Special Instruction, SEHS7332) are available from your Caterpillar dealer. Attach the warning tags to the engine and to each operator control station. When it is appropriate, disconnect the starting controls.

Do not allow unauthorized personnel on the engine, or around the engine when the engine is being serviced.

Engine exhaust contains products of combustion which may be harmful to your health. Always start the engine and operate the engine in a well ventilated area. If the engine is in an enclosed area, vent the engine exhaust to the outside.

Cautiously remove the following parts. To help prevent spraying or splashing of pressurized fluids, hold a rag over the part that is being removed.

- Filler caps
- Grease fittings
- Pressure taps
- Breathers
- Drain plugs

Use caution when cover plates are removed. Gradually loosen, but do not remove the last two bolts or nuts that are located at opposite ends of the cover plate or the device. Before removing the last two bolts or nuts, pry the cover loose in order to relieve any spring pressure or other pressure.

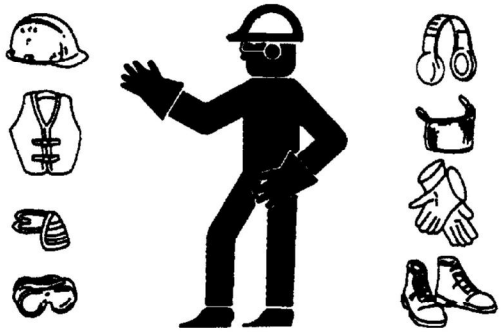

Illustration 6 g00702020

- Wear a hard hat, protective glasses, and other protective equipment, as required.
- When work is performed around an engine that is operating, wear protective devices for ears in order to help prevent damage to hearing.
- Do not wear loose clothing or jewelry that can snag on controls or on other parts of the engine.
- Ensure that all protective guards and all covers are secured in place on the engine.
- Never put maintenance fluids into glass containers. Glass containers can break.
- Use all cleaning solutions with care.
- Report all necessary repairs.

Unless other instructions are provided, perform the maintenance under the following conditions:

- The engine is stopped. Ensure that the engine cannot be started.
- The protective locks or the controls are in the applied position.

- Disconnect the batteries when maintenance is performed or when the electrical system is serviced. Disconnect the battery ground leads. Tape the leads in order to help prevent sparks.
- For initial start-up of a new engine or for starting an engine that has been serviced, make provisions to stop the engine if an overspeed occurs. This may be accomplished by shutting off the fuel supply and/or the air supply to the engine.
- Start the engine with the operator controls. Never short across the starting motor terminals or the batteries. This could bypass the engine neutral start system and/or the electrical system could be damaged.

Pressurized Air and Water

Pressurized air and/or water can cause debris and/or hot water to be blown out. This could result in personal injury.

When pressurized air and/or pressurized water is used for cleaning, wear protective clothing, protective shoes, and eye protection. Eye protection includes goggles or a protective face shield.

The maximum air pressure for cleaning purposes must be below 205 kPa (30 psi) when the air nozzle is deadheaded. The maximum water pressure for cleaning purposes must be below 275 kPa (40 psi).

Fluid Penetration

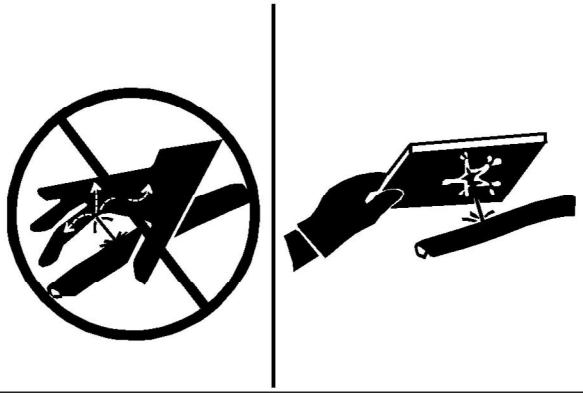

Illustration 7 g00687600

Always use a board or cardboard when you check for a leak. Leaking fluid that is under pressure can penetrate body tissue. Fluid penetration can cause serious injury and possible death. A pin hole leak can cause severe injury. If fluid is injected into your skin, you must get treatment immediately. Seek treatment from a doctor that is familiar with this type of injury.

Containing Fluid Spillage

NOTICE

Care must be taken to ensure that fluids are contained during performance of inspection, maintenance, testing, adjusting and repair of the product. Be prepared to collect the fluid with suitable containers before opening any compartment or disassembling any component containing fluids.

Refer to Special Publication, NENG2500, “Caterpillar Dealer Service Tool Catalog” or refer to Special Publication, PECJ0003, “Caterpillar Shop Supplies and Tools Catalog” for tools and supplies suitable to collect and contain fluids on Caterpillar products.

Dispose of all fluids according to local regulations and mandates.

Asbestos Information

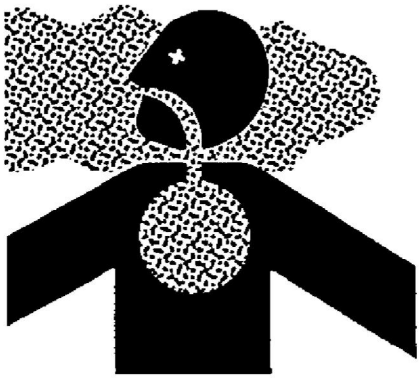

Illustration 8 g00702022

Caterpillar equipment and replacement parts that are shipped from Caterpillar are asbestos free. Caterpillar recommends the use of only genuine Caterpillar replacement parts. Use the following guidelines when you handle any replacement parts that contain asbestos or when you handle asbestos debris.

Use caution. Avoid inhaling dust that might be generated when you handle components that contain asbestos fibers. Inhaling this dust can be hazardous to your health. The components that may contain asbestos fibers are brake pads, brake bands, lining material, clutch plates, and some gaskets. The asbestos that is used in these components is usually bound in a resin or sealed in some way. Normal handling is not hazardous unless airborne dust that contains asbestos is generated.

If dust that may contain asbestos is present, there are several guidelines that should be followed:

- Never use compressed air for cleaning.

- Avoid brushing materials that contain asbestos.
- Avoid grinding materials that contain asbestos.
- Use a wet method in order to clean up asbestos materials.
- A vacuum cleaner that is equipped with a high efficiency particulate air filter (HEPA) can also be used.
- Use exhaust ventilation on permanent machining jobs.
- Wear an approved respirator if there is no other way to control the dust.
- Comply with applicable rules and regulations for the work place. In the United States, use Occupational Safety and Health Administration (OSHA) requirements. These OSHA requirements can be found in “29 CFR 1910.1001”.
- Obey environmental regulations for the disposal of asbestos.
- Stay away from areas that might have asbestos particles in the air.

Lines, Tubes, and Hoses

Do not bend or strike high pressure lines. Do not install lines, tubes, or hoses that are damaged.

Repair any fuel lines, oil lines, tubes, or hoses that are loose or damaged. Leaks can cause fires.

Inspect all lines, tubes and hoses carefully. Do not use bare hands to check for leaks. Always use a board or cardboard for checking engine components for leaks. Tighten all connections to the recommended torque.

Check for the following conditions:

- End fittings that are damaged or leaking
- Outer covering that is chafed or cut
- Wire that is exposed in reinforced hose
- Outer covering that is ballooning locally
- Flexible part of the hose that is kinked or crushed
- Armoring that is embedded in the outer covering

Ensure that all of the clamps, the guards, and the heat shields are installed correctly. This will help to prevent these effects: vibration, rubbing against other parts, and excessive heat during operation.

Dispose of Waste Properly

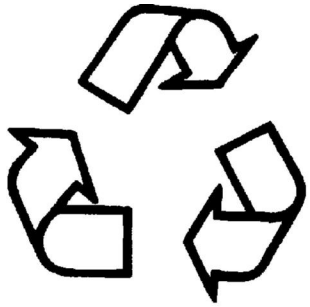

Illustration 9 g00706404

Improperly disposing of waste can threaten the environment. Potentially harmful fluids should be disposed of according to local regulations.

Always use leakproof containers when you drain fluids. Do not pour waste onto the ground, down a drain, or into any source of water.

i01480768

Burn Prevention

SMCS Code: 1000; 7405

S/N: C6F1-Up

S/N: C7H1-Up

S/N: C6J1-Up

S/N: C6L1-Up

S/N: G7L1-Up

S/N: C6M1-Up

S/N: C6N1-Up

S/N: C8W1-Up

S/N: C7Y1-Up

S/N: C8Y1-Up

Do not touch any part of an operating engine. Allow the engine to cool before any maintenance is performed on the engine. Relieve all pressure in the air system, in the hydraulic system, in the lubrication system, in the fuel system, or in the cooling system before any lines, fittings or related items are disconnected.

Coolant

When the engine is at operating temperature, the engine coolant is hot. The coolant is also under pressure. The radiator and all lines to the heaters or to the engine contain hot coolant.

Any contact with hot coolant or with steam can cause severe burns. Allow cooling system components to cool before the cooling system is drained.

Check the coolant level after the engine has stopped and the engine has been allowed to cool.

Ensure that the filler cap is cool before removing the filler cap. The filler cap must be cool enough to touch with a bare hand. Remove the filler cap slowly in order to relieve pressure.

Cooling system conditioner contains alkali. Alkali can cause personal injury. Do not allow alkali to contact the skin, the eyes, or the mouth.

Oils

Hot oil and hot lubricating components can cause personal injury. Do not allow hot oil to contact the skin. Also, do not allow hot components to contact the skin.

Batteries

Electrolyte is an acid. Electrolyte can cause personal injury. Do not allow electrolyte to contact the skin or the eyes. Always wear protective glasses for servicing batteries. Wash hands after touching the batteries and connectors. Use of gloves is recommended.

i03649377

Fire Prevention and Explosion Prevention

SMCS Code: 1000; 7405

S/N: C6F1-Up

S/N: C7H1-Up

S/N: C6J1-Up

S/N: C6L1-Up

S/N: G7L1-Up

S/N: C6M1-Up

S/N: C6N1-Up

S/N: C8W1-Up

S/N: C7Y1-Up

S/N: C8Y1-Up



Illustration 10 g00704000

Use of personal protection equipment (PPE) may be needed.

All fuels, most lubricants, and some coolant mixtures are flammable.

Always perform a Walk-Around Inspection, which may help you identify a fire hazard. Do not operate a product when a fire hazard exists. Contact your Caterpillar dealer for service.

Flammable fluids that are leaking or spilled onto hot surfaces or onto electrical components can cause a fire. Fire may cause personal injury and property damage.

A flash fire may result if the covers for the engine crankcase are removed within fifteen minutes after an emergency shutdown.

Determine whether the engine will be operated in an environment that allows combustible gases to be drawn into the air inlet system. These gases could cause the engine to overspeed. Personal injury, property damage, or engine damage could result.

If the application involves the presence of combustible gases, consult your Caterpillar dealer for additional information about suitable protection devices.

Remove all flammable materials such as fuel, oil, and debris from the engine. Do not allow any flammable materials to accumulate on the engine.

All fluids that are captured in the fluid spill containment basin should be cleaned up immediately. Failure to clean up spilled fluids can cause a fire. Fire may cause personal injury and property damage.

Store fuels and lubricants in properly marked containers away from unauthorized persons. Store oily rags and any flammable materials in protective containers. Do not smoke in areas that are used for storing flammable materials.

Do not expose the engine to any flame.

Exhaust shields (if equipped) protect hot exhaust components from oil or fuel spray in case of a line, a tube, or a seal failure. Exhaust shields must be installed correctly.

Do not weld on lines or tanks that contain flammable fluids. Do not flame cut lines or tanks that contain flammable fluid. Clean any such lines or tanks thoroughly with a nonflammable solvent prior to welding or flame cutting.

Wiring must be kept in good condition. All electrical wires must be properly routed and securely attached. Check all electrical wires daily. Repair any wires that are loose or frayed before you operate the engine. Clean all electrical connections and tighten all electrical connections.

Eliminate all wiring that is unattached or unnecessary. Do not use any wires or cables that are smaller than the recommended gauge. Do not bypass any fuses and/or circuit breakers.

Arcing or sparking could cause a fire. Secure connections, recommended wiring, and properly maintained battery cables will help to prevent arcing or sparking.

Inspect all lines and hoses for wear or for deterioration. The hoses must be properly routed. The lines and hoses must have adequate support and secure clamps. Tighten all connections to the recommended torque. Leaks can cause fires.

Oil filters and fuel filters must be properly installed. The filter housings must be tightened to the proper torque.



Illustration 11 g00704059

Use caution when you are refueling an engine. Do not smoke while you are refueling an engine. Do not refuel an engine near open flames or sparks. Always stop the engine before refueling.

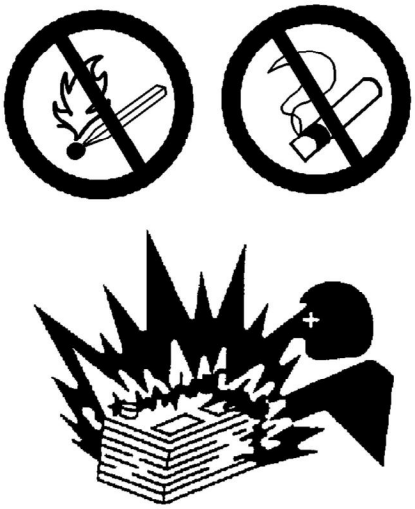

Illustration 12 g00704135

Gases from a battery can explode. Keep any open flames or sparks away from the top of a battery. Do not smoke in battery charging areas.

Never check the battery charge by placing a metal object across the terminal posts. Use a voltmeter or a hydrometer.

Improper jumper cable connections can cause an explosion that can result in injury. Refer to the Operation Section of this manual for specific instructions.

Do not charge a frozen battery. This may cause an explosion.

The batteries must be kept clean. The covers (if equipped) must be kept on the cells. Use the recommended cables, connections, and battery box covers when the engine is operated.

Fire Extinguisher

Make sure that a fire extinguisher is available. Be familiar with the operation of the fire extinguisher. Inspect the fire extinguisher and service the fire extinguisher regularly. Obey the recommendations on the instruction plate.

Ether

Ether is flammable and poisonous.

Use ether in well ventilated areas. Do not smoke while you are replacing an ether cylinder or while you are using an ether spray.

Do not store ether cylinders in living areas or in the engine compartment. Do not store ether cylinders in direct sunlight or in temperatures above 49 °C (120 °F). Keep ether cylinders away from open flames or sparks.

Dispose of used ether cylinders properly. Do not puncture an ether cylinder. Keep ether cylinders away from unauthorized personnel.

Do not spray ether into an engine if the engine is equipped with a thermal starting aid for cold weather starting.

Lines, Tubes and Hoses

Do not bend high pressure lines. Do not strike high pressure lines. Do not install any lines that are bent or damaged.

Repair any lines that are loose or damaged. Leaks can cause fires. Consult your Caterpillar dealer for repair or for replacement parts.

Check lines, tubes and hoses carefully. Do not use your bare hand to check for leaks. Use a board or cardboard to check for leaks. Tighten all connections to the recommended torque.

Replace the parts if any of the following conditions are present:

- End fittings are damaged or leaking.
- Outer coverings are chafed or cut.
- Wires are exposed.
- Outer coverings are ballooning.
- Flexible part of the hoses are kinked.
- Outer covers have embedded armoring.
- End fittings are displaced.

Make sure that all clamps, guards, and heat shields are installed correctly. During engine operation, this will help to prevent vibration, rubbing against other parts, and excessive heat.

i01359666

Crushing Prevention and Cutting Prevention

SMCS Code: 1000; 7405

S/N: C6F1-Up

S/N: C7H1-Up

S/N: C6J1-Up

S/N: C6L1-Up

S/N: G7L1-Up

S/N: C6M1-Up

S/N: C6N1-Up

S/N: C8W1-Up

S/N: C7Y1-Up

S/N: C8Y1-Up

Support the component properly when work beneath the component is performed.

Unless other maintenance instructions are provided, never attempt adjustments while the engine is running.

Stay clear of all rotating parts and of all moving parts. Leave the guards in place until maintenance is performed. After the maintenance is performed, reinstall the guards.

Keep objects away from moving fan blades. The fan blades will throw objects or cut objects.

When objects are struck, wear protective glasses in order to avoid injury to the eyes.

Chips or other debris may fly off objects when objects are struck. Before objects are struck, ensure that no one will be injured by flying debris.

i01372247

Mounting and Dismounting

SMCS Code: 1000; 7405

S/N: C6F1-Up

S/N: C7H1-Up

S/N: C6J1-Up

S/N: C6L1-Up

S/N: G7L1-Up

S/N: C6M1-Up

S/N: C6N1-Up

S/N: C8W1-Up

S/N: C7Y1-Up

S/N: C8Y1-Up

Inspect the steps, the handholds, and the work area before mounting the engine. Keep these items clean and keep these items in good repair.

Mount the engine and dismount the engine only at locations that have steps and/or handholds. Do not climb on the engine, and do not jump off the engine.

Face the engine in order to mount the engine or dismount the engine. Maintain a three-point contact with the steps and handholds. Use two feet and one hand or use one foot and two hands. Do not use any controls as handholds.

Do not stand on components which cannot support your weight. Use an adequate ladder or use a work platform. Secure the climbing equipment so that the equipment will not move.

Do not carry tools or supplies when you mount the engine or when you dismount the engine. Use a hand line to raise and lower tools or supplies.

i03560601

Before Starting Engine

SMCS Code: 1000

S/N: C6F1-Up

S/N: C7H1-Up

S/N: C6J1-Up

S/N: C6L1-Up

S/N: G7L1-Up

S/N: C6M1-Up

S/N: C6N1-Up

S/N: C8W1-Up

S/N: C7Y1-Up

S/N: C8Y1-Up

NOTICE

For initial start-up of a new or rebuilt engine, and for start-up of an engine that has been serviced, make provision to shut the engine off should an overspeed occur. This may be accomplished by shutting off the air and/or fuel supply to the engine.

⚠ WARNING

Engine exhaust contains products of combustion which may be harmful to your health. Always start and operate the engine in a well ventilated area and, if in an enclosed area, vent the exhaust to the outside.

Inspect the engine for potential hazards.

Do not start the engine or move any of the controls if there is a “DO NOT OPERATE” warning tag or similar warning tag attached to the start switch or to the controls.

Before starting the engine, ensure that no one is on, underneath, or close to the engine. Ensure that the area is free of personnel.

If equipped, ensure that the lighting system for the engine is suitable for the conditions. Ensure that all lights work properly, if equipped.

All protective guards and all protective covers must be installed if the engine must be started in order to perform service procedures. To help prevent an accident that is caused by parts in rotation, work around the parts carefully.

Do not bypass the automatic shutoff circuits. Do not disable the automatic shutoff circuits. The circuits are provided in order to help prevent personal injury. The circuits are also provided in order to help prevent engine damage.

See the Service Manual for repairs and for adjustments.

i01185283

Engine Starting

SMCS Code: 1000

S/N: C6F1-Up

S/N: C7H1-Up

S/N: C6J1-Up

S/N: C6L1-Up

S/N: G7L1-Up

S/N: C6M1-Up

S/N: C6N1-Up

S/N: C8W1-Up

S/N: C7Y1-Up

S/N: C8Y1-Up

⚠ WARNING

Do not use aerosol types of starting aids such as ether. Such use could result in an explosion and personal injury.

If a warning tag is attached to the engine start switch or to the controls, DO NOT start the engine or move the controls. Consult with the person that attached the warning tag before the engine is started.

All protective guards and all protective covers must be installed if the engine must be started in order to perform service procedures. To help prevent an accident that is caused by parts in rotation, work around the parts carefully.

Start the engine from the operator's compartment or from the engine start switch.

Always start the engine according to the procedure that is described in the Operation and Maintenance Manual, “Engine Starting” topic in the Operation Section. Knowing the correct procedure will help to prevent major damage to the engine components. Knowing the procedure will also help to prevent personal injury.

To ensure that the jacket water heater (if equipped) and/or the lube oil heater (if equipped) is working properly, check the water temperature gauge and the oil temperature gauge during the heater operation.

Engine exhaust contains products of combustion which can be harmful to your health. Always start the engine and operate the engine in a well ventilated area. If the engine is started in an enclosed area, vent the engine exhaust to the outside.

i01032808

Engine Stopping

SMCS Code: 1000

S/N: C6F1-Up

S/N: C7H1-Up

S/N: C6J1-Up

S/N: C6L1-Up

S/N: G7L1-Up

S/N: C6M1-Up

S/N: C6N1-Up

S/N: C8W1-Up

S/N: C7Y1-Up

S/N: C8Y1-Up

To avoid overheating of the engine and accelerated wear of the engine components, stop the engine according to this Operation and Maintenance Manual, “Engine Stopping” topic (Operation Section).

Use the Emergency Stop Button (if equipped) ONLY in an emergency situation. DO NOT use the Emergency Stop Button for normal engine stopping. After an emergency stop, DO NOT start the engine until the problem that caused the emergency stop has been corrected.

On the initial start-up of a new engine or an engine that has been serviced, make provisions to stop the engine if an overspeed condition occurs. This may be accomplished by shutting off the fuel supply and/or the air supply to the engine.

i02613441

Electrical System

SMCS Code: 1000; 1400

S/N: C6F1-Up

S/N: C7H1-Up

S/N: C6J1-Up

S/N: C6L1-Up

S/N: G7L1-Up

S/N: C6M1-Up

S/N: C6N1-Up

S/N: C8W1-Up

S/N: C7Y1-Up

S/N: C8Y1-Up

Never disconnect any charging unit circuit or battery circuit cable from the battery when the charging unit is operating. A spark can cause the combustible gases that are produced by some batteries to ignite.

To help prevent sparks from igniting combustible gases that are produced by some batteries, the negative “−” jump start cable should be connected last from the external power source to the negative “−” terminal of the starting motor. If the starting motor is not equipped with a negative “−” terminal, connect the jump start cable to the engine block.

Check the electrical wires daily for wires that are loose or frayed. Tighten all loose electrical wires before the engine is started. Repair all frayed electrical wires before the engine is started. See this Operation and Maintenance Manual for specific starting instructions.

Grounding Practices

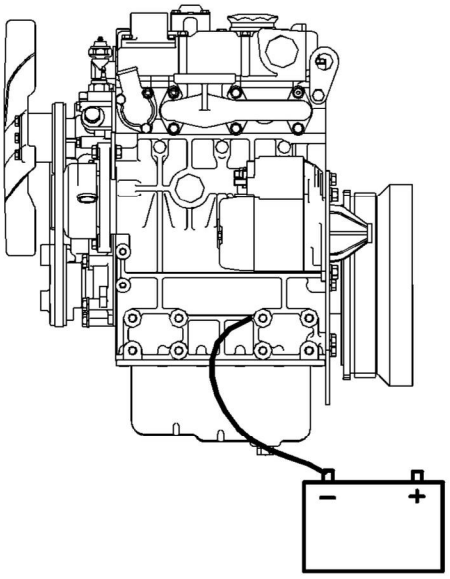

Illustration 13 g01308335

Typical example

Ground to battery

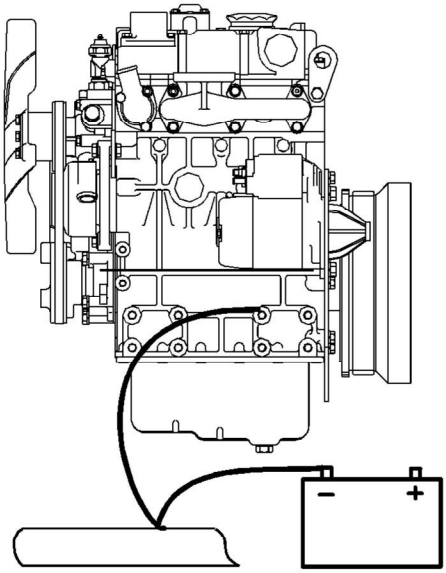

Illustration 14 g01308337

Typical example

Alternate Ground to frame

Correct grounding for the engine electrical system is necessary for optimum engine performance and reliability. Incorrect grounding will result in uncontrolled electrical circuit paths and in unreliable electrical circuit paths.

Uncontrolled electrical circuit paths can result in damage to main bearings, to crankshaft bearing journal surfaces, and to aluminum components.

Engines that are installed without engine-to-frame ground straps can be damaged by electrical discharge.

To ensure that the engine and the engine electrical systems function correctly, an engine-to-frame ground strap with a direct path to the battery must be used. This path may be provided by way of a starting motor ground, or a starting motor ground to the frame.

All grounds should be tight and free of corrosion. The engine alternator must be grounded to the negative “-” battery terminal with a wire that is adequate to handle the full charging current of the alternator.

Product Information Section

Model Views

i02613456

Model View Illustrations

SMCS Code: 1000

S/N: C6F1-Up

S/N: C7H1-Up

S/N: C6J1-Up

S/N: C6L1-Up

S/N: G7L1-Up

S/N: C6M1-Up

S/N: C6N1-Up

S/N: C8W1-Up

S/N: C7Y1-Up

S/N: C8Y1-Up

The following model views show typical features of the C0.5, C0.7, C1.1, C1.5, C1.6 and C2.2 Engines. Due to individual applications, your engine may appear different from the illustrations.

Note: Individual components are detailed on the C2.2 turbocharged engine only.

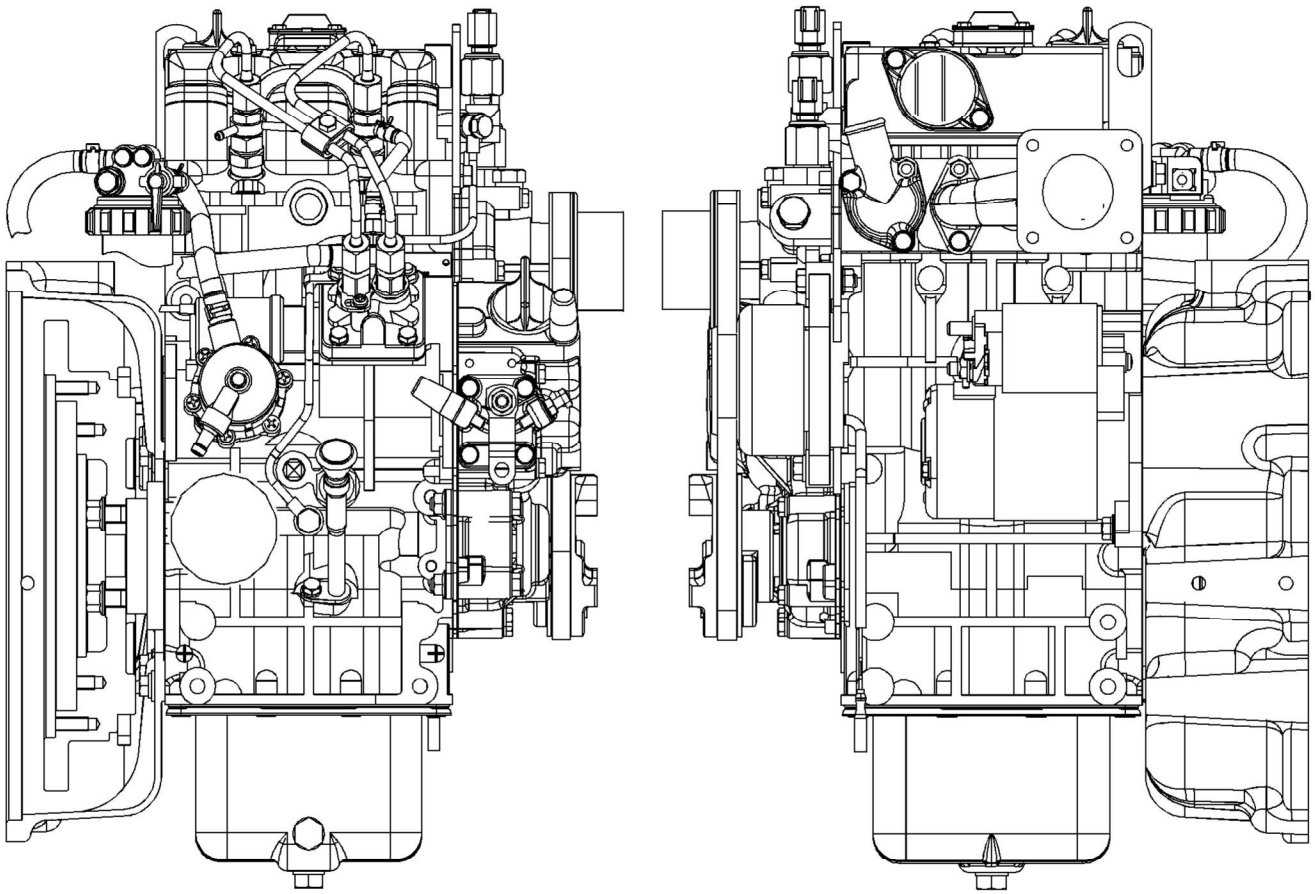

g01299985

Illustration 15

Typical view of the C0.5 Engine

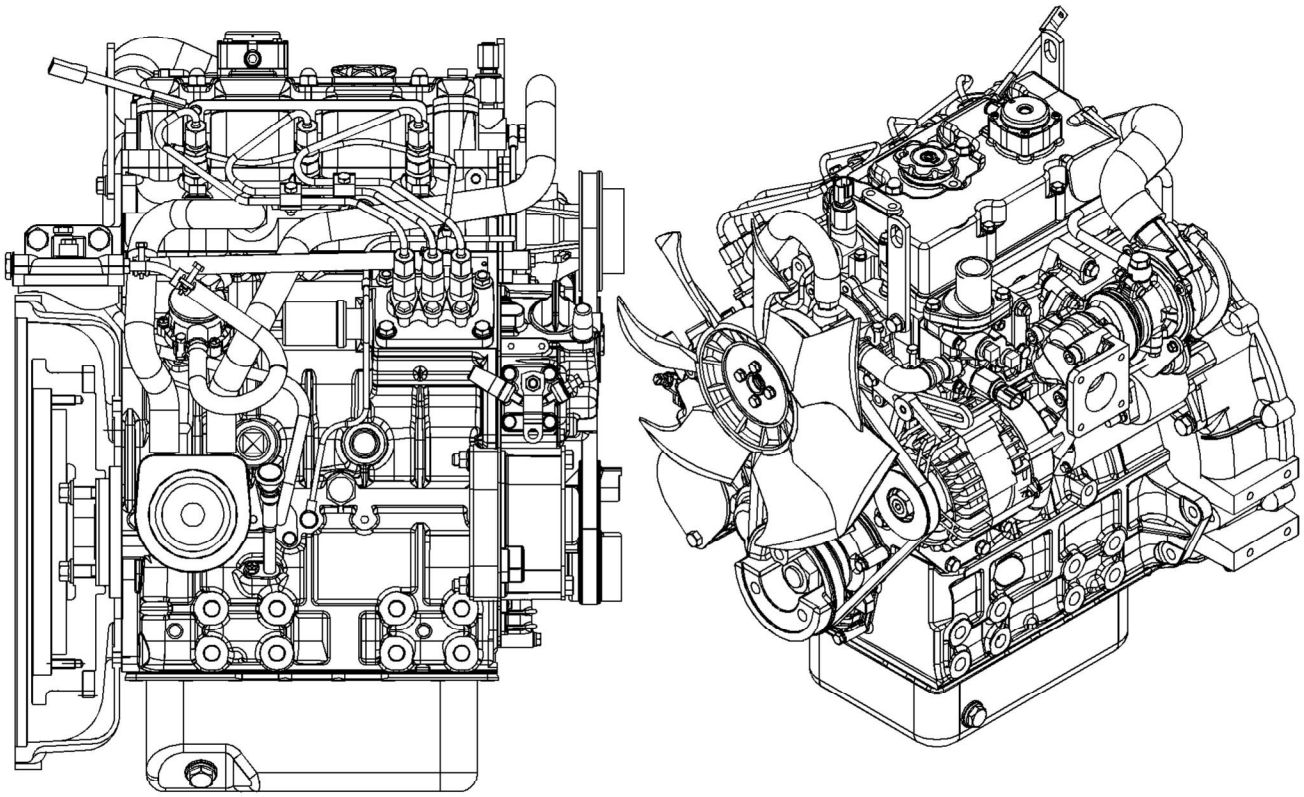

Illustration 16 g01300431

Typical view of the C1.5 turbocharged engine

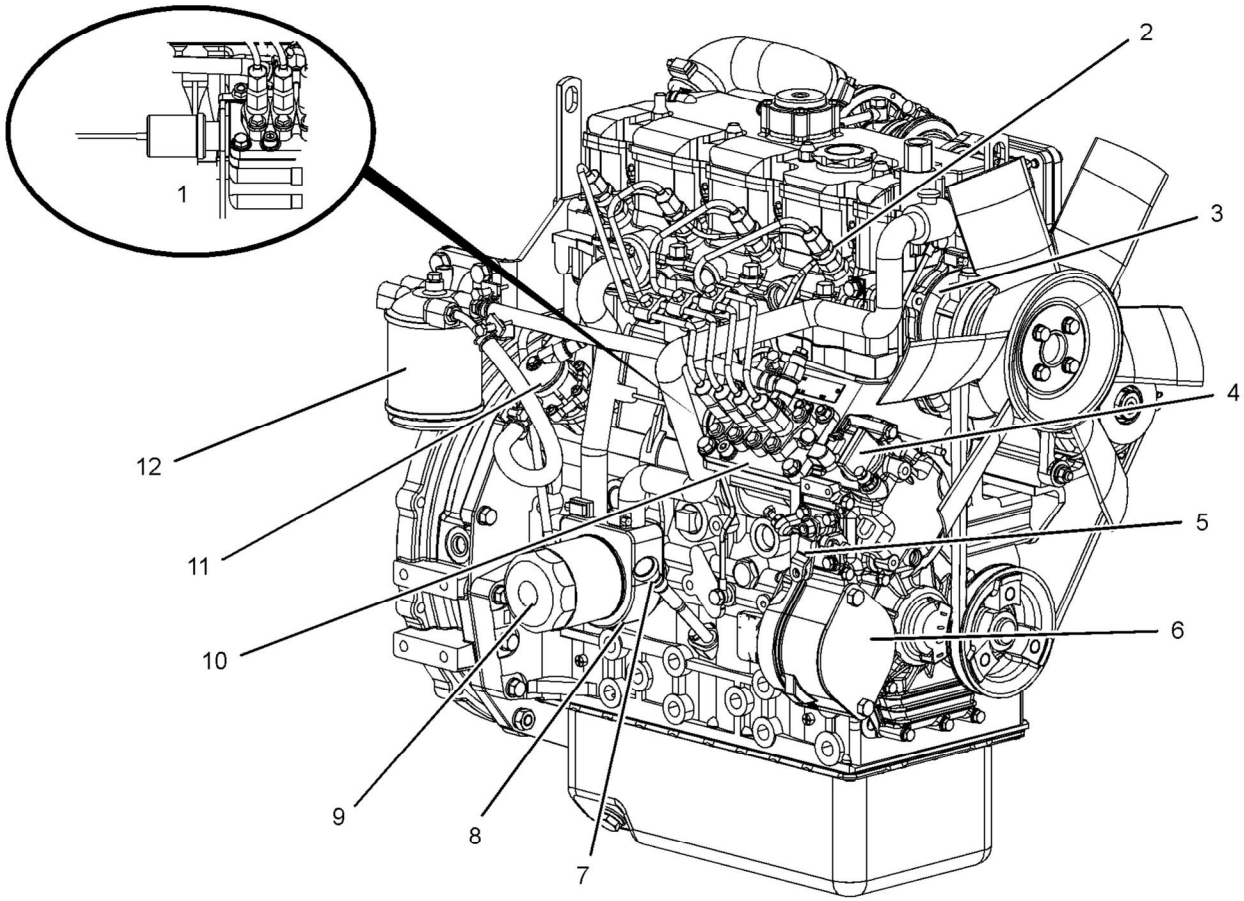

g01304893

Illustration 17

Right side view of the C2.2 turbocharged engine

(1) Fuel shutoff solenoid
(2) Number one fuel injector
(3) Water pump
(4) Lower engine oil filler cap
(5) Throttle lever
(6) Cover plate for the accessory drive
(7) Engine oil level gauge
(8) Engine oil cooler
(9) Engine oil filter
(10) Fuel injection pump
(11) Transfer pump
(12) Fuel filter

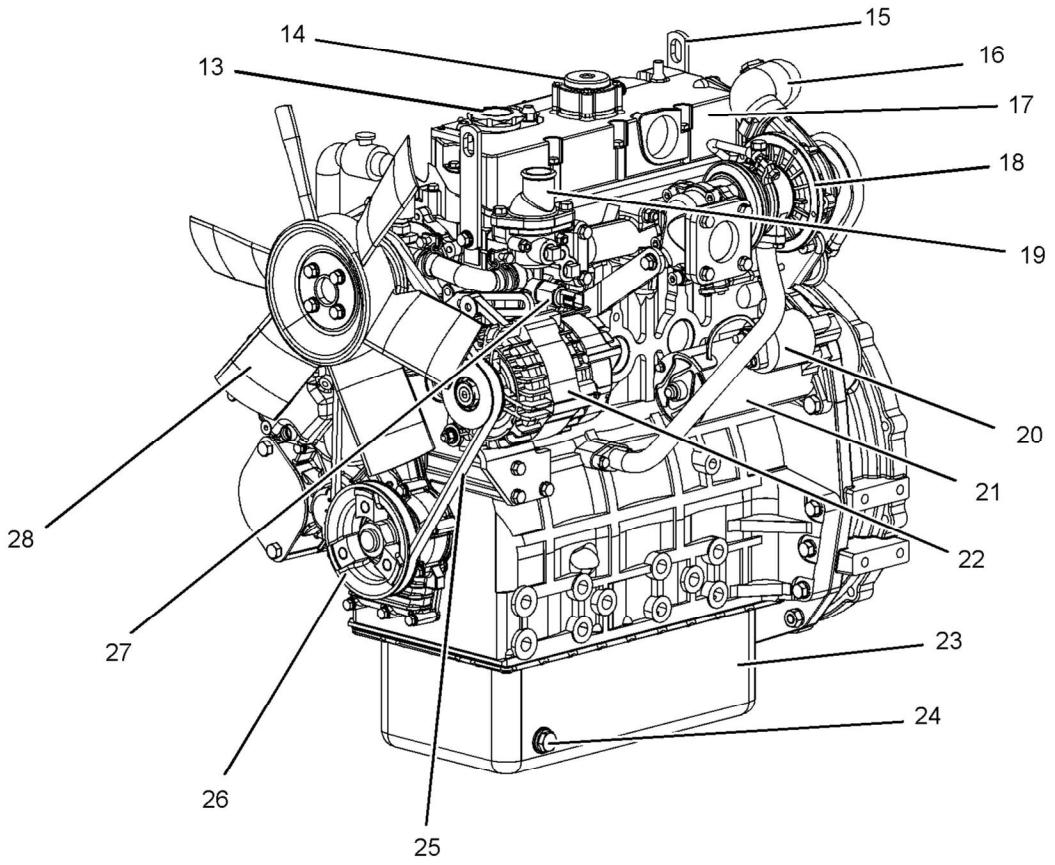

g01305224

Illustration 18

Left side view of the C2.2 Engine

(13) Top engine oil filler cap
(14) Crankcase breather
(15) Rear Lifting eye
(16) Air inlet elbow
(17) Valve mechanism cover
(18) Turbocharger
(19) Water temperature regulator housing
(20) Starting motor solenoid
(21) Electric starting motor
(22) Alternator
(23) Engine oil pan
(24) Engine oil drain plug
(25) Fan drive belt
(26) Crankshaft pulley
(27) Coolant temperature switch
(28) Cooling fan

i02613886

Engine Description

SMCS Code: 1000

S/N: C6F1-Up

S/N: C7H1-Up

S/N: C6J1-Up

S/N: C6L1-Up

S/N: G7L1-Up

S/N: C6M1-Up

S/N: C6N1-Up

S/N: C8W1-Up

S/N: C7Y1-Up

S/N: C8Y1-Up

The C0.5, C0.7, C1.1, C1.5, C1.6 and C2.2 engines are direct injection engines. The engines are controlled with a mechanically actuated fuel injection pump. The engine cylinders are arranged in-line.

The cylinder head assembly has one inlet valve and one exhaust valve for each cylinder. Each cylinder valve has a single valve spring.

The pistons have two compression rings and an oil control ring. It is important to ensure the correct piston height so that the piston does not contact the cylinder head. The correct piston height also ensures efficient combustion of fuel that is necessary in order to conform to requirements for emissions.

The crankshaft for a two cylinder engine has two main bearing journals. The crankshaft for a three cylinder engine has four main bearing journals. The crankshaft for a four cylinder engine has five main bearing journals. End play is controlled by the thrust washers that are located on the rear main bearing.

The timing gears are stamped with timing marks in order to ensure the correct assembly of the gears. When the No. 1 piston is at top center compression stroke, the teeth that are stamped on the crankshaft gear and the camshaft gear will be in alignment with the idler gear.

The crankshaft gear turns the idler gear which then turns the camshaft gear and the gear for the engine oil pump.

The fuel injection pump is mounted in the cylinder block. The fuel injection pump is operated by lobes on the camshaft. The fuel transfer pump is located on the right hand side of the cylinder block. The fuel transfer pump is also operated by lobes on the camshaft.

The fuel injection pump conforms to requirements for emissions. If any adjustments to the fuel injection pump timing and high idle are required you must refer to your Caterpillar dealer. Some fuel injection pumps have mechanical governors that control the engine rpm. Some fuel injection pumps have a governor that is electrically controlled.

A gerotor oil pump is located in the center of the idler gear. The engine oil pump sends lubricating oil to the main oil gallery through a pressure relief valve and an engine oil filter. The rocker arms receive pressurized oil through an externally located oil line that runs from the main oil gallery to the cylinder head.

Coolant from the bottom of the radiator passes through the belt driven centrifugal water pump. The coolant is cooled by the radiator and the temperature is regulated by a water temperature regulator.

Engine efficiency, efficiency of emission controls, and engine performance depend on adherence to proper operation and maintenance recommendations. Engine performance and efficiency also depend on the use of recommended fuels, lubrication oils, and coolants. Refer to this Operation and Maintenance Manual, “Maintenance Interval Schedule” for more information on maintenance items.

Engine Specifications

Note: The front end of the engine is opposite the flywheel end of the engine. The left and the right side of the engine are determined from the flywheel end. The No. 1 cylinder is the front cylinder.

C0.5 Engine

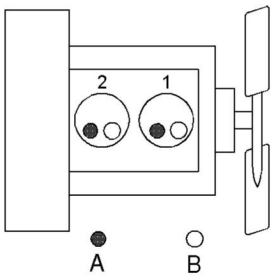

Illustration 19 g01108476

(A) Exhaust valves
(B) Inlet valves

Table 1

C0.5 Engine Specifications	
Maximum Operating Speed (rpm)	3600 rpm
Cylinders and Arrangement	In-Line two cylinder
Bore	67 mm (2.64 inch)
Stroke	72 mm (2.83 inch)
Displacement	0.507 L (30.9390 in^3)
Aspiration	NA(1)
Compression Ratio	23.5:1
Firing Order	1-2
Rotation that is viewed from the flywheel	Counterclockwise
Valve Lash Setting (Inlet)	0.20 mm (0.008 inch)
Valve Lash Setting (Exhaust)	0.20 mm (0.008 inch)
Injection	Indirect

(1) Naturally Aspirated

C0.7 Engine

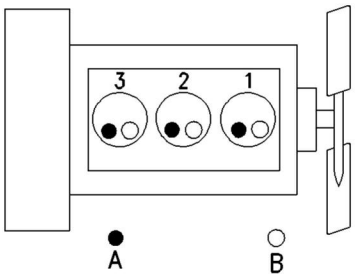

Illustration 20 g00852304

(A) Exhaust valves
(B) Inlet valves

Table 2

C0.7 Engine Specifications	
Maximum Operating Speed (rpm)	3600 rpm
Cylinders and Arrangement	In-Line three cylinder
Bore	67 mm (2.64 inch)
Stroke	72 mm (2.83 inch)
Displacement	0.762 L (46.5001 in^3)
Aspiration	NA(1)
Compression Ratio	23.5:1
Firing Order	1-2-3
Rotation that is viewed from the flywheel	Counterclockwise
Valve Lash Setting (Inlet)	0.20 mm (0.008 inch)
Valve Lash Setting (Exhaust)	0.20 mm (0.008 inch)
Injection	Indirect

(1) Naturally Aspirated

C1.1 Engine

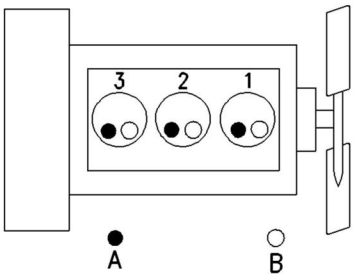

Illustration 21 g00852304

(A) Exhaust valves
(B) Inlet valves

Table 3

C1.1 Engine Specifications	
Maximum Operating Speed (rpm)	3600 rpm
Cylinders and Arrangement	In-Line three cylinder
Bore	77 mm (3.03 inch)
Stroke	81 mm (3.19 inch)
Displacement	1.131 L (69.0178 in^3)
Aspiration	NA(1)
Compression Ratio	23:1
Firing Order	1-2-3
Rotation that is viewed from the flywheel	Counterclockwise
Valve Lash Setting (Inlet)	0.20 mm (0.008 inch)
Valve Lash Setting (Exhaust)	0.20 mm (0.008 inch)
Injection	Indirect

(1) Naturally Aspirated

C1.5 Engine

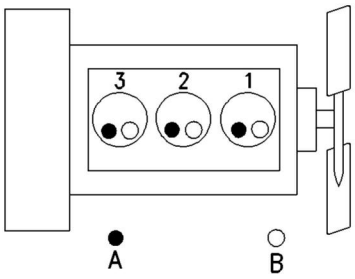

Illustration 22 g00852304

(A) Exhaust valves
(B) Inlet valves

Table 4

C1.5 Engine Specifications	
Maximum Operating Speed (rpm)	3000 rpm
Cylinders and Arrangement	In-Line three cylinder
Bore	84 mm (3.31 inch)
Stroke	90 mm (3.54 inch)
Displacement	1.496 L (91.2915 in^3)
Aspiration	NA(1)
Compression Ratio	22.5:1
Firing Order	1-2-3
Rotation that is viewed from the flywheel	Counterclockwise
Valve Lash Setting (Inlet)	0.20 mm (0.008 inch)
Valve Lash Setting (Exhaust)	0.20 mm (0.008 inch)
Injection	Indirect

(1) Naturally Aspirated

C1.5 Turbocharged Engine

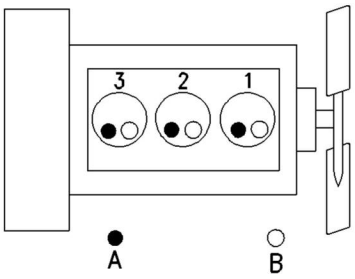

Illustration 23 g00852304

(A) Exhaust valves
(B) Inlet valves

Table 5

C1.5 Turbocharged Engine Specifications	
Maximum Operating Speed (rpm)	3000 rpm
Cylinders and Arrangement	In-Line three cylinder
Bore	84 mm (3.31 inch)
Stroke	90 mm (3.54 inch)
Displacement	1.496 L (91.2915 in^3)
Aspiration	T(1)
Compression Ratio	22.5:1
Firing Order	1-2-3
Rotation that is viewed from the flywheel	Counterclockwise
Valve Lash Setting (Inlet)	0.20 mm (0.008 inch)
Valve Lash Setting (Exhaust)	0.20 mm (0.008 inch)
Injection	Indirect

(1) Turbocharged

C1.6 Engine

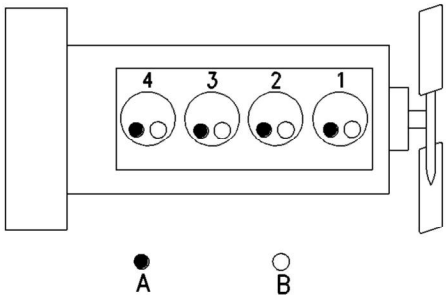

Illustration 24 g00296424

(A) Exhaust valves
(B) Inlet valves

Table 6

C1.6 Engine Specifications	
Maximum Operating Speed (rpm)	3000 rpm
Cylinders and Arrangement	In-Line four cylinder
Bore	77 mm (3.03 inch)
Stroke	81 mm (3.19 inch)
Displacement	1.508 L (92.0238 in^3)
Aspiration	NA(1)
Compression Ratio	23.5:1
Firing Order	1-3-4-2
Rotation that is viewed from the flywheel	Counterclockwise
Valve Lash Setting (Inlet)	0.20 mm (0.008 inch)
Valve Lash Setting (Exhaust)	0.20 mm (0.008 inch)
Injection	Indirect

(1) Naturally Aspirated

C2.2 Engine

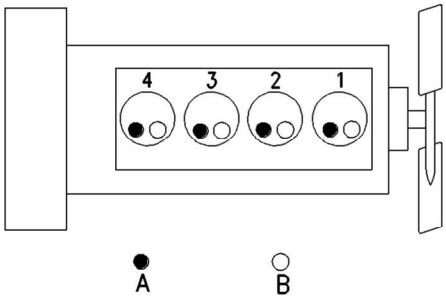

Illustration 25 g00296424

(A) Exhaust valves
(B) Inlet valves

Table 7

C2.2 Engine Specifications	
Maximum Operating Speed (rpm)	3000 rpm
Cylinders and Arrangement	In-Line four cylinder
Bore	84.0 mm (3.31 inch)
Stroke	100.0 mm (3.94 inch)
Displacement	2.216 cc (0.1352 in^3)
Aspiration	NA(1)
Compression Ratio	23.3:1
Firing Order	1-3-4-2
Rotation that is viewed from the flywheel	Counterclockwise
Valve Lash Setting (Inlet)	0.20 mm (0.008 inch)
Valve Lash Setting (Exhaust)	0.20 mm (0.008 inch)
Injection	Indirect

(1) Naturally Aspirated

C2.2 Turbocharged Engine

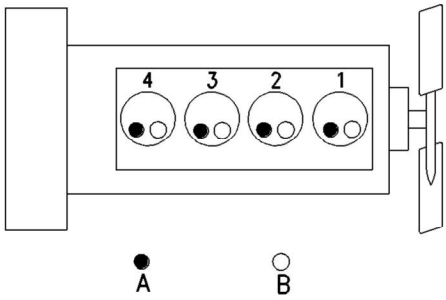

Illustration 26 g00296424

(A) Exhaust valves
(B) Inlet valves

Table 8

C2.2 Turbocharged Engine Specifications	
Maximum Operating Speed (rpm)	3000 rpm
Cylinders and Arrangement	In-Line four cylinder
Bore	84.0 mm (3.31 inch)
Stroke	100.0 mm (3.94 inch)
Displacement	2.216 cc (0.1352 in^3)
Aspiration	T(1)
Compression Ratio	23.5:1
Firing Order	1-3-4-2
Rotation that is viewed from the flywheel	Counterclockwise
Valve Lash Setting (Inlet)	0.20 mm (0.008 inch)
Valve Lash Setting (Exhaust)	0.20 mm (0.008 inch)
Injection	Indirect

(1) Turbocharged

C2.2 Turbocharged Aftercooled Engine

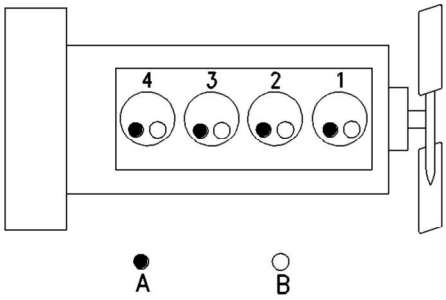

Illustration 27 g00296424

(A) Exhaust valves
(B) Inlet valves

Table 9

C2.2 Turbocharged Aftercooled Engine Specifications	
Maximum Operating Speed (rpm)	2800 rpm
Cylinders and Arrangement	In-Line four cylinder
Bore	84.0 mm (3.31 inch)
Stroke	100.0 mm (3.94 inch)
Displacement	2.216 cc (0.1352 in^3)
Aspiration	TA(1)
Compression Ratio	23.5:1
Firing Order	1-3-4-2
Rotation that is viewed from the flywheel	Counterclockwise
Valve Lash Setting (Inlet)	0.20 mm (0.008 inch)
Valve Lash Setting (Exhaust)	0.20 mm (0.008 inch)
Injection	Indirect

(1) Turbocharged aftercooled

Product Identification Information

i02656316

Plate Locations and Film Locations

SMCS Code: 1000

S/N: C6F1-Up

S/N: C7H1-Up

S/N: C6J1-Up

S/N: C6L1-Up

S/N: G7L1-Up

S/N: C6M1-Up

S/N: C6N1-Up

S/N: C8W1-Up

S/N: C7Y1-Up

S/N: C8Y1-Up

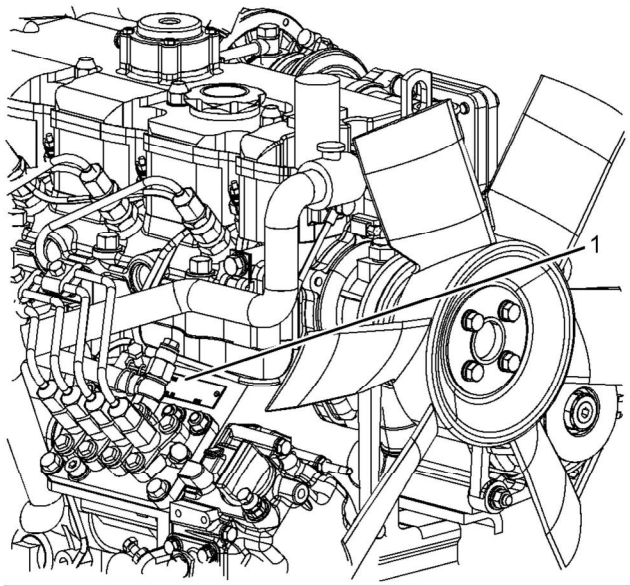

g01334490

Illustration 28

Typical example

Caterpillar engines are identified by serial numbers and by arrangement numbers. These numbers are shown on the engine serial number plate. Caterpillar dealers need these numbers in order to determine the components that were included with the engine. This permits accurate identification of replacement part numbers.

Serial Number Plate (1)

The engine serial number plate is located on the upper right side of the engine block above the fuel injection pump for all engine models in the series.

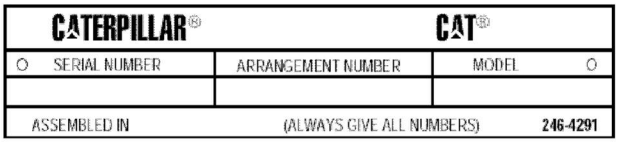

g01131696

Illustration 29

Serial number plate

i00610276

Reference Numbers

SMCS Code: 1000

S/N: C6F1-Up

S/N: C7H1-Up

S/N: C6J1-Up

S/N: C6L1-Up

S/N: G7L1-Up

S/N: C6M1-Up

S/N: C6N1-Up

S/N: C8W1-Up

S/N: C7Y1-Up

S/N: C8Y1-Up

Information for the following items may be needed to order parts. Locate the information for your engine. Record the information on the appropriate space. Make a copy of this list for a record. Retain the information for future reference.

Record for Reference

Engine Model _____

Engine Serial No. _____

Engine Arrangement No. _____

Modification No. _____

Engine Low Idle rpm _____

Engine Full Load rpm _____

Performance Specification No. _____

Primary Fuel Filter No. _____

Water Separator Element No. _____

Secondary Fuel Filter Element No. _____

Lubrication Oil Filter Element No. _____

Auxiliary Oil Filter Element No. _____

Supplemental Coolant Additive Maintenance Element No. (Optional) _____

Total Lubrication System Capacity _____

Total Cooling System Capacity _____

Air Cleaner Element No. _____

Fan Drive Belt No. _____

Alternator Belt No. _____

i03021226

Emissions Certification Film

SMCS Code: 1000; 7405

S/N: C6F1-Up

S/N: C7H1-Up

S/N: C6J1-Up

S/N: C6L1-Up

S/N: G7L1-Up

S/N: C6M1-Up

S/N: C6N1-Up

S/N: C8W1-Up

S/N: C7Y1-Up

S/N: C8Y1-Up

Note: This information is pertinent in the United States and in Canada.

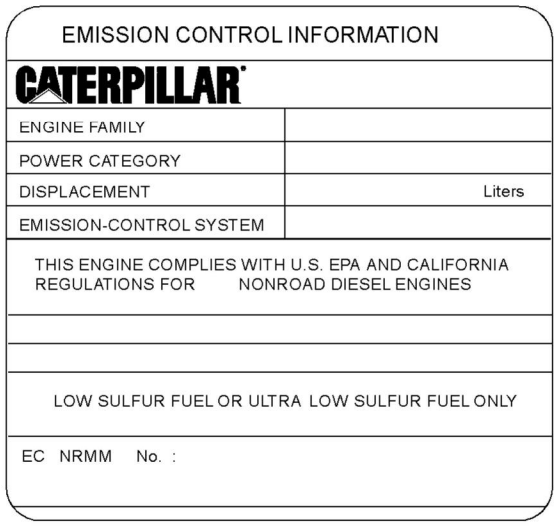

Illustration 30 g01527177

Typical example

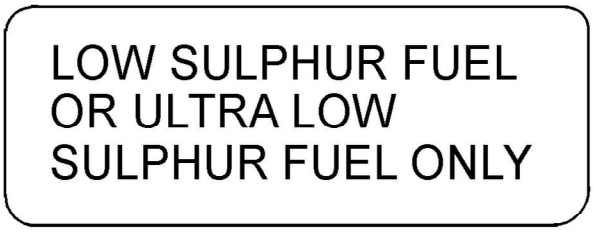

Illustration 31 g01476654

Typical example

The fuel label is supplied with the engine. Refer to illustration 31. The equipment manufacturer must install the label to the equipment. The label must be attached to the equipment near the fuel inlet. This will comply with the EPA regulations. For more information, contact your Caterpillar dealer.

Operation Section

Lifting and Storage

i02663683

Product Lifting

SMCS Code: 1000; 1404; 7002

S/N: C6F1-Up

S/N: C7H1-Up

S/N: C6J1-Up

S/N: C6L1-Up

S/N: G7L1-Up

S/N: C6M1-Up

S/N: C6N1-Up

S/N: C8W1-Up

S/N: C7Y1-Up

S/N: C8Y1-Up

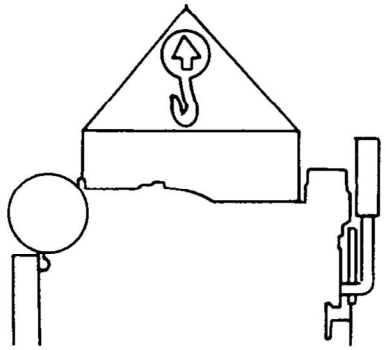

Illustration 32 g00103219

NOTICE

Never bend the eyebolts and the brackets. Only load the eyebolts and the brackets under tension. Remember that the capacity of an eyebolt is less as the angle between the supporting members and the object becomes less than 90 degrees.

When it is necessary to remove a component at an angle, only use a link bracket that is properly rated for the weight.

Use a hoist to remove heavy components. Use an adjustable lifting beam to lift the engine. All supporting members (chains and cables) should be parallel to each other. The chains and cables should be perpendicular to the top of the object that is being lifted.

Some removals require lifting the fixtures in order to obtain proper balance and safety.

To remove the engine only, use the lifting eyes that are on the engine.

Lifting eyes are designed and installed for the specific engine arrangement. Alterations to the lifting eyes and/or the engine make the lifting eyes and the lifting fixtures obsolete. If alterations are made, ensure that proper lifting devices are provided. Consult your Caterpillar dealer for information regarding fixtures for proper engine lifting.

i02512528

Product Storage

SMCS Code: 1000; 1404; 7002

S/N: C6F1-Up

S/N: C7H1-Up

S/N: C6J1-Up

S/N: C6L1-Up

S/N: G7L1-Up

S/N: C6M1-Up

S/N: C6N1-Up

S/N: C8W1-Up

S/N: C7Y1-Up

S/N: C8Y1-Up

If the engine will not be started for several weeks, the lubricating oil will drain from the cylinder walls and from the piston rings. Rust can form on the cylinder liner surface. Rust on the cylinder liner surface will cause increased engine wear and a reduction in engine service life.

To help prevent excessive engine wear, use the following guidelines:

- Complete all of the lubrication recommendations that are listed in this Operation and Maintenance Manual, “Maintenance Interval Schedule” (Maintenance Section).

- If freezing temperatures are expected, check the cooling system for adequate protection against freezing. See this Operation and Maintenance Manual, “Refill Capacities and Recommendations” (Maintenance Section).

If an engine is out of operation and if use of the engine is not planned, special precautions should be made. If the engine will be stored for more than one month, a complete protection procedure is recommended.

For more detailed information on engine storage, see Special Instruction, SEHS9031, “Storage Procedure For Caterpillar Products”.

Your Caterpillar dealer can assist in preparing the engine for extended storage periods.

Gauges and Indicators

i01139916

Gauges and Indicators

SMCS Code: 1900; 7450

S/N: C6F1-Up

S/N: C7H1-Up

S/N: C6J1-Up

S/N: C6L1-Up

S/N: G7L1-Up

S/N: C6M1-Up

S/N: C6N1-Up

S/N: C8W1-Up

S/N: C7Y1-Up

S/N: C8Y1-Up

Your engine may not have the same gauges or all of the gauges that are described. For more information about the gauge package, see the OEM information.

Gauges provide indications of engine performance. Ensure that the gauges are in good working order. Determine the normal operating range by observing the gauges over a period of time.

Noticeable changes in gauge readings indicate potential gauge or engine problems. Problems may also be indicated by gauge readings that change even if the readings are within specifications. Determine and correct the cause of any significant change in the readings. Consult your Caterpillar dealer for assistance.

NOTICE
If no oil pressure is indicated, STOP the engine. If maximum coolant temperature is exceeded, STOP the engine. Engine damage can result.



Engine Oil Pressure – The oil pressure should be greatest after a cold engine is started. The typical engine oil pressure with SAE10W30 is 207 to 413 kPa (30 to 60 psi) at rated rpm.

A lower oil pressure is normal at low idle. If the load is stable and the gauge reading changes, perform the following procedure:

1. Remove the load.
2. Reduce engine speed to low idle.
3. Check and maintain the oil level.



Jacket Water Coolant Temperature – Typical temperature range is 71 to 96°C (160 to 205°F). The maximum allowable temperature with the pressurized cooling system at 48 kPa (7 psi) is 103°C (217°F). Higher temperatures may occur under certain conditions. The water temperature reading may vary according to load. The reading should never exceed the boiling point for the pressurized system that is being used.

If the engine is operating above the normal range and steam becomes apparent, perform the following procedure:

1. Reduce the load and the engine rpm.
2. Inspect the cooling system for leaks.
3. Determine if the engine must be shut down immediately or if the engine can be cooled by reducing the load.



Tachometer – This gauge indicates engine speed (rpm). When the throttle control lever is moved to the full throttle position without load, the engine is running at high idle. The engine is running at the full load rpm when the throttle control lever is at the full throttle position with maximum rated load.

NOTICE
To help prevent engine damage, never exceed the high idle rpm. Overspeeding can result in serious damage to the engine. The engine can be operated at high idle without damage, but should never be allowed to exceed high idle rpm.

Note: The high idle rpm and the full load rpm are stamped on the Information Plate.



Ammeter – This gauge indicates the amount of charge or discharge in the battery charging circuit. Operation of the indicator should be to the right side of “0”(zero).



Fuel Level – This gauge indicates the fuel level in the fuel tank. The electrically operated fuel level gauge only registers when the “START/STOP” switch is “ON”.



Service Hour Meter – This gauge indicates the total number of clock hours that the engine has operated.

Features and Controls

i01007515

Engine Shutoffs and Engine Alarms

SMCS Code: 1900; 7400; 7418

S/N: C6F1-Up

S/N: C7H1-Up

S/N: C6J1-Up

S/N: C6L1-Up

S/N: G7L1-Up

S/N: C6M1-Up

S/N: C6N1-Up

S/N: C8W1-Up

S/N: C7Y1-Up

S/N: C8Y1-Up

Shutoffs

Shutoffs and alarms are electrically operated or mechanically operated. The operation of all electric shutoffs and alarms utilize components which actuate switches in a sensing unit.

Shutoffs are set at critical levels for the following items: operating temperature, operating pressure, operating level, and operating rpm. The particular shutoff may need to be reset before the engine will start.

NOTICE
Always determine the cause of the engine shutdown. Make necessary repairs before attempting to restart the engine.

Be familiar with the following items:

- Types and locations of shutoff
- Conditions which cause each shutoff to function
- The resetting procedure that is required to restart the engine

Alarms

Alarms consist of a switch and a contactor. The switches are wired to the contactors. The contactors activate alarm circuits in an annunciator panel. Your engine may be equipped with the following switches:

Engine oil pressure – The engine oil pressure switch indicates when oil pressure drops below rated system pressure.

Coolant level – The low coolant level switch indicates when the coolant level is low.

Coolant temperature – The coolant temperature switch indicates high jacket water coolant temperature.

Note: The sensing element of the coolant temperature switch must be submerged in coolant in order to operate.

Engines may be equipped with alarms in order to alert the operator when undesirable operating conditions occur.

NOTICE
When an alarm is activated, corrective measures must be taken before the situation becomes an emergency in order to avoid possible engine damage.

If corrective measures are not taken within a reasonable time, engine damage could result. The alarm will continue until the condition is corrected. The alarm may need to be reset.

A switch may be installed in the alarm while the engine is stopped for repairs. Before the engine is started, ensure that the switch is moved to the ON position and that the warning lights are flashing. The engine will not be protected if the switch is left in the OFF position.

Testing the Shutoff and Alarm System

Most control panels are equipped with a lamp test switch. Turn the switch to the ON position in order to check the indicator lights for proper operation. Replace defective bulbs immediately.

NOTICE
During testing, abnormal operating conditions must be simulated. Perform the tests correctly in order to help prevent possible engine damage.

Refer to the Service Manual for more information on testing procedures or consult your Caterpillar dealer.

i02613889

Fuel Shutoff

SMCS Code: 1259; 1704

S/N: C6F1-Up

S/N: C7H1-Up

S/N: C6J1-Up

S/N: C6L1-Up

S/N: G7L1-Up

S/N: C6M1-Up

S/N: C6N1-Up

S/N: C8W1-Up

S/N: C7Y1-Up

S/N: C8Y1-Up

The fuel shutoff solenoid is located on the fuel injection pump. When the fuel shutoff solenoid is activated, the solenoid moves the fuel rack to the “OFF” position.

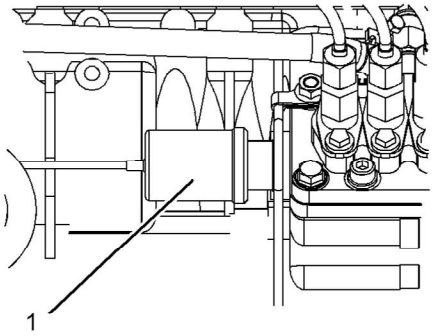

g01305771

Illustration 33

Typical example

(1) Fuel shutoff solenoid

If an electronically controlled governor has been installed the governor operates the fuel rack in order to stop the engine.

Engine Starting

i01486758

Before Starting Engine

SMCS Code: 1000; 1400; 1450

S/N: C6F1-Up

S/N: C7H1-Up

S/N: C6J1-Up

S/N: C6L1-Up

S/N: G7L1-Up

S/N: C6M1-Up

S/N: C6N1-Up

S/N: C8W1-Up

S/N: C7Y1-Up

S/N: C8Y1-Up

Perform the required daily maintenance and other periodic maintenance before the engine is started. Inspect the engine compartment. This inspection can help prevent major repairs at a later date. Refer to the Operation and Maintenance Manual, "Maintenance Interval Schedule" for more information.

- For the maximum service life of the engine, make a thorough inspection before the engine is started. Look for the following items: oil leaks, coolant leaks, loose bolts, and trash buildup. Remove trash buildup and arrange for repairs, as needed.
- Inspect the cooling system hoses for cracks and for loose clamps.
- Inspect the alternator and accessory drive belts for cracks, breaks, and other damage.
- Inspect the wiring for loose connections and for worn wires or frayed wires.
- Check the fuel supply. Drain water from the water separator (if equipped). Open the fuel supply valve.

NOTICE
All valves in the fuel return line must be open before and during engine operation to help prevent high fuel pressure. High fuel pressure may cause filter housing failure or other damage.

If the engine has not been started for several weeks, fuel may have drained from the fuel system. Air may have entered the filter housing. Also, when fuel filters have been changed, some air pockets will be trapped in the engine. In these instances, prime the fuel system. Refer to the Operation and Maintenance Manual, "Fuel System - Prime" for more information on priming the fuel system.

⚠ WARNING

Engine exhaust contains products of combustion which may be harmful to your health. Always start and operate the engine in a well ventilated area and, if in an enclosed area, vent the exhaust to the outside.

- Do not start the engine or move any of the controls if there is a "DO NOT OPERATE" warning tag or similar warning tag attached to the start switch or to the controls.
- Ensure that the areas around the rotating parts are clear.
- All of the guards must be put in place. Check for damaged guards or for missing guards. Repair any damaged guards. Replace damaged guards and/or missing guards.
- Disconnect any battery chargers that are not protected against the high current drain that is created when the electric starting motor (if equipped) is engaged. Check electrical cables and check the battery for poor connections and for corrosion.
- Reset all of the shutoffs or alarm components.
- Check the engine lubrication oil level. Maintain the oil level between the "ADD" mark and the "FULL" mark on the oil level gauge.
- Check the coolant level. Observe the coolant level in the coolant recovery tank (if equipped). Maintain the coolant level to the "FULL" mark on the coolant recovery tank.
- If the engine is not equipped with a coolant recovery tank maintain the coolant level within 13 mm (0.5 inch) of the bottom of the filler pipe. If the engine is equipped with a sight glass, maintain the coolant level in the sight glass.
- Observe the air cleaner service indicator (if equipped). Service the air cleaner when the yellow diaphragm enters the red zone, or when the red piston locks in the visible position.

- Ensure that any driven equipment has been disengaged. Minimize electrical loads or remove any electrical loads.

i02665546

Starting the Engine

SMCS Code: 1000; 1450

S/N: C6F1-Up

S/N: C7H1-Up

S/N: C6J1-Up

S/N: C6L1-Up

S/N: G7L1-Up

S/N: C6M1-Up

S/N: C6N1-Up

S/N: C8W1-Up

S/N: C7Y1-Up

S/N: C8Y1-Up

⚠ WARNING

Do not use aerosol types of starting aids such as ether. Such use could result in an explosion and personal injury.

Refer to the Service Manual for your type of controls. Use the following procedure to start the engine.

1. Move the throttle lever to the low idle position before you start the engine.

Note: If necessary, increase the throttle position so that the engine will start in cold conditions. The engine speed should not exceed 1500 rev/min until the oil pressure has increased.

NOTICE
Do not operate the glow plugs for more than 30 seconds at one time. Damage to the glow plugs could occur.

2. Turn the engine start switch to the HEAT position. Hold the engine start switch in the HEAT position for 6 seconds until the glow plug indicator light illuminates. This will activate the glow plugs and aid in the starting of the engine.

NOTICE
Do not crank the engine for more than 30 seconds. Allow the electric starting motor to cool for two minutes before cranking the engine again.

3. While the glow plug indicator light is illuminated, turn the engine start switch to the START position and crank the engine.

4. When the engine starts, release the engine start switch.

5. Slowly move the throttle lever to the low idle position and allow the engine to idle. Refer to the Operation and Maintenance Manual, “After Starting Engine” topic.

Note: If the glow plug indicator light illuminates rapidly for 2 to 3 seconds, or if the glow plug indicator light fails to illuminate, a malfunction exists in the cold start system. Do not use ether or other starting fluids to start the engine.

6. If the engine does not start, release the engine start switch and allow the electric starting motor to cool. Then, repeat steps 2 through step 5.

7. Turn the engine start switch to the OFF position in order to stop the engine.

i01762033

Cold Weather Starting

SMCS Code: 1000; 1250; 1450; 1453; 1456; 1900

S/N: C6F1-Up

S/N: C7H1-Up

S/N: C6J1-Up

S/N: C6L1-Up

S/N: G7L1-Up

S/N: C6M1-Up

S/N: C6N1-Up

S/N: C8W1-Up

S/N: C7Y1-Up

S/N: C8Y1-Up

⚠ WARNING

Do not use aerosol types of starting aids such as ether. Such use could result in an explosion and personal injury.

Startability will be improved at temperatures below −18 °C (0 °F) from the use of a jacket water heater or extra battery capacity.

When No. 2 diesel fuel is used, the following items provide a means of minimizing starting problems and fuel problems in cold weather: engine oil pan heaters, jacket water heaters, fuel heaters, and fuel line insulation.

Use the procedure that follows for cold weather starting.

1. The governor control needs to be in the LOW IDLE position if the temperature is below 0 °C (32 °F).
2. Activate the glow plugs for 6 seconds.

NOTICE
Do not crank the engine for more than 30 seconds. Allow the electric starting motor to cool for two minutes before cranking the engine again.

3. Turn the engine start switch to the START position.
4. When the engine starts, release the engine start switch key.
5. If the engine does not start, release the engine start switch and allow the starter motor to cool. Then, repeat steps 2 through step 4.
6. Allow the engine to idle for three to five minutes, or allow the engine to idle until the water temperature indicator begins to rise. The engine should run at low idle smoothly until speed is gradually increased to high idle. Allow the white smoke to disperse before proceeding with normal operation.
7. Operate the engine at low load until all systems reach operating temperature. Check the gauges during the warm-up period.

i02242604

Starting with Jump Start Cables

SMCS Code: 1000; 1401; 1402; 1900

S/N: C6F1-Up

S/N: C7H1-Up

S/N: C6J1-Up

S/N: C6L1-Up

S/N: G7L1-Up

S/N: C6M1-Up

S/N: C6N1-Up

S/N: C8W1-Up

S/N: C7Y1-Up

S/N: C8Y1-Up

⚠ WARNING

Improper jump start cable connections can cause an explosion resulting in personal injury.

Prevent sparks near the batteries. Sparks could cause vapors to explode. Do not allow jump start cable ends to contact each other or the engine.

If the installation is not equipped with a backup battery system, it may be necessary to start the engine from an external electrical source.

First, determine the reason that it is necessary to start with power from an external source.

Many batteries which are considered unusable are still rechargeable. After jump starting, the alternator may not be able to fully recharge batteries that are severely discharged. The batteries must be charged to the proper voltage with a battery charger. For information on testing and charging, refer to the Special Instruction, SEHS7633, “Battery Test Procedure”.

NOTICE
Using a battery source with the same voltage as the electric starting motor. Use ONLY equal voltage for jump starting. The use of higher voltage will damage the electrical system.

Do not reverse the battery cables. The alternator can be damaged. Attach ground cable last and remove first.

When using an external electrical source to start the engine, turn the generator set control switch to the "OFF" position. Turn all electrical accessories OFF before attaching the jump start cables.

Ensure that the main power switch is in the OFF position before attaching the jump start cables to the engine being started.

1. Turn the start switch on the stalled engine to the OFF position. Turn off all accessories.
2. Connect one positive end of the jump start cable to the positive cable terminal of the discharged battery. Connect the other positive end of the jump start cable to the positive cable terminal of the electrical source.
3. Connect one negative end of the jump start cable to the negative cable terminal of the electrical source. Connect the other negative end of the jump start cable to the engine block or to the chassis ground. This procedure helps to prevent potential sparks from igniting combustible gases that are produced by some batteries.
4. Charge the batteries. The engine will not continue to run after starting if the batteries have not been charged.
5. Start the engine.
6. Immediately after the stalled engine is started, disconnect the jump start cables in reverse order.

i01646248

After Starting Engine

SMCS Code: 1000

S/N: C6F1-Up

S/N: C7H1-Up

S/N: C6J1-Up

S/N: C6L1-Up

S/N: G7L1-Up

S/N: C6M1-Up

S/N: C6N1-Up

S/N: C8W1-Up

S/N: C7Y1-Up

S/N: C8Y1-Up

Note: In temperatures from 0 to 60°C (32 to 140°F), the warm-up time is approximately three minutes. In temperatures below 0°C (32°F), additional warm-up time may be required.

Note: Ensure that the self test for the monitoring system (if equipped) is completed before operating the engine under load.

When the engine idles during warm-up, observe the following conditions:

- Check for any fluid or for any air leaks at idle rpm and at one-half full rpm (no load on the engine) before operating the engine under load. This is not possible in some applications.
- Operate the engine at low idle until all systems achieve operating temperatures. Check all gauges during the warm-up period.

Note: Gauge readings should be observed and the data should be recorded frequently while the engine is operating. Comparing the data over time will help to determine normal readings for each gauge. Comparing data over time will also help detect abnormal operating developments. Significant changes in the readings should be investigated.

Engine Operation

i00718869

Engine Operation

SMCS Code: 1000

S/N: C6F1-Up

S/N: C7H1-Up

S/N: C6J1-Up

S/N: C6L1-Up

S/N: G7L1-Up

S/N: C6M1-Up

S/N: C6N1-Up

S/N: C8W1-Up

S/N: C7Y1-Up

S/N: C8Y1-Up

Proper operation and maintenance are key factors in obtaining the maximum life and economy of the engine. If the directions in the Operation and Maintenance Manual are followed, costs can be minimized and engine service life can be maximized.

The time that is needed for the engine to reach normal operating temperature can be less than the time needed for a walk-around inspection of the engine.

After the engine is started and after the engine reaches normal operating temperature, the engine can be operated at the rated rpm. The engine will reach normal operating temperature faster when the engine is at rated speed. The engine will reach normal operating temperature faster when the engine is at low power demand. This procedure is more effective than idling the engine at no load. The engine should reach operating temperature in a few minutes.

Gauge readings should be observed and the data should be recorded frequently while the engine is operating. Comparing the data over time will help to determine normal readings for each gauge. Comparing data over time will also help detect abnormal operating developments. Significant changes in the readings should be investigated.

i00613522

Engine Warm-up

SMCS Code: 1000

S/N: C6F1-Up

S/N: C7H1-Up

S/N: C6J1-Up

S/N: C6L1-Up

S/N: G7L1-Up

S/N: C6M1-Up

S/N: C6N1-Up

S/N: C8W1-Up

S/N: C7Y1-Up

S/N: C8Y1-Up

1. Run the engine at low idle for three to five minutes, or run the engine at low idle until the jacket water temperature starts to rise.

   More time may be necessary when the temperature is below −18°C (0°F).

2. Check all of the gauges during the warm-up period.

3. Perform another walk-around inspection. Check the engine for fluid leaks and air leaks.

4. Increase the rpm to the rated rpm. Check for fluid leaks and air leaks. The engine may be operated at full rated rpm and at full load when the jacket water temperature reaches 60°C (140°F).

i01646335

Engaging the Driven Equipment

SMCS Code: 1000

S/N: C6F1-Up

S/N: C7H1-Up

S/N: C6J1-Up

S/N: C6L1-Up

S/N: G7L1-Up

S/N: C6M1-Up

S/N: C6N1-Up

S/N: C8W1-Up

S/N: C7Y1-Up

S/N: C8Y1-Up

1. Operate the engine at one-half of the rated rpm, when possible.

2. Engage the driven equipment without a load on the equipment, when possible.

   Interrupted starts put excessive stress on the drive train. Interrupted starts also waste fuel. To get the driven equipment in motion, engage the clutch smoothly with no load on the equipment. This method should produce a start that is smooth and easy. The engine rpm should not increase and the clutch should not slip.

3. Ensure that the ranges of the gauges are normal when the engine is operating at one-half of the rated rpm. Ensure that all gauges operate properly.

4. Increase the engine rpm to the rated rpm. Always increase the engine rpm to the rated rpm before the load is applied.

5. Apply the load. Begin operating the engine at low load. Check the gauges and equipment for proper operation. After normal oil pressure is reached and the temperature gauge begins to move, the engine may be operated at full load. Check the gauges and equipment frequently when the engine is operated under load.

   Extended operation at low idle or at reduced load may cause increased oil consumption and carbon buildup in the cylinders. This carbon buildup results in a loss of power and/or poor performance.

i01432412

Fuel Conservation Practices

SMCS Code: 1000; 1250

S/N: C6F1-Up

S/N: C7H1-Up

S/N: C6J1-Up

S/N: C6L1-Up

S/N: G7L1-Up

S/N: C6M1-Up

S/N: C6N1-Up

S/N: C8W1-Up

S/N: C7Y1-Up

S/N: C8Y1-Up

The efficiency of the engine can affect the fuel economy. Caterpillar's design and technology in manufacturing provides maximum fuel efficiency in all applications. Follow the recommended procedures in order to attain optimum performance for the life of the engine.

- Avoid spilling fuel.

Fuel expands when the fuel is warmed up. The fuel may overflow from the fuel tank. Inspect fuel lines for leaks. Repair the fuel lines, as needed.

- Be aware of the properties of the different fuels. Use only the recommended fuels.

- Avoid unnecessary idling.

Shut off the engine rather than idle for long periods of time.

- Observe the service indicator frequently. Keep the air cleaner elements clean.

- Maintain a good electrical system.

One bad battery cell will overwork the alternator. This will consume excess power and excess fuel.

- Ensure that the belts are properly adjusted. The belts should be in good condition.

- Ensure that all of the connections of the hoses are tight. The connections should not leak.

- Ensure that the driven equipment is in good working order.

- Cold engines consume excess fuel. Utilize heat from the jacket water system and the exhaust system, when possible. Keep cooling system components clean and keep cooling system components in good repair. Never operate the engine without water temperature regulators. All of these items will help maintain operating temperatures.

- Settings for the fuel system and the limits for the operating altitude are stamped on the Engine Information Plate. If an engine is moved to a higher altitude, the settings must be changed by a Caterpillar dealer. Changing the settings will help to provide the maximum efficiency for the engine. Engines can be operated safely at higher altitudes, but the engines will deliver less horsepower. The fuel settings should be changed by a Caterpillar dealer in order to obtain the rated horsepower.

Engine Stopping

i01433818

Stopping the Engine

SMCS Code: 1000; 7000

S/N: C6F1-Up

S/N: C7H1-Up

S/N: C6J1-Up

S/N: C6L1-Up

S/N: G7L1-Up

S/N: C6M1-Up

S/N: C6N1-Up

S/N: C8W1-Up

S/N: C7Y1-Up

S/N: C8Y1-Up

Note: Individual applications will have different control systems. Ensure that the shutoff procedures are understood. Use the following general guidelines in order to stop the engine.

1. Reduce the engine rpm to low idle.
2. Remove the load from the engine.
3. If the engine has been operated at low loads, run the engine at low idle for 30 seconds before you stop the engine.
4. If the engine has been operated at high load, increase engine rpm to no more than 1/2 rated rpm for three to five minutes.

   This reduces coolant temperatures and oil temperatures. A reduction in these temperatures stabilizes internal engine coolant and oil temperatures.
5. Reduce the engine rpm to low idle before stopping the engine.
6. After the cool down period, turn the start switch to the OFF position.

i01171573

Emergency Stopping

SMCS Code: 1000; 7418

S/N: C6F1-Up

S/N: C7H1-Up

S/N: C6J1-Up

S/N: C6L1-Up

S/N: G7L1-Up

S/N: C6M1-Up

S/N: C6N1-Up

S/N: C8W1-Up

S/N: C7Y1-Up

S/N: C8Y1-Up

NOTICE
Emergency shutoff controls are for EMERGENCY use ONLY. DO NOT use emergency shutoff devices or controls for normal stopping procedure.

Ensure that any components for the external system that support the engine operation are secured after the engine is stopped.

Emergency Stop Button

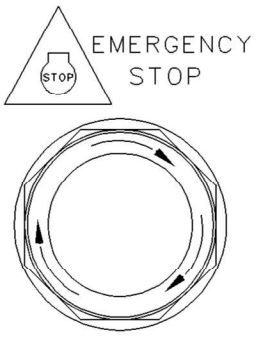

Illustration 34 g00104303

Typical emergency stop button

The emergency stop button is in the OUT position for normal engine operation. Push the emergency stop button. The engine will not start when the button is locked. Turn the button clockwise in order to reset.

NOTICE
Stopping the engine immediately after it has been working under load can result in overheating and accelerated wear of the engine components.

If the engine has been operating at high rpm and/or high loads, run the engine at low idle for at least three minutes to reduce and stabilize the internal engine temperature before stopping the engine.

i02242518

After Stopping Engine

SMCS Code: 1000

S/N: C6F1-Up

S/N: C7H1-Up

S/N: C6J1-Up

S/N: C6L1-Up

S/N: G7L1-Up

S/N: C6M1-Up

S/N: C6N1-Up

S/N: C8W1-Up

S/N: C7Y1-Up

S/N: C8Y1-Up

Note: Before you check the engine oil, do not operate the engine for at least 10 minutes in order to allow the engine oil to return to the oil pan.

- Check the crankcase oil level. Maintain the oil level between the “ADD” mark and the “FULL” mark on the oil level gauge.
- If necessary, perform minor adjustments. Repair any leaks and tighten any loose bolts.
- Note the service hour meter reading. Perform the maintenance that is in the Operation and Maintenance Manual, “Maintenance Interval Schedule”.
- Fill the fuel tank in order to help prevent accumulation of moisture in the fuel. Do not overfill the fuel tank.

NOTICE
Only use antifreeze/coolant mixtures that are recommended in this Operation and Maintenance Manual, “Refill Capacities and Recommendations”.

- Allow the engine to cool. Check the coolant level. Maintain the cooling system at 13 mm (0.5 inch) from the bottom of the pipe for filling.
- If freezing temperatures are expected, check the coolant for proper antifreeze protection. The cooling system must be protected against freezing to the lowest expected outside temperature. Add the proper coolant/water mixture, if necessary.
- Perform all required periodic maintenance on all driven equipment. This maintenance is outlined in the instructions from the OEM.

Cold Weather Operation

i01457051

Radiator Restrictions

SMCS Code: 1353; 1396

S/N: C6F1-Up

S/N: C7H1-Up

S/N: C6J1-Up

S/N: C6L1-Up

S/N: G7L1-Up

S/N: C6M1-Up

S/N: C6N1-Up

S/N: C8W1-Up

S/N: C7Y1-Up

S/N: C8Y1-Up

Caterpillar discourages the use of airflow restriction devices that are mounted in front of radiators. Airflow restriction can cause the following conditions:

- High exhaust temperatures
- Power loss
- Excessive fan usage
- Reduction in fuel economy

If an airflow restriction device must be used, the device should have a permanent opening directly in line with the fan hub. The device must have a minimum opening dimension of at least 770 cm^2 (120 in^2).

A centered opening that is directly in line with the fan hub is specified in order to prevent an interrupted airflow on the fan blades. Interrupted airflow on the fan blades could cause a fan failure.

Caterpillar recommends a warning device for the inlet manifold temperature and/or the installation of an inlet air temperature gauge. The warning device for the inlet manifold temperature should be set at 75 °C (167 °F). The inlet manifold air temperature should not exceed 75 °C (167 °F). Temperatures that exceed this limit can cause power loss and potential engine damage.

i02237624

Fuel and the Effect from Cold Weather

SMCS Code: 1000; 1250

S/N: C6F1-Up

S/N: C7H1-Up

S/N: C6J1-Up

S/N: C6L1-Up

S/N: G7L1-Up

S/N: C6M1-Up

S/N: C6N1-Up

S/N: C8W1-Up

S/N: C7Y1-Up

S/N: C8Y1-Up

The following fuels are the grades that are available for Caterpillar engines:

- No. 1
- No. 2
- Blend of No. 1 and No. 2

No. 2 diesel fuel is the most commonly used fuel. Either No. 1 diesel fuel or a blend of No. 1 and No. 2 is best suited for cold weather operation.

Quantities of No. 1 diesel fuel are limited. No. 1 diesel fuels are usually available during the months of the winter in the colder climates. During cold weather operation, if No. 1 diesel fuel is not available, use No. 2 diesel fuel, if necessary.

There are three major differences between No. 1 and No. 2 diesel fuel. No. 1 diesel fuel has the following properties:

- Lower cloud point
- Lower pour point
- Lower rating of kJ (BTU) per unit volume of fuel

When No. 1 diesel fuel is used, a decrease in power and in fuel efficiency may be noticed. Other operating effects should not be experienced.

The cloud point is the temperature when a cloud of wax crystals begins to form in the fuel. These crystals can cause the fuel filters to plug. The pour point is the temperature when diesel fuel will thicken. The diesel fuel becomes more resistant to flow through fuel pumps and through fuel lines.

Be aware of these values when diesel fuel is purchased. Anticipate the average ambient temperature of the area. Engines that are fueled in one climate may not operate well if the engines are moved to another climate. Problems can result due to changes in temperature.

Before troubleshooting for low power or for poor performance in the winter, check the type of fuel that is being used.

When No. 2 diesel fuel is used the following components provide a means of minimizing problems in cold weather:

- Starting aids
- Engine oil pan heaters
- Engine coolant heaters
- Fuel heaters
- Fuel line insulation

For more information on cold weather operation, see Special Publication, SEBU5898, “Cold Weather Recommendations”.

i01250450

Fuel Related Components in Cold Weather

SMCS Code: 1000; 1250

S/N: C6F1-Up

S/N: C7H1-Up

S/N: C6J1-Up

S/N: C6L1-Up

S/N: G7L1-Up

S/N: C6M1-Up

S/N: C6N1-Up

S/N: C8W1-Up

S/N: C7Y1-Up

S/N: C8Y1-Up

Fuel Tanks

Condensation can form in partially filled fuel tanks. Top off the fuel tanks after you operate the engine.

Fuel tanks should contain some provision for draining water and sediment from the bottom of the tanks. Some fuel tanks use supply pipes that allow water and sediment to settle below the end of the fuel supply pipe.

Some fuel tanks use supply lines that take fuel directly from the bottom of the tank. If the engine is equipped with this system, regular maintenance of the fuel system filter is important.

Drain the water and sediment from any fuel storage tank at the following intervals: weekly, oil changes, and refueling of the fuel tank. This will help prevent water and/or sediment from being pumped from the fuel storage tank and into the engine fuel tank.

Fuel Filters

It is possible that a primary fuel filter is installed between the fuel tank and the engine fuel inlet. After you change the fuel filter, always prime the fuel system in order to remove air bubbles from the fuel system. Refer to the Operation and Maintenance Manual in the Maintenance Section for more information on priming the fuel system.

The micron rating and the location of a primary fuel filter is important in cold weather operation. The primary fuel filter and the fuel supply line are the most common components that are affected by cold fuel.

NOTICE
In order to maximize fuel system life and prevent premature wear out from abrasive particles in the fuel, a two micron absolute high efficiency fuel filter is required for all Caterpillar Electronic Unit Injectors. Caterpillar High Efficiency Fuel Filters meet these requirements. Consult your Caterpillar dealer for the proper part numbers.

Fuel Heaters

Fuel heaters help to prevent fuel filters from plugging in cold weather due to waxing. A fuel heater should be installed in the fuel system before the primary fuel filter.

The following fuel heaters are recommended for Caterpillar engines:

- 7C-3557 Fuel Heater Group
- 7C-3558 Heater Kit

For further information on fuel heaters, consult your Caterpillar dealer.

Disconnect the fuel heater in warm weather.

Note: Fuel heaters that are controlled by the water temperature regulator or self-regulating fuel heaters should be used with this engine. Fuel heaters that are not controlled by the water temperature regulator can heat the fuel in excess of 65°C (149°F). A loss of engine power can occur if the fuel supply temperature exceeds 37°C (100°F).

Note: Heat exchanger type fuel heaters should have a bypass provision in order to prevent overheating of the fuel in warm weather operation.

Maintenance Section

Refill Capacities

i03021239

Refill Capacities and Recommendations

SMCS Code: 1348; 1395; 7560

S/N: C6F1-Up

S/N: C7H1-Up

S/N: C6J1-Up

S/N: C6L1-Up

S/N: G7L1-Up

S/N: C6M1-Up

S/N: C6N1-Up

S/N: C8W1-Up

S/N: C7Y1-Up

S/N: C8Y1-Up

Engine Oil

NOTICE
These recommendations are subject to change without notice. Contact your local Caterpillar dealer for the most up to date recommendations.

API Oils

The Engine Oil Licensing and Certification System by the American Petroleum Institute (API) is recognized by Caterpillar. For detailed information about this system, see the latest edition of the “API publication No. 1509”. Engine oils that bear the API symbol are authorized by API.

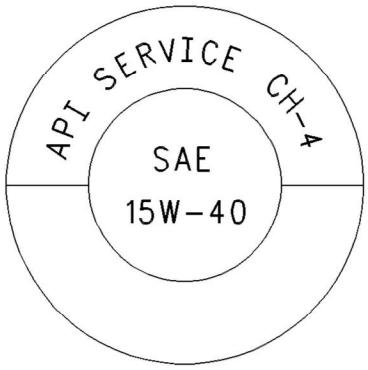

Illustration 35 g00546535
Typical API symbol

Diesel engine oils CC, CD, CD-2, and CE have not been API authorized classifications since 1 January 1996. Table 10 summarizes the status of the classifications.

Table 10

API Classifications	
Current	**Obsolete**
CI-4(1). CH-4(1). CG-4(2). CF-4(3)	CE
CF(4)	CC, CD
CF-2(5)	CD-2(5)

(1) **API CH-4 and CI-4 oils are acceptable if the requirements of Caterpillar's ECF-1 (Engine Crankcase Fluid specification-1) are met. CH-4 and CI-4 oils that have not met the requirements of Caterpillar's ECF-1 Specification may cause reduced engine life.**

(2) API CG-4 oils are acceptable for all Caterpillar diesel engines. When the API CG-4 oils are used, the oil drain interval should not exceed the standard oil drain interval for your engine.

(3) API CF-4 oils are not recommended for this series of Caterpillar diesel engines. For all other commercial diesel engines, the oil drain interval should not exceed 50 percent of the standard oil drain interval for your engine with a maximum of 125 hours.

(4) API CF oils are not recommended for this series of Caterpillar engines and smaller Direct Injection (DI) diesel engines.

(5) API CF-2 and CD-2 oils are classifications for two-cycle diesel engines. Caterpillar does not sell engines that utilize the CD-2 and the API CF-2 oils.

Note: When oil meets more than one API classification, the applicable footnote is determined by the highest API classification that is met.

Example – An oil meets both the API CH-4 and the API CF oil classifications. In this case, the API CH-4 applies.

Cat DEO (Diesel Engine Oil)

Caterpillar Oils have been developed and tested in order to provide the full performance and service life that has been designed and built into Caterpillar Engines. Caterpillar Oils are currently used to fill diesel engines at the factory. These oils are offered by Caterpillar dealers for continued use when the engine oil is changed. Consult your Caterpillar dealer for more information on these oils.

Due to significant variations in the quality and in the performance of commercially available oils, Caterpillar makes the following recommendations:

- **Cat DEO (Diesel Engine Oil) (10W-30)**
- **Cat DEO (Diesel Engine Oil) (15W-40)**

Caterpillar multigrade DEO is formulated with the correct amounts of detergents, dispersants, and alkalinity in order to provide superior performance in Caterpillar Diesel Engines.

Caterpillar multigrade DEO is available in various viscosity grades that include SAE 10W-30 and SAE 15W-40. To choose the correct viscosity grade for the ambient temperature, see Table 11. Multigrade oils provide the correct viscosity for a broad range of operating temperatures.

Multigrade oils are effective in maintaining low oil consumption and low levels of piston deposits.

Caterpillar multigrade DEO can be used in other diesel engines and in gasoline engines. See the engine manufacturer's guide for the recommended specifications. Compare the specifications to the specifications of Caterpillar multigrade DEO. The current industry standards for Caterpillar DEO are listed on the product label and on the data sheets for the product.

Consult your Caterpillar dealer for part numbers and for available sizes of containers.

Note: Caterpillar SAE 15W-40 multigrade DEO exceeds the performance requirements for the following API classifications: CI-4, CH-4, CG-4, CF-4, and CF. The Caterpillar multigrade DEO exceeds the requirements of the Caterpillar specification that is ECF-1 (Engine Crankcase Fluid-1). The Caterpillar SAE 15W-40 multigrade DEO passes the following proprietary tests: sticking of the piston ring, oil control tests, wear tests, and soot tests. Proprietary tests help ensure that Caterpillar multigrade oil provides superior performance in Caterpillar Diesel Engines. In addition, Caterpillar multigrade oil exceeds many of the performance requirements of other manufacturers of diesel engines. Therefore, this oil is an excellent choice for many mixed fleets. **True high performance oil is produced with a combination of the following factors: industry standard tests, proprietary tests, field tests, and prior experience with similar formulations. The design and the development of Caterpillar lubricants that are both high performance and high quality are based on these factors.**

Note: Non-Caterpillar commercial oils are second choice oils.

Commercial Oils

Note: If Caterpillar Multigrade DEO is not used, use only commercial oils that meet the following classifications.

- API CH-4 multigrade oils and API CI-4 multigrade oils are acceptable if the requirements of Caterpillar's ECF-1 (Engine Crankcase Fluid specification-1) are met. CH-4 oils and CI-4 oils that have not met the requirements of Caterpillar's ECF-1 Specification may cause reduced engine life.
- API CG-4 multigrade oils are acceptable for all Caterpillar diesel engines. When the API CG-4 oils are used, the oil drain interval should not exceed the standard oil drain interval for your engine.
- API CF-4 multigrade oils are not recommended for this series of diesel engines. For all other smaller commercial diesel engines, the oil drain interval should not exceed 50 percent of the standard oil drain interval for your engine.

NOTICE

In selecting oil for any engine application, both the oil viscosity and oil performance classification/specification as specified by the engine manufacturer must be defined and satisfied. Using only one of these parameters will not sufficiently define oil for an engine application.

In order to make the proper choice of a commercial oil, refer to the following explanations:

API CI-4 – API CI-4 oils were developed in order to meet the requirements of high performance diesel engines that use cooled Exhaust Gas Recirculation (EGR). API CI-4 oils are acceptable if the requirements of Caterpillar's ECF-1 (Engine Crankcase Fluid specification-1) are met.

API CH-4 – API CH-4 oils were developed in order to protect low emissions diesel engines that use a 0.05 percent level of fuel sulfur. However, API CH-4 oils may be used with higher sulfur fuels. API CH-4 oils are acceptable if the requirements of Caterpillar's ECF-1 (Engine Crankcase Fluid specification-1) are met.

Note: CH-4 oils and CI-4 oils that have not met the requirements of Caterpillar's ECF-1 Specification may cause reduced engine life.

NOTICE
Failure to follow these oil recommendations can cause shortened engine service life due to deposits and/or excessive wear.

Note: Refer to Special Publication, SEBU6251, “Caterpillar Commercial Diesel Engine Fluids Recommendations” for additional information that relates to lubrication for your engine.

Lubricant Viscosity Recommendations

The proper SAE viscosity grade of oil is determined by the minimum ambient temperature during cold engine start-up, and the maximum ambient temperature during engine operation.

Refer to Table 11 (minimum temperature) in order to determine the required oil viscosity for starting a cold engine.

Refer to Table 11 (maximum temperature) in order to select the oil viscosity for engine operation at the highest ambient temperature that is anticipated.

Note: Generally, use the highest oil viscosity that is available to meet the requirement for the temperature at start-up.

If ambient temperature conditions at engine start-up require the use of multigrade SAE 0W oil, SAE 0W-40 viscosity grade is preferred over SAE 0W-20 or SAE 0W-30.

Table 11

Engine Oil Viscosities for Ambient Temperatures		
	Ambient Temperature	
Viscosity Grade	Minimum	Maximum
SAE 0W-20	−40 °C (−40 °F)	10 °C (50 °F)
SAE 0W-30	−40 °C (−40 °F)	30 °C (86 °F)
SAE 0W-40	−40 °C (−40 °F)	40 °C (104 °F)
SAE 5W-30	−30 °C (−22 °F)	30 °C (86 °F)
SAE 5W-40	−30 °C (−22 °F)	50 °C (122 °F)
SAE 10W-30	−18 °C (0 °F)	40 °C (104 °F)
SAE 10W-40	−18 °C (0 °F)	50 °C (122 °F)
SAE 15W-40	−9.5 °C (15 °F)	50 °C (122 °F)

Note: Supplemental heat is recommended below the minimum recommended ambient temperature.

S·O·S Oil Analysis

Caterpillar has developed a tool for maintenance management that evaluates oil degradation and the tool also detects the early signs of wear on internal components. The Caterpillar tool for oil analysis is called S·O·S Oil Analysis and the tool is part of the S·O·S Services program. S·O·S Oil Analysis divides oil analysis into three categories:

- Wear Analysis
- Oil condition
- Additional tests

The wear analysis monitors metal particles, some oil additives, and some contaminants.

Oil condition uses infrared (IR) analysis to evaluate the chemistry of the oil. Infrared analysis is also used to detect certain types of contamination.

Additional tests are used to measure contamination levels from water, fuel, or coolant. Oil viscosity and corrosion protection can be evaluated, as needed.

Refer to Special Publication, SEBU6251, “Caterpillar Commercial Diesel Engine Fluids Recommendations” or contact your local Caterpillar dealer for additional information concerning the S·O·S Oil Analysis program.

Refill Capacities for the Lubrication System

The refill capacities for the engine crankcase reflect the approximate capacity of the crankcase or sump plus standard oil filters. Auxiliary oil filter systems will require additional oil. Refer to the OEM specifications for the capacity of the auxiliary oil filter.

Table 12

C0.5 Engine Approximate Refill Capacities		
Compartment or System	**Liters**	**Quarts**
Crankcase Oil Sump (Standard)(1)	2.01	2.1
External System (OEM)(2)		
Total Lubrication System(3)		

(1) These values are the approximate capacities for the crankcase oil sump which include the standard oil filters that are installed at the factory.

(2) Enter the capacity for the External System in this row. Refer to either Caterpillar specifications or OEM specifications for further information. Engines with auxiliary oil filters will require additional oil. Refer to the OEM specifications for the capacity of the auxiliary oil filter.

(3) The Total Lubrication System includes the capacity for the Crankcase Oil Sump plus the capacity for the External System. Enter the total in this row.

Table 13

C0.7 Engine Approximate Refill Capacities		
Compartment or System	**Liters**	**Quarts**
Crankcase Oil Sump (Standard)(1)	3.05	3.2
External System (OEM)(2)		
Total Lubrication System(3)		

(1) These values are the approximate capacities for the crankcase oil sump which include the standard oil filters that are installed at the factory.

(2) Enter the capacity for the External System in this row. Refer to either Caterpillar specifications or OEM specifications for further information. Engines with auxiliary oil filters will require additional oil. Refer to the OEM specifications for the capacity of the auxiliary oil filter.

(3) The Total Lubrication System includes the capacity for the Crankcase Oil Sump plus the capacity for the External System. Enter the total in this row.

Table 14

C1.1 Engine Approximate Refill Capacities		
Compartment or System	**Liters**	**Quarts**
Crankcase Oil Sump (Standard)(1)	4.4	4.64
External System (OEM)(2)		
Total Lubrication System(3)		

(1) These values are the approximate capacities for the crankcase oil sump which include the standard oil filters that are installed at the factory.

(2) Enter the capacity for the External System in this row. Refer to either Caterpillar specifications or OEM specifications for further information. Engines with auxiliary oil filters will require additional oil. Refer to the OEM specifications for the capacity of the auxiliary oil filter.

(3) The Total Lubrication System includes the capacity for the Crankcase Oil Sump plus the capacity for the External System. Enter the total in this row.

Table 15

C1.5 Turbocharged Engines and Naturally Aspirated Engines Approximate Refill Capacities		
Compartment or System	**Liters**	**Quarts**
Crankcase Oil Sump (Standard)(1)	5.6	5.91
External System (OEM)(2)		
Total Lubrication System(3)		

(1) These values are the approximate capacities for the crankcase oil sump which include the standard oil filters that are installed at the factory.

(2) Enter the capacity for the External System in this row. Refer to either Caterpillar specifications or OEM specifications for further information. Engines with auxiliary oil filters will require additional oil. Refer to the OEM specifications for the capacity of the auxiliary oil filter.

(3) The Total Lubrication System includes the capacity for the Crankcase Oil Sump plus the capacity for the External System. Enter the total in this row.

Table 16

C1.6 Engine Approximate Refill Capacities		
Compartment or System	**Liters**	**Quarts**
Crankcase Oil Sump (Standard)(1)	5.6	5.91
External System (OEM)(2)		
Total Lubrication System(3)		

(1) These values are the approximate capacities for the crankcase oil sump which include the standard oil filters that are installed at the factory.

(2) Enter the capacity for the External System in this row. Refer to either Caterpillar specifications or OEM specifications for further information. Engines with auxiliary oil filters will require additional oil. Refer to the OEM specifications for the capacity of the auxiliary oil filter.

(3) The Total Lubrication System includes the capacity for the Crankcase Oil Sump plus the capacity for the External System. Enter the total in this row.

Table 17

C2.2 Turbocharged Engines and Naturally Aspirated Engines Approximate Refill Capacities		
Compartment or System	**Liters**	**Quarts**
Crankcase Oil Sump (Standard)(1)	10.6	11.2
External System (OEM)(2)		
Total Lubrication System(3)		

(1) These values are the approximate capacities for the crankcase oil sump which include the standard oil filters that are installed at the factory.

(2) Enter the capacity for the External System in this row. Refer to either Caterpillar specifications or OEM specifications for further information. Engines with auxiliary oil filters will require additional oil. Refer to the OEM specifications for the capacity of the auxiliary oil filter.

(3) The Total Lubrication System includes the capacity for the Crankcase Oil Sump plus the capacity for the External System. Enter the total in this row.

Lubricating Grease

Caterpillar provides a range of moderate greases to extremely high performance greases in order to service the entire line of Caterpillar products that operate throughout the wide variety of climates. From this variety of Caterpillar grease products, you will find at least one of the Caterpillar greases that will satisfy the performance requirements for any machine or equipment application.

Before selecting a grease for any application, the performance requirements must be determined. Consult the grease recommendations that are made by the OEM for the equipment when the equipment is operated in the expected conditions. Then, consult with your Caterpillar dealer for a list of greases and the following related characteristics.

- Performance specifications
- Available sizes of containers
- Part numbers

Always choose a grease that satisfies the recommendations that are specified by the equipment manufacturer for the application.

Note: If it is necessary to choose a single grease to use for all of the equipment at one site, always choose a grease that satisfies the requirements of the most demanding application.

Do not use the cost per pound as the only factor when you choose a grease. Use the grease that yields the lowest total cost of operation. The cost analysis should include the following factors:

- Parts
- Labor
- Downtime
- Cost of the grease

Greases that barely meet the minimum performance requirements can be expected to barely produce the minimum life of the parts.

Note: Take care when you change the type of grease. Take care when you change to a different supplier of grease. Some greases are not chemically compatible. Some brands of grease can not be interchanged. **If you are in doubt about the compatibility of the old grease and the new grease, purge all of the old grease from the joint.** Consult your supplier in order to determine if the greases are compatible.

Note: All Caterpillar brand of greases are compatible with each other.

Note: Refer to Special Publication, SEBU6251, “Caterpillar Commercial Diesel Engine Fluids Recommendations” for additional information that relates to lubrication for your engine.

General Fuel Information

Diesel fuels that meet the Caterpillar Specification for Distillate Diesel Fuel are recommended. These fuels will help to provide maximum engine service life and performance. In North America, diesel fuel that is identified as No. 1-D or No. 2-D in “ASTM D975” generally meet the specifications. Diesel fuels from other sources could exhibit detrimental properties that are not defined or controlled by this specification.

NOTICE

Operating with fuels that do not meet Caterpillar's recommendations can cause the following effects: starting difficulty, poor combustion, deposits in the fuel injectors, reduced service life of the fuel system, deposits in the combustion chamber, and reduced service life of the engine.

Table 18

Territory	Fuel Requirements from 2007		
EPA	Low Sulfur (500 ppm) maximum		
EC	Sulfur/ Power	Low sulfur (300 ppm) maximum for less than or equal to 19 kW	Sulphur (1000 ppm) maximum for greater than 19 kW
	Models	C0.5 and C0.7	C1.1, C1.5NA, C1.5T, C1.6, C2.2NA, C2.2T and C2.2TA(1)
Non-Regulated Territories	Sulfur limit of less than 4000 ppm		

(1) NA is Naturally Aspirated. T is Turbocharged. TA is Turbocharged Aftercooled.

Table 19

Territory	Fuel Requirements from 2010		
EPA	Ultra Low Sulfur (15 ppm) maximum		
EC	Sulfur/ Power	Ultra Low sulphur (10 ppm) maximum for less than or equal to 37 kW	Low sulphur (300 ppm) maximum for greater than 37 kW
	Models	C0.5, C0.7, C1.1, C1.5NA, C1.5T, C1.6	C2.2NA, C2.2T and C2.2TA(1)
Non Regulated Territories	Sulfur limit of less than 4000 ppm		

(1) NA is Naturally Aspirated. T is Turbocharged. TA is Turbocharged Aftercooled.

Note: Refer to Special Publication, SEBU6251, “Caterpillar Commercial Diesel Engine Fluids Recommendations” for the Caterpillar Specification for distillate fuel and for additional information that relates to fuel for your engine.

Refill Capacities for the Fuel System

Refer to the Operation and Maintenance Manual that is provided by the OEM for capacities of the fuel system.

General Coolant Information

NOTICE
These recommendations are subject to change without notice. Contact your local Caterpillar dealer for the most up to date fluids recommendations.

NOTICE
Never add coolant to an overheated engine. Engine damage could result. Allow the engine to cool first.

NOTICE
If the engine is to be stored in, or shipped to an area with below freezing temperatures, the cooling system must be either protected to the lowest outside temperature or drained completely to prevent damage.

NOTICE
Frequently check the specific gravity of the coolant for proper freeze protection or for anti-boil protection.

Clean the cooling system for the following reasons:

- Contamination of the cooling system
- Overheating of the engine
- Foaming of the coolant

Note: Air pockets can form in the cooling system if the cooling system is filled at a rate that is greater than 5 L (1.3 US gal) per minute.

After you drain the cooling system and after you refill the cooling system, operate the engine. Operate the engine without the filler cap until the coolant reaches normal operating temperature and the coolant level stabilizes. Ensure that the coolant is maintained to the proper level.

NOTICE
Never operate an engine without water temperature regulators in the cooling system. Water temperature regulators help to maintain the engine coolant at the proper operating temperature. Cooling system problems can develop without water temperature regulators.

Refer to Special Instruction, SEBD0518, “Know Your Cooling System” and Special Instruction, SEBD0970, “Coolant and Your Engine” for more detailed information.

Many engine failures are related to the cooling system. The following problems are related to cooling system failures: overheating, leakage of the water pump, plugged radiators or heat exchangers, and pitting of the cylinder liners.

These failures can be avoided with proper cooling system maintenance. Cooling system maintenance is as important as maintenance of the fuel system and the lubrication system. Quality of the coolant is as important as the quality of the fuel and the lubricating oil.

Coolant is normally composed of three elements: water, additives, and glycol.

Water

NOTICE
Never use water alone without Supplemental Coolant Additives (SCA) or without inhibited coolant. Water alone is corrosive at engine operating temperatures. Water alone does not provide adequate protection against boiling or freezing.

Water is used in the cooling system in order to transfer heat.

Distilled water or deionized water is recommended for use in engine cooling systems.

DO NOT use the following types of water in cooling systems: hard water, softened water that has been conditioned with salt, and sea water.

If distilled water or deionized water is not available, use water with the properties that are listed in Table 20.

Table 20

Caterpillar Minimum Acceptable Water Requirements		
Property	**Maximum Limit**	**ASTM Test**
Chloride (Cl)	40 mg/L (2.4 grains/US gal)	“D512”, “D4327”
Sulfate (SO_4)	100 mg/L (5.9 grains/US gal)	“D516”
Total Hardness	170 mg/L (10 grains/US gal)	“D1126”
Total Solids	340 mg/L (20 grain/US gal)	“D1888”
Acidity	pH of 5.5 to 9.0	“D1293”

For a water analysis, consult one of the following sources:

- Caterpillar dealer
- Local water utility company
- Agricultural agent
- Independent laboratory

Additives

Additives help to protect the metal surfaces of the cooling system. A lack of coolant additives or insufficient amounts of additives enable the following conditions to occur:

- Corrosion
- Formation of mineral deposits
- Rust
- Scale
- Pitting and erosion from cavitation of the cylinder liner
- Foaming of the coolant

Many additives are depleted during engine operation. These additives must be replaced periodically. This can be done by adding Supplemental Coolant Additives (SCA) to Diesel Engine Antifreeze/Coolant (DEAC) or by adding ELC Extender to Extended Life Coolant (ELC).

Additives must be added at the proper concentration. Overconcentration of additives can cause the inhibitors to drop out-of-solution. The deposits can enable the following problems to occur:

- Formation of gel compounds
- Reduction of heat transfer
- Leakage of the water pump seal
- Plugging of radiators, coolers, and small passages

Glycol

Glycol in the coolant helps to provide protection against the following conditions:

- Boiling
- Freezing
- Cavitation of the water pump and the cylinder liner

For optimum performance, Caterpillar recommends a 1:1 mixture of a water/glycol solution.

Note: Use a mixture that will provide protection against the lowest ambient temperature.

Note: 100 percent pure glycol will freeze at a temperature of −23 °C (−9 °F).

Most conventional heavy-duty Coolants use ethylene glycol. Propylene glycol may also be used. In a 1:1 mixture with water, ethylene and propylene glycol provide similar protection against freezing and boiling. See Tables 21 and 22.

Table 21

Ethylene Glycol		
Concentration	**Freeze Protection**	**Boil Protection**
50 Percent	−36 °C (−33 °F)	106 °C (223 °F)
60 Percent	−51 °C (−60 °F)	111 °C (232 °F)

NOTICE
Do not use propylene glycol in concentrations that exceed 50 percent glycol because of propylene glycol's reduced heat transfer capability. Use ethylene glycol in conditions that require additional protection against boiling or freezing.

Table 22

Propylene Glycol		
Concentration	**Freeze Protection**	**Anti-Boil Protection**
50 Percent	−29 °C (−20 °F)	106 °C (223 °F)

To check the concentration of glycol, use the 1U-7298 Coolant/Battery Tester (Degrees Celsius) or use the 1U-7297 Coolant/Battery Tester (Degrees Fahrenheit). The testers give readings that are immediate and accurate. The testers can be used with ethylene or propylene glycol.

Coolant Recommendations

NOTICE
Do not use a commercial coolant/antifreeze that only meets the ASTM D3306 specification. This type of coolant/antifreeze is made for light duty automotive applications.

The following two coolants are used in Caterpillar diesel engines:

Preferred – Caterpillar Extended Life Coolant (ELC) or a commercial extended life coolant that meets the Caterpillar EC-1 specification

Acceptable – Caterpillar Diesel Engine Antifreeze (DEAC) or a commercial heavy-duty coolant that meets “ASTM D4985”, or “ASTM D6210” specifications

Caterpillar recommends a 1:1 mixture of water and glycol. This mixture of water and glycol will provide optimum heavy-duty performance as a coolant.

Note: Caterpillar DEAC does not require a treatment with an SCA at the initial fill. A commercial heavy-duty coolant that meets “ASTM D4985” or “ASTM D6210” specifications MAY require a treatment with an SCA at the initial fill. These coolants WILL require a treatment with an SCA on a maintenance basis.

Refer to Special Publication, SEBU6251, “Caterpillar Commercial Diesel Engine Fluids Recommendations” for additional information that relates to coolant.

S·O·S Coolant Analysis

Table 23

Recommended Interval		
Type of Coolant	**Level 1**	**Level 2**
DEAC	Every 250 Hours	Yearly(1)
ELC	Not Required	Yearly

(1) The Level 2 Coolant Analysis should be performed sooner if a problem is identified by a Level 1 Coolant Analysis.

S·O·S Coolant Analysis (Level 1)

A coolant analysis (Level 1) is a test of the properties of the coolant.

The following properties of the coolant are tested:

- Glycol concentration for freeze protection and boil protection
- Ability to protect from erosion and corrosion
- pH
- Conductivity
- Visual analysis
- Odor analysis

The results are reported, and appropriate recommendations are made.

Refer to the Maintenance Interval Schedule in this Operation and Maintenance Manual, “Cooling System Coolant Sample (Level 1) - Obtain” for a sampling location and the maintenance interval for collecting the coolant samples.

S·O·S Coolant Analysis (Level 2)

A coolant analysis (Level 2) is a comprehensive chemical evaluation of the coolant. This analysis is also a check of the overall condition of the inside of the cooling system.

The S·O·S Coolant Analysis has the following features:

- Full coolant analysis (Level 1)
- Identification of the source of metal corrosion and of contaminants
- Water hardness
- Identification of buildup of the impurities that cause corrosion
- Identification of buildup of the impurities that cause scaling

The results are reported, and appropriate recommendations are made.

Refer to the Maintenance Interval Schedule in this Operation and Maintenance Manual, “Cooling System Coolant Sample (Level 2) - Obtain” for a sampling location and the maintenance interval for collecting the coolant samples.

Testing the engine coolant is important to ensure that the engine is protected from internal cavitation and from corrosion. The analysis also tests the ability of the coolant to protect the engine from boiling and from freezing. The S·O·S Coolant Analysis can be done at your Caterpillar dealer. Caterpillar S·O·S Coolant Analysis is the best way to monitor the condition of your coolant and your cooling system. S·O·S Coolant Analysis is a program that is based on periodic samples.

Refer to Special Publication, SEBU6251, “Caterpillar Commercial Diesel Engine Fluids Recommendations” for additional information.

Refill Capacity of the Cooling System

To maintain the cooling system, the Total Cooling System capacity must be known. The approximate capacity for the “Engine Only” cooling system is listed. External System capacities will vary among applications. Refer to the OEM specifications for the External System capacity. This capacity information will be needed in order to determine the amount of coolant that is required for the Total Cooling System.

Table 24

C0.5 Engine Approximate Refill Capacities		
Compartment or System	**Liters**	**Quarts**
Engine Only	1.1	1.2
External System (OEM)(1)		
Total Cooling System(2)		

(1) The External System includes a radiator or an expansion tank with the following components: heat exchanger, aftercooler, and piping. Enter the capacity for the External System in this row. Refer to either Caterpillar specifications or OEM specifications for further information.

(2) The Total Cooling System includes the capacity for the “Engine Only” plus the capacity for the External System. Enter the total in this row.

Table 25

C0.7 Engine Approximate Refill Capacities		
Compartment or System	**Liters**	**Quarts**
Engine Only	1.2	1.3
External System (OEM)(1)		
Total Cooling System(2)		

(1) The External System includes a radiator or an expansion tank with the following components: heat exchanger, aftercooler, and piping. Enter the capacity for the External System in this row. Refer to either Caterpillar specifications or OEM specifications for further information.

(2) The Total Cooling System includes the capacity for the “Engine Only” plus the capacity for the External System. Enter the total in this row.

Table 26

C1.1 Engine Approximate Refill Capacities		
Compartment or System	**Liters**	**Quarts**
Engine Only	1.9	2.0
External System (OEM)(1)		
Total Cooling System(2)		

(1) The External System includes a radiator or an expansion tank with the following components: heat exchanger, aftercooler, and piping. Enter the capacity for the External System in this row. Refer to either Caterpillar specifications or OEM specifications for further information.

(2) The Total Cooling System includes the capacity for the “Engine Only” plus the capacity for the External System. Enter the total in this row.

Table 27

C1.5 Turbocharged Engines and Naturally Aspirated Engines Approximate Refill Capacities		
Compartment or System	**Liters**	**Quarts**
Engine Only	2.6	2.7
External System (OEM)(1)		
Total Cooling System(2)		

(1) The External System includes a radiator or an expansion tank with the following components: heat exchanger, aftercooler, and piping. Enter the capacity for the External System in this row. Refer to either Caterpillar specifications or OEM specifications for further information.

(2) The Total Cooling System includes the capacity for the “Engine Only” plus the capacity for the External System. Enter the total in this row.

Table 28

C1.6 Engine Approximate Refill Capacities		
Compartment or System	**Liters**	**Quarts**
Engine Only	2.4	2.5
External System (OEM)(1)		
Total Cooling System(2)		

(1) The External System includes a radiator or an expansion tank with the following components: heat exchanger, aftercooler, and piping. Enter the capacity for the External System in this row. Refer to either Caterpillar specifications or OEM specifications for further information.

(2) The Total Cooling System includes the capacity for the “Engine Only” plus the capacity for the External System. Enter the total in this row.

Table 29

C2.2 Turbocharged engines and Naturally Aspirated Engines Approximate Refill Capacities		
Compartment or System	**Liters**	**Quarts**
Engine Only	3.6	3.8
External System (OEM)(1)		
Total Cooling System(2)		

(1) The External System includes a radiator or an expansion tank with the following components: heat exchanger, aftercooler, and piping. Enter the capacity for the External System in this row. Refer to either Caterpillar specifications or OEM specifications for further information.

(2) The Total Cooling System includes the capacity for the “Engine Only” plus the capacity for the External System. Enter the total in this row.

Maintenance Recommendations

i02909163

System Pressure Release

SMCS Code: 1250; 1300; 1350; 5050

Coolant System

⚠ WARNING

Pressurized system: Hot coolant can cause serious burn. To open cap, stop engine, wait until radiator is cool. Then loosen cap slowly to relieve the pressure.

To relieve the pressure from the coolant system, turn off the engine. Allow the cooling system pressure cap to cool. Remove the cooling system pressure cap slowly in order to relieve pressure.

Fuel System

To relieve the pressure from the fuel system, turn off the engine.

High Pressure Fuel Lines (If Equipped)

⚠ WARNING

Contact with high pressure fuel may cause fluid penetration and burn hazards. High pressure fuel spray may cause a fire hazard. Failure to follow these inspection, maintenance and service instructions may cause personal injury or death.

The high pressure fuel lines are the fuel lines that are between the high pressure fuel pump and the high pressure fuel manifold and the fuel lines that are between the fuel manifold and cylinder head. These fuel lines are different from fuel lines on other fuel systems.

This is because of the following differences:

- The high pressure fuel lines are constantly charged with high pressure.
- The internal pressures of the high pressure fuel lines are higher than other types of fuel system.

Before any service or repair is performed on the engine fuel lines, perform the following tasks:

1. Stop the engine.
2. Wait for ten minutes.

Do not loosen the high pressure fuel lines in order to remove air pressure from the fuel system.

Engine Oil

To relieve pressure from the lubricating system, turn off the engine.

i03642798

Welding on Engines with Electronic Controls

SMCS Code: 1000

NOTICE
Because the strength of the frame may decrease, some manufacturers do not recommend welding onto a chassis frame or rail. Consult the OEM of the equipment or your Caterpillar dealer regarding welding on a chassis frame or rail.

Proper welding procedures are necessary in order to avoid damage to the engine's ECM, sensors, and associated components. When possible, remove the component from the unit and then weld the component. If removal of the component is not possible, the following procedure must be followed when you weld on a unit that is equipped with a Caterpillar Electronic Engine. The following procedure is considered to be the safest procedure to weld on a component. This procedure should provide a minimum risk of damage to electronic components.

NOTICE
Do not ground the welder to electrical components such as the ECM or sensors. Improper grounding can cause damage to the drive train, the bearings, hydraulic components, electrical components, and other components.

Do not ground the welder across the centerline of the package. Improper grounding could cause damage to the bearings, the crankshaft, the rotor shaft, and other components.

Clamp the ground cable from the welder to the component that will be welded. Place the clamp as close as possible to the weld. This will help reduce the possibility of damage.

Note: Perform the welding in areas that are free from explosive hazards.

1. Stop the engine. Turn the switched power to the OFF position.

2. Disconnect the negative battery cable from the battery. If a battery disconnect switch is provided, open the switch.

3. Disconnect the J1/P1 and J2/P2 connectors from the ECM. Move the harness to a position that will not allow the harness to accidentally move back and make contact with any of the ECM pins.

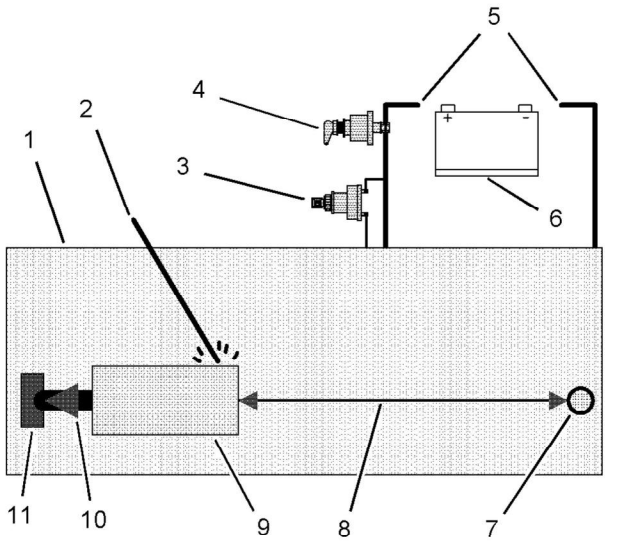

Illustration 36 g01075639

Use the example above. The current flow from the welder to the ground clamp of the welder will not cause damage to any associated components.

(1) Engine
(2) Welding electrode
(3) Keyswitch in the OFF position
(4) Battery disconnect switch in the open position
(5) Disconnected battery cables
(6) Battery
(7) Electrical/Electronic component
(8) Minimum distance between the component that is being welded and any electrical/electronic component
(9) The component that is being welded
(10) Current path of the welder
(11) Ground clamp for the welder

4. Connect the welding ground cable directly to the part that will be welded. Place the ground cable as close as possible to the weld in order to reduce the possibility of welding current damage to bearings, hydraulic components, electrical components, and ground straps.

Note: If electrical/electronic components are used as a ground for the welder, or electrical/electronic components are located between the welder ground and the weld, current flow from the welder could severely damage the component.

5. Protect the wiring harness from welding debris and spatter.

6. Use standard welding practices to weld the materials.

i03659171

Maintenance Interval Schedule

SMCS Code: 1000; 7500

When Required

Battery - Replace 66
Battery or Battery Cable - Disconnect 67
Engine - Clean 77
Engine Air Cleaner Element (Dual Element) - Clean/Replace 77
Engine Air Cleaner Element (Single Element) - Inspect/Replace 80
Fuel System - Prime 90
Severe Service Application - Check 101

Daily

Cooling System Coolant Level - Check 72
Driven Equipment - Check 76
Engine Air Cleaner Service Indicator - Inspect 81
Engine Air Precleaner - Check/Clean 82
Engine Oil Level - Check 84
Fuel System Primary Filter/Water Separator - Drain 94
Walk-Around Inspection 104

Every 50 Service Hours or Weekly

Fuel Tank Water and Sediment - Drain 97

Every 250 Service Hours

Cooling System Coolant Sample (Level 1) - Obtain 73

Every 250 Service Hours or 6 Months

Alternator and Fan Belts - Inspect/Adjust 64
Engine Oil Sample - Obtain 85

Every 250 Service Hours or 1 Year

Cooling System Supplemental Coolant Additive (SCA) - Test/Add 74

Initial 500 Hours (for New Systems, Refilled Systems, and Converted Systems)

Cooling System Coolant Sample (Level 2) - Obtain 74

Every 500 Service Hours

Fuel System Secondary Filter - Replace 95

Every 500 Service Hours or 1 Year

Battery Electrolyte Level - Check 67
Cooling System Supplemental Coolant Additive (SCA) - Test/Add 74
Engine Air Cleaner Element (Dual Element) - Clean/Replace 77
Engine Oil and Filter - Change 86
Engine Protective Devices - Check 88
Hoses and Clamps - Inspect/Replace 98
Radiator - Clean 100

Every 1000 Service Hours

Alternator and Fan Belts - Replace 65
Engine Valve Lash - Inspect/Adjust 88
Turbocharger - Inspect 103

Every 2000 Service Hours

Aftercooler Core - Inspect 63
Alternator - Inspect 64
Engine Crankcase Breather - Replace 83
Engine Mounts - Inspect 84
Starting Motor - Inspect 102

Every Year

Cooling System Coolant Sample (Level 2) - Obtain 74

Every 3000 Service Hours

Fuel Injector - Test/Change 89
Water Pump - Inspect 105

Every 3000 Service Hours or 2 Years

Cooling System Coolant (DEAC) - Change 68
Cooling System Water Temperature Regulator - Replace 76

Every 4000 Service Hours

Aftercooler Core - Clean/Test 63

Every 6000 Service Hours or 3 Years

Cooling System Coolant Extender (ELC) - Add 71

Every 12 000 Service Hours or 6 Years

Cooling System Coolant (ELC) - Change 70

Overhaul

Overhaul Considerations 99

i03632427

Aftercooler Core - Clean/Test (Air-To-Air Aftercooler)

SMCS Code: 1064-070; 1064-081

S/N: G7L1-Up

S/N: C6M1-Up

S/N: C8Y1-Up

The air-to-air aftercooler is OEM installed in many applications. Please refer to the OEM specifications for information that is related to the aftercooler.

i03632432

Aftercooler Core - Inspect

SMCS Code: 1064-040

S/N: G7L1-Up

S/N: C6M1-Up

S/N: C8Y1-Up

Note: Adjust the frequency of cleaning according to the effects of the operating environment.

Inspect the aftercooler for these items: damaged fins, corrosion, dirt, grease, insects, leaves, oil, and other debris. Clean the aftercooler, if necessary.

For air-to-air aftercoolers, use the same methods that are used for cleaning radiators.

⚠ WARNING

Personal injury can result from air pressure.

Personal injury can result without following proper procedure. When using pressure air, wear a protective face shield and protective clothing.

Maximum air pressure at the nozzle must be less than 205 kPa (30 psi) for cleaning purposes.

Pressurized air is the preferred method for removing loose debris. Direct the air in the opposite direction of the fan's air flow. Hold the nozzle approximately 6 mm (.25 inch) away from the fins. Slowly move the air nozzle in a direction that is parallel with the tubes. This will remove debris that is between the tubes.

Pressurized water may also be used for cleaning. The maximum water pressure for cleaning purposes must be less than 275 kPa (40 psi). Use pressurized water in order to soften mud. Clean the core from both sides.

Use a degreaser and steam for removal of oil and grease. Clean both sides of the core. Wash the core with detergent and hot water. Thoroughly rinse the core with clean water.

After cleaning, start the engine and accelerate the engine to high idle rpm. This will help in the removal of debris and drying of the core. Stop the engine. Use a light bulb behind the core in order to inspect the core for cleanliness. Repeat the cleaning, if necessary.

Inspect the fins for damage. Bent fins may be opened with a “comb”.

Note: If parts of the aftercooler system are repaired or replaced, a leak test is highly recommended. The FT1984 Aftercooler Testing Group is used to perform leak tests on the aftercooler. Refer to the Systems Operation/Testing and Adjusting, “Aftercooler - Test” and the Special Instruction, SEHS8622 for the proper testing procedure.

Inspect these items for good condition: welds, mounting brackets, air lines, connections, clamps, and seals. Make repairs, if necessary.

For more detailed information on cleaning and inspection, see Special Publication, SEBD0518, “Know Your Cooling System”.

i02676048

Alternator - Inspect

SMCS Code: 1405-040

S/N: C6F1-Up

S/N: C7H1-Up

S/N: C6J1-Up

S/N: C6L1-Up

S/N: G7L1-Up

S/N: C6M1-Up

S/N: C6N1-Up

S/N: C8W1-Up

S/N: C7Y1-Up

S/N: C8Y1-Up

Caterpillar recommends a scheduled inspection of the alternator. Inspect the alternator for loose connections and proper battery charging. Inspect the ammeter (if equipped) during engine operation in order to ensure proper battery performance and/or proper performance of the electrical system. Make repairs, as required.

Check the alternator and the battery charger for proper operation. If the batteries are properly charged, the ammeter reading should be very near zero. All batteries should be kept charged. The batteries should be kept warm because temperature affects the cranking power. If the battery is too cold, the battery will not crank the engine. The battery will not crank the engine, even if the engine is warm. When the engine is not run for long periods of time or if the engine is run for short periods, the batteries may not fully charge. A battery with a low charge will freeze more easily than a battery with a full charge.

i02226340

Alternator and Fan Belts - Inspect/Adjust

SMCS Code: 1357-025; 1357-040

S/N: C6F1-Up

S/N: C7H1-Up

S/N: C6J1-Up

S/N: C6L1-Up

S/N: G7L1-Up

S/N: C6M1-Up

S/N: C6N1-Up

S/N: C8W1-Up

S/N: C7Y1-Up

S/N: C8Y1-Up

Inspection

To maximize the engine performance, inspect the belts for wear and for cracking. Replace belts that are worn or damaged.

For applications that require multiple drive belts, replace the belts in matched sets. Replacing only one belt of a matched set will cause the new belt to carry more load because the older belt is stretched. The additional load on the new belt could cause the new belt to break.

If the belts are too loose, vibration causes unnecessary wear on the belts and pulleys. Loose belts may slip enough to cause overheating.

To accurately check the belt tension, Gauge 144-0235 Belt Tension Gauge should be used.

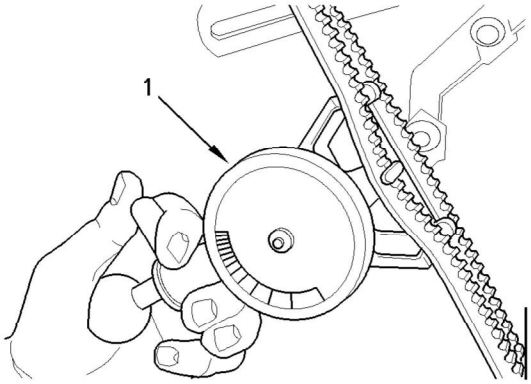

Illustration 37 g01003936

Typical example

(1) 144-0235 Belt Tension Gauge

Install the gauge (1) at the center of the belt between the alternator and the crankshaft pulley and check the belt tension. The correct tension for a new belt is 400 N (90 lb) to 489 N (110 lb). The correct tension for a used belt that has been in operation for 30 minutes or more at the rated speed is 267 N (60 lb) to 356 N (80 lb).

If twin belts are installed, check and adjust the tension on both belts.

Adjustment

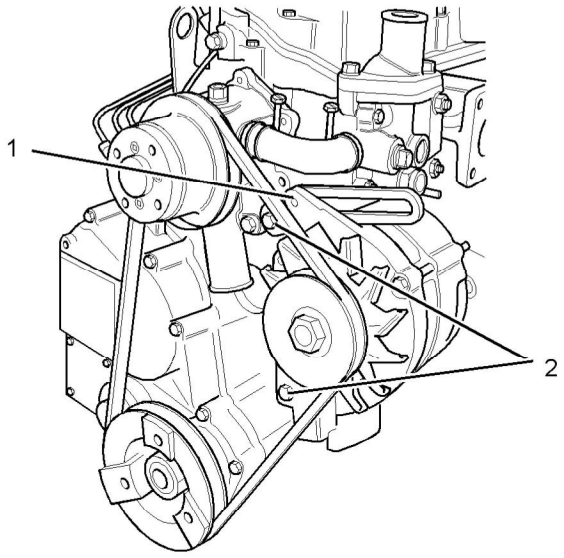

Illustration 38 g01091158

Typical example

(1) Adjusting bolt
(2) Mounting bolts

1. Loosen the mounting bolts (2) and the adjusting bolt (1).
2. Move the alternator in order to increase or decrease the belt tension.
3. Tighten the adjusting bolt (1). Tighten the mounting bolts (2). Refer to the Specifications Manual for the correct torque settings.

i02226343

Alternator and Fan Belts - Replace

SMCS Code: 1357-510

S/N: C6F1-Up

S/N: C7H1-Up

S/N: C6J1-Up

S/N: C6L1-Up

S/N: G7L1-Up

S/N: C6M1-Up

S/N: C6N1-Up

S/N: C8W1-Up

S/N: C7Y1-Up

S/N: C8Y1-Up

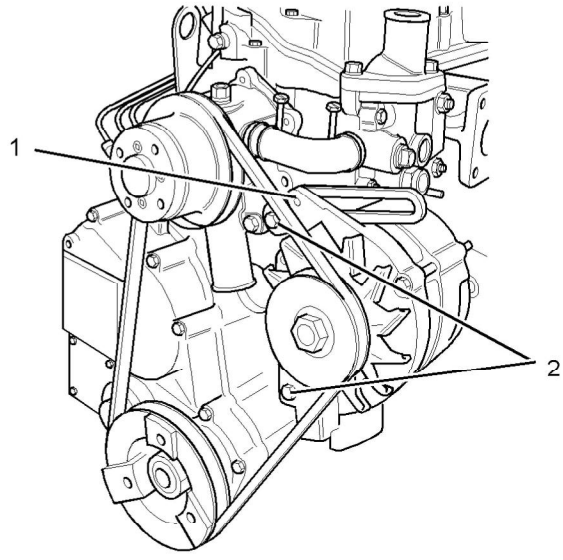

Illustration 39 g01091158

Typical example

(1) Adjusting bolt
(2) Mounting bolts

For applications that require multiple drive belts, replace the belts in matched sets. Replacing only one belt of a matched set will cause the new belt to carry more load because the older belt is stretched. The additional load on the new belt could cause the new belt to break.

Note: When new belts are installed, check the belt tension again after 20 hours of engine operation.

Refer to the Disassembly and Assembly Manual for the installation procedure and the removal procedure for the belt.

i02153996

Battery - Replace

SMCS Code: 1401-510

S/N: C6F1-Up

S/N: C7H1-Up

S/N: C6J1-Up

S/N: C6L1-Up

S/N: G7L1-Up

S/N: C6M1-Up

S/N: C6N1-Up

S/N: C8W1-Up

S/N: C7Y1-Up

S/N: C8Y1-Up

⚠ WARNING

Batteries give off combustible gases which can explode. A spark can cause the combustible gases to ignite. This can result in severe personal injury or death.

Ensure proper ventilation for batteries that are in an enclosure. Follow the proper procedures in order to help prevent electrical arcs and/or sparks near batteries. Do not smoke when batteries are serviced.

⚠ WARNING

The battery cables or the batteries should not be removed with the battery cover in place. The battery cover should be removed before any servicing is attempted.

Removing the battery cables or the batteries with the cover in place may cause a battery explosion resulting in personal injury.

1. Turn the key start switch to the OFF position. Remove the key and all electrical loads.
2. Turn OFF the battery charger. Disconnect the charger.
3. The NEGATIVE “-” cable connects the NEGATIVE “-” battery terminal to the ground plane. Disconnect the cable from the NEGATIVE “-” battery terminal.
4. The POSITIVE “+” cable connects the POSITIVE “+” battery terminal to the starting motor. Disconnect the cable from the POSITIVE “+” battery terminal.

Note: Always recycle a battery. Never discard a battery. Return used batteries to an appropriate recycling facility.

5. Remove the used battery.
6. Install the new battery.

Note: Before the cables are connected, ensure that the key start switch is OFF.

7. Connect the cable from the starting motor to the POSITIVE “+” battery terminal.
8. Connect the cable from the ground plane to the NEGATIVE “-” battery terminal.

i02601752

Battery Electrolyte Level - Check

SMCS Code: 1401-535

S/N: C6F1-Up

S/N: C7H1-Up

S/N: C6J1-Up

S/N: C6L1-Up

S/N: G7L1-Up

S/N: C6M1-Up

S/N: C6N1-Up

S/N: C8W1-Up

S/N: C7Y1-Up

S/N: C8Y1-Up

When the engine is not run for long periods of time or when the engine is run for short periods, the batteries may not fully recharge. Ensure a full charge in order to help prevent the battery from freezing.

⚠ WARNING

All lead-acid batteries contain sulfuric acid which can burn the skin and clothing. Always wear a face shield and protective clothing when working on or near batteries.

1. Remove the filler caps. Maintain the electrolyte level to the “FULL” mark on the battery.

   If the addition of water is necessary, use distilled water. If distilled water is not available use clean water that is low in minerals. Do not use artificially softened water.

2. Check the condition of the electrolyte with the 245-5829 Coolant Battery Tester Refractometer.

3. Keep the batteries clean.

   Clean the battery case with one of the following cleaning solutions:

   - A mixture of 0.1 kg (0.2 lb) of baking soda and 1 L (1 qt) of clean water
   - A mixture of 0.1 L (0.11 qt) of ammonia and 1 L (1 qt) of clean water

   Thoroughly rinse the battery case with clean water. Use a fine grade of sandpaper to clean the terminals and the cable clamps. Clean the items until the surfaces are bright or shiny. DO NOT remove material excessively. Excessive removal of material can cause the clamps to not fit properly. Coat the clamps and the terminals with 5N-5561 Silicone Lubricant, petroleum jelly or MPGM.

i01492654

Battery or Battery Cable - Disconnect

SMCS Code: 1402-029

S/N: C6F1-Up

S/N: C7H1-Up

S/N: C6J1-Up

S/N: C6L1-Up

S/N: G7L1-Up

S/N: C6M1-Up

S/N: C6N1-Up

S/N: C8W1-Up

S/N: C7Y1-Up

S/N: C8Y1-Up

⚠ WARNING

The battery cables or the batteries should not be removed with the battery cover in place. The battery cover should be removed before any servicing is attempted.

Removing the battery cables or the batteries with the cover in place may cause a battery explosion resulting in personal injury.

1. Turn the start switch to the OFF position. Turn the ignition switch (if equipped) to the OFF position and remove the key and all electrical loads.

2. Disconnect the negative battery terminal at the battery that goes to the start switch. Ensure that the cable cannot contact the terminal. When four 12 volt batteries are involved, the negative side of two batteries must be disconnected.

3. Tape the leads in order to help prevent accidental starting.

4. Proceed with necessary system repairs. Reverse the steps in order to reconnect all of the cables.

i02789695

Cooling System Coolant (DEAC) - Change

SMCS Code: 1350-070; 1395-044

S/N: C6F1-Up

S/N: C7H1-Up

S/N: C6J1-Up

S/N: C6L1-Up

S/N: G7L1-Up

S/N: C6M1-Up

S/N: C6N1-Up

S/N: C8W1-Up

S/N: C7Y1-Up

S/N: C8Y1-Up

Clean the cooling system and flush the cooling system before the recommended maintenance interval if the following conditions exist:

- The engine overheats frequently.
- Foaming is observed.
- The oil has entered the cooling system and the coolant is contaminated.
- The fuel has entered the cooling system and the coolant is contaminated.

NOTICE
Use of commercially available cooling system cleaners may cause damage to cooling system components. Use only cooling system cleaners that are approved for Caterpillar engines.

Note: Inspect the water pump and the water temperature regulator after the cooling system has been drained. This is a good opportunity to replace the water pump, the water temperature regulator and the hoses, if necessary.

Drain

⚠ WARNING

Pressurized System: Hot coolant can cause serious burns. To open the cooling system filler cap, stop the engine and wait until the cooling system components are cool. Loosen the cooling system pressure cap slowly in order to relieve the pressure.

1. Stop the engine and allow the engine to cool. Loosen the cooling system filler cap slowly in order to relieve any pressure. Remove the cooling system filler cap.

Note: Refer to Operation and Maintenance Manual, “General Hazard Information” for information on Containing Fluid Spillage.

2. Open the cooling system drain valve (if equipped). If the cooling system is not equipped with a drain valve, remove one of the drain plugs.

   Allow the coolant to drain into a suitable container.

3. Properly dispose of the drained material. Obey local regulations for the disposal of the material.

NOTICE
Dispose of used engine coolant properly or recycle. Various methods have been proposed to reclaim used coolant for reuse in engine cooling systems. The full distillation procedure is the only method acceptable by Caterpillar to reclaim the used coolant.

Flush

1. Flush the cooling system with clean water in order to remove any debris.

2. Close the drain valve (if equipped). Clean the drain plugs. Install the drain plugs. Refer to Torque Specifications, SENR3130 for more information on the correct torques.

NOTICE
Do not fill the cooling system faster than 5 L (1.3 US gal) per minute to avoid air locks.

Cooling system air locks may result in engine damage.

3. Fill the cooling system with a mixture of clean water and Caterpillar Fast Acting Cooling System Cleaner. Add 0.5 L (1 pint) of cleaner per 15 L (4 US gal) of the cooling system capacity. Install the cooling system filler cap.

4. Start and run the engine at low idle for a minimum of 30 minutes. The coolant temperature should be at least 82 °C (180 °F).

NOTICE
Improper or incomplete rinsing of the cooling system can result in damage to copper and other metal components.

To avoid damage to the cooling system, make sure to completely flush the cooling system with clear water. Continue to flush the system until all signs of the cleaning agent are gone.

5. Stop the engine and allow the engine to cool. Loosen the cooling system filler cap slowly in order to relieve any pressure. Remove the cooling system filler cap. Open the drain valve (if equipped) or remove the cooling system drain plugs. Allow the water to drain. Flush the cooling system with clean water. Close the drain valve (if equipped). Clean the drain plugs. Install the drain plugs. Refer to Torque Specifications, SENR3130 for more information on the correct torques.

Cooling Systems with Heavy Deposits or Plugging

Note: For the following procedure to be effective, there must be some active flow through the cooling system components.

1. Flush the cooling system with clean water in order to remove any debris.

2. Close the drain valve (if equipped). Clean the drain plugs. Install the drain plugs. Refer to Torque Specifications, SENR3130 for more information on the correct torques.

NOTICE
Do not fill the cooling system faster than 5 L (1.3 US gal) per minute to avoid air locks.

Cooling system air locks may result in engine damage.

3. Fill the cooling system with a mixture of clean water and Caterpillar Fast Acting Cooling System Cleaner. Add 0.5 L (1 pint) of cleaner per 3.8 to 7.6 L (1 to 2 US gal) of the cooling system capacity. Install the cooling system filler cap.

4. Start and run the engine at low idle for a minimum of 90 minutes. The coolant temperature should be at least 82 °C (180 °F).

NOTICE
Improper or incomplete rinsing of the cooling system can result in damage to copper and other metal components.

To avoid damage to the cooling system, make sure to completely flush the cooling system with clear water. Continue to flush the system until all signs of the cleaning agent are gone.

5. Stop the engine and allow the engine to cool. Loosen the cooling system filler cap slowly in order to relieve any pressure. Remove the cooling system filler cap. Open the drain valve (if equipped) or remove the cooling system drain plugs. Allow the water to drain. Flush the cooling system with clean water. Close the drain valve (if equipped). Clean the drain plugs. Install the drain plugs. Refer to Torque Specifications, SENR3130 for more information on the correct torques.

Fill

NOTICE
Do not fill the cooling system faster than 5 L (1.3 US gal) per minute to avoid air locks.

Cooling system air locks may result in engine damage.

1. Fill the cooling system with the coolant/antifreeze. Refer to this Operation and Maintenance Manual, “Refill Capacities and Recommendations” topic (Maintenance Section) for more information on cooling system specifications. Do not install the cooling system filler cap.

2. Start and run the engine at low idle. Increase the engine rpm to 1500 rpm. Run the engine at high idle for one minute in order to purge the air from the cavities of the engine block. Stop the engine.

3. Check the coolant level. Maintain the coolant level within 13 mm (0.5 inch) below the bottom of the pipe for filling. Maintain the coolant level within 13 mm (0.5 inch) to the proper level on the sight glass (if equipped).

4. Clean the cooling system filler cap. Inspect the gasket that is on the cooling system filler cap. If the gasket that is on the cooling system filler cap is damaged, discard the old cooling system filler cap and install a new cooling system filler cap. If the gasket that is on the cooling system filler cap is not damaged, perform a pressure test. A 9S-8140 Pressurizing Pump is used to perform the pressure test. The correct pressure for the cooling system filler cap is stamped on the face of the cooling system filler cap. If the cooling system filler cap does not retain the correct pressure, install a new cooling system filler cap.

5. Start the engine. Inspect the cooling system for leaks and for the correct operating temperature.

i02822203

Cooling System Coolant (ELC) - Change

SMCS Code: 1350-070; 1395-044

S/N: C6F1-Up

S/N: C7H1-Up

S/N: C6J1-Up

S/N: C6L1-Up

S/N: G7L1-Up

S/N: C6M1-Up

S/N: C6N1-Up

S/N: C8W1-Up

S/N: C7Y1-Up

S/N: C8Y1-Up

Clean the cooling system and flush the cooling system before the recommended maintenance interval if the following conditions exist:

- The engine overheats frequently.
- Foaming is observed.
- The oil has entered the cooling system and the coolant is contaminated.
- The fuel has entered the cooling system and the coolant is contaminated.

Note: When the cooling system is cleaned, only clean water is needed when the ELC is drained and replaced.

Note: Inspect the water pump and the water temperature regulator after the cooling system has been drained. This is a good opportunity to replace the water pump, the water temperature regulator and the hoses, if necessary.

Drain

⚠ WARNING

Pressurized System: Hot coolant can cause serious burns. To open the cooling system filler cap, stop the engine and wait until the cooling system components are cool. Loosen the cooling system pressure cap slowly in order to relieve the pressure.

1. Stop the engine and allow the engine to cool. Loosen the cooling system filler cap slowly in order to relieve any pressure. Remove the cooling system filler cap.

2. Open the cooling system drain valve (if equipped). If the cooling system is not equipped with a drain valve, remove the cooling system drain plugs.

   Allow the coolant to drain.

NOTICE
Dispose of used engine coolant properly or recycle. Various methods have been proposed to reclaim used coolant for reuse in engine cooling systems. The full distillation procedure is the only method acceptable by Caterpillar to reclaim the used coolant.

For information regarding the disposal and the recycling of used coolant, consult your Caterpillar dealer or consult Dealer Service Tools.

Flush

1. Flush the cooling system with clean water in order to remove any debris.

2. Close the drain valve (if equipped). Clean the drain plugs. Install the drain plugs. Refer to Torque Specifications, SENR3130 for more information on the correct torques.

NOTICE
Do not fill the cooling system faster than 5 L (1.3 US gal) per minute to avoid air locks.

Cooling system air locks may result in engine damage.

3. Fill the cooling system with clean water. Install the cooling system filler cap.

4. Start and run the engine at low idle until the temperature reaches 49 to 66 °C (120 to 150 °F).

5. Stop the engine and allow the engine to cool. Loosen the cooling system filler cap slowly in order to relieve any pressure. Remove the cooling system filler cap. Open the drain valve (if equipped) or remove the cooling system drain plugs. Allow the water to drain. Flush the cooling system with clean water. Close the drain valve (if equipped). Clean the drain plugs. Install the drain plugs. Refer to Torque Specifications, SENR3130 for more information on the correct torques.

Fill

NOTICE
Do not fill the cooling system faster than 5 L (1.3 US gal) per minute to avoid air locks.

Cooling system air locks may result in engine damage.

1. Fill the cooling system with Extended Life Coolant (ELC). Refer to this Operation and Maintenance Manual, “Refill Capacities and Recommendations” topic (Maintenance Section) for more information on cooling system specifications. Do not install the cooling system filler cap.

2. Start and run the engine at low idle. Increase the engine rpm to high idle. Run the engine at high idle for one minute in order to purge the air from the cavities of the engine block. Stop the engine.

3. Check the coolant level. Maintain the coolant level within 13 mm (0.5 inch) below the bottom of the pipe for filling. Maintain the coolant level within 13 mm (0.5 inch) to the proper level on the sight glass (if equipped).

4. Clean the cooling system filler cap. Inspect the gasket that is on the cooling system filler cap. If the gasket that is on the cooling system filler cap is damaged, discard the old cooling system filler cap and install a new cooling system filler cap. If the gasket that is on the cooling system filler cap is not damaged, use a 9S-8140 Pressurizing Pump in order to pressure test the cooling system filler cap. The correct pressure for the cooling system filler cap is stamped on the face of the cooling system filler cap. If the cooling system filler cap does not retain the correct pressure, install a new cooling system filler cap.

5. Start the engine. Inspect the cooling system for leaks and for proper operating temperature.

i02482066

Cooling System Coolant Extender (ELC) - Add

SMCS Code: 1352-045; 1395-081

S/N: C6F1-Up

S/N: C7H1-Up

S/N: C6J1-Up

S/N: C6L1-Up

S/N: G7L1-Up

S/N: C6M1-Up

S/N: C6N1-Up

S/N: C8W1-Up

S/N: C7Y1-Up

S/N: C8Y1-Up

Cat ELC (Extended Life Coolant) does not require the frequent additions of any supplemental cooling additives which are associated with the present conventional coolants. The Cat ELC Extender only needs to be added once.

NOTICE
Use only Cat Extended Life Coolant (ELC) Extender with Cat ELC.

Do NOT use conventional supplemental coolant additive (SCA) with Cat ELC. Mixing Cat ELC with conventional coolants and/or conventional SCA reduces the Cat ELC service life.

Check the cooling system only when the engine is stopped and cool.

⚠ WARNING

Personal injury can result from hot coolant, steam and alkali.

At operating temperature, engine coolant is hot and under pressure. The radiator and all lines to heaters or the engine contain hot coolant or steam. Any contact can cause severe burns.

Remove cooling system pressure cap slowly to relieve pressure only when engine is stopped and cooling system pressure cap is cool enough to touch with your bare hand.

Do not attempt to tighten hose connections when the coolant is hot, the hose can come off causing burns.

Cooling System Coolant Additive contains alkali. Avoid contact with skin and eyes.

NOTICE

Care must be taken to ensure that fluids are contained during performance of inspection, maintenance, testing, adjusting and repair of the product. Be prepared to collect the fluid with suitable containers before opening any compartment or disassembling any component containing fluids.

Refer to Special Publication, NENG2500, “Caterpillar Dealer Service Tool Catalog” for tools and supplies suitable to collect and contain fluids on Caterpillar products.

Dispose of all fluids according to local regulations and mandates.

1. Loosen the cooling system filler cap slowly in order to relieve pressure. Remove the cooling system filler cap.

2. It may be necessary to drain enough coolant from the cooling system in order to add the Cat ELC Extender.

3. Add Cat ELC Extender according to the requirements for your engine's cooling system capacity. Refer to the Operation and Maintenance Manual, “Refill Capacities and Recommendations” article for more information.

4. Clean the cooling system filler cap. Inspect the gaskets on the cooling system filler cap. Replace the cooling system filler cap if the gaskets are damaged. Install the cooling system filler cap.

i01197583

Cooling System Coolant Level - Check

SMCS Code: 1395-082

S/N: C6F1-Up

S/N: C7H1-Up

S/N: C6J1-Up

S/N: C6L1-Up

S/N: G7L1-Up

S/N: C6M1-Up

S/N: C6N1-Up

S/N: C8W1-Up

S/N: C7Y1-Up

S/N: C8Y1-Up

Check the coolant level when the engine is stopped and cool.

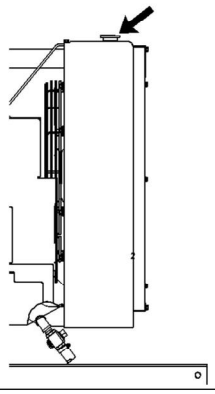

Illustration 40 g00285520

Cooling system filler cap

⚠ WARNING

Pressurized System: Hot coolant can cause serious burns. To open the cooling system filler cap, stop the engine and wait until the cooling system components are cool. Loosen the cooling system pressure cap slowly in order to relieve the pressure.

1. Remove the cooling system filler cap slowly in order to relieve pressure.

2. Maintain the coolant level within 13 mm (0.5 inch) of the bottom of the filler pipe. If the engine is equipped with a sight glass, maintain the coolant level to the proper level in the sight glass.

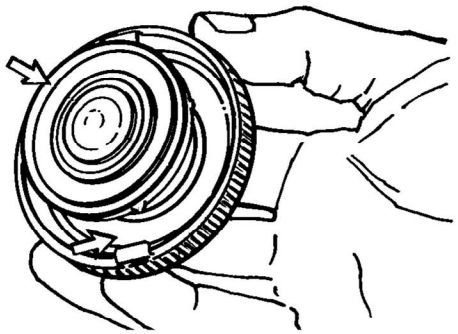

Illustration 41 g00103639

Typical filler cap gaskets

3. Clean the cooling system filler cap and check the condition of the filler cap gaskets. Replace the cooling system filler cap if the filler cap gaskets are damaged. Reinstall the cooling system filler cap.

4. Inspect the cooling system for leaks.

i02837191

Cooling System Coolant Sample (Level 1) - Obtain

SMCS Code: 1350-008; 1395-008; 1395-554; 7542

S/N: C6F1-Up

S/N: C7H1-Up

S/N: C6J1-Up

S/N: C6L1-Up

S/N: G7L1-Up

S/N: C6M1-Up

S/N: C6N1-Up

S/N: C8W1-Up

S/N: C7Y1-Up

S/N: C8Y1-Up

Note: Obtaining a Coolant Sample (Level 1) is optional if the cooling system is filled with Cat ELC (Extended Life Coolant). Cooling systems that are filled with Cat ELC should have a Coolant Sample (Level 2) that is obtained at the recommended interval that is stated in the Maintenance Interval Schedule.

Note: Obtain a Coolant Sample (Level 1) if the cooling system is filled with any other coolant instead of Cat ELC. This includes the following types of coolants:

- Commercial long life coolants that meet the Caterpillar Engine Coolant Specification -1 (Caterpillar EC-1)
- Cat DEAC (Diesel Engine Antifreeze/Coolant)
- Commercial heavy-duty coolant/antifreeze

Table 30

Recommended Interval		
Type of Coolant	**Level 1**	**Level 2**
Cat DEAC	Every 250 Hours(1)	Yearly(1)(2)
Cat ELC	Optional(2)	Yearly(2)

(1) This is the recommended interval for coolant samples for all conventional heavy-duty coolant/antifreeze. This is also the recommended interval for coolant samples of commercial coolants that meet the Cat EC-1 specification for engine coolant.
(2) The Level 2 Coolant Analysis should be performed sooner if a problem is suspected or identified.

NOTICE
Always use a designated pump for oil sampling, and use a separate designated pump for coolant sampling. Using the same pump for both types of samples may contaminate the samples that are being drawn. This contaminate may cause a false analysis and an incorrect interpretation that could lead to concerns by both dealers and customers.

Note: Level 1 results may indicate a need for Level 2 Analysis.

Obtain the sample of the coolant as close as possible to the recommended sampling interval. In order to receive the full effect of S·O·S analysis, you must establish a consistent trend of data. In order to establish a pertinent history of data, perform consistent samplings that are evenly spaced. Supplies for collecting samples can be obtained from your Caterpillar dealer.

Use the following guidelines for proper sampling of the coolant:

- Complete the information on the label for the sampling bottle before you begin to take the samples.
- Keep the unused sampling bottles stored in plastic bags.
- Obtain coolant samples directly from the coolant sample port. You should not obtain the samples from any other location.
- Keep the lids on empty sampling bottles until you are ready to collect the sample.

- Place the sample in the mailing tube immediately after obtaining the sample in order to avoid contamination.
- Never collect samples from expansion bottles.
- Never collect samples from the drain for a system.

Submit the sample for Level 1 analysis.

For additional information about coolant analysis, see this Operation and Maintenance Manual, “Refill Capacities and Recommendations” or consult your Caterpillar dealer.

i01987714

Cooling System Coolant Sample (Level 2) - Obtain

SMCS Code: 1350-008; 1395-008; 1395-554; 7542

S/N: C6F1-Up

S/N: C7H1-Up

S/N: C6J1-Up

S/N: C6L1-Up

S/N: G7L1-Up

S/N: C6M1-Up

S/N: C6N1-Up

S/N: C8W1-Up

S/N: C7Y1-Up

S/N: C8Y1-Up

NOTICE
Always use a designated pump for oil sampling, and use a separate designated pump for coolant sampling. Using the same pump for both types of samples may contaminate the samples that are being drawn. This contaminate may cause a false analysis and an incorrect interpretation that could lead to concerns by both dealers and customers.

Refer to Operation and Maintenance Manual, “Cooling System Coolant Sample (Level 1) - Obtain” for the guidelines for proper sampling of the coolant.

Submit the sample for Level 2 analysis.

For additional information about coolant analysis, see Special Publication, SEBU6251, “Caterpillar Commercial Diesel Engines Fluids Recommendations” or consult your Caterpillar dealer.

i02456600

Cooling System Supplemental Coolant Additive (SCA) - Test/Add

SMCS Code: 1352-045; 1395-081

S/N: C6F1-Up

S/N: C7H1-Up

S/N: C6J1-Up

S/N: C6L1-Up

S/N: G7L1-Up

S/N: C6M1-Up

S/N: C6N1-Up

S/N: C8W1-Up

S/N: C7Y1-Up

S/N: C8Y1-Up

WARNING

Cooling system coolant additive contains alkali. To help prevent personal injury, avoid contact with the skin and the eyes. Do not drink cooling system coolant additive.

Note: Test the concentration of the Supplemental Coolant Additive (SCA) or test the SCA concentration as part of an S·O·S Coolant Analysis.

Test for SCA Concentration

Coolant and SCA

NOTICE
Do not exceed the recommended six percent supplemental coolant additive concentration.

Use the 8T-5296 Coolant Conditioner Test Kit or use the 4C-9301 Coolant Conditioner Test Kit in order to check the concentration of the SCA. Refer to this Operation and Maintenance Manual, “Refill Capacities and Recommendations” for more information.

Water and SCA

NOTICE
Do not exceed the recommended eight percent supplemental coolant additive concentration.

Test the concentration of the SCA with the 8T-5296 Coolant Conditioner Test Kit. Refer to the Special Publication, SEBU6251, "Caterpillar Commercial Diesel Engine Fluids Recommendations" for more information.

S·O·S Coolant Analysis

S·O·S coolant samples can be analyzed at your Caterpillar dealer. S·O·S Coolant Analysis is a program that is based on periodic samples.

Level 1

Level 1 is a basic analysis of the coolant. The following items are tested:

- Glycol Concentration
- Concentration of SCA
- pH
- Conductivity

The results are reported, and recommendations are made according to the results. Consult your Caterpillar dealer for information on the benefits of managing your equipment with an S·O·S Coolant Analysis.

Level 2

This level coolant analysis is recommended when the engine is overhauled. Refer to this Operations and Maintenance Manual, "Overhaul Considerations" for further information.

Add the SCA, If Necessary

NOTICE

Do not exceed the recommended amount of supplemental coolant additive concentration. Excessive supplemental coolant additive concentration can form deposits on the higher temperature surfaces of the cooling system, reducing the engine's heat transfer characteristics. Reduced heat transfer could cause cracking of the cylinder head and other high temperature components. Excessive supplemental coolant additive concentration could also result in radiator tube blockage, overheating, and/or accelerated water pump seal wear. Never use both liquid supplemental coolant additive and the spin-on element (if equipped) at the same time. The use of those additives together could result in supplemental coolant additive concentration exceeding the recommended maximum.

WARNING

Pressurized System: Hot coolant can cause serious burns. To open the cooling system filler cap, stop the engine and wait until the cooling system components are cool. Loosen the cooling system pressure cap slowly in order to relieve the pressure.

1. Slowly loosen the cooling system filler cap in order to relieve the pressure. Remove the cooling system filler cap.

Note: Always discard drained fluids according to local regulations.

2. If necessary, drain some coolant from the cooling system into a suitable container in order to allow space for the extra SCA.

3. Add the proper amount of SCA. Refer to the Special Publication, SEBU6251, "Caterpillar Commercial Diesel Engines Fluids Recommendations" for more information on SCA requirements.

4. Clean the cooling system filler cap. Inspect the gaskets of the cooling system filler cap. If the gaskets are damaged, replace the old cooling system filler cap with a new cooling system filler cap. Install the cooling system filler cap.

i02625506

Cooling System Water Temperature Regulator - Replace

SMCS Code: 1355-510

S/N: C6F1-Up

S/N: C7H1-Up

S/N: C6J1-Up

S/N: C6L1-Up

S/N: G7L1-Up

S/N: C6M1-Up

S/N: C6N1-Up

S/N: C8W1-Up

S/N: C7Y1-Up

S/N: C8Y1-Up

Replace the water temperature regulator before the water temperature regulator fails. This is a recommended preventive maintenance practice. Replacing the water temperature regulator reduces the chances for unscheduled downtime.

A water temperature regulator that fails in a partially opened position can cause overheating or overcooling of the engine.

A water temperature regulator that fails in the closed position can cause excessive overheating. Excessive overheating could result in cracking of the cylinder head or piston seizure problems.

A water temperature regulator that fails in the open position will cause the engine operating temperature to be too low during partial load operation. Low engine operating temperatures during partial loads could cause an excessive carbon buildup inside the cylinders. This excessive carbon buildup could result in an accelerated wear of the piston rings and wear of the cylinder liner.

NOTICE

Failure to replace your water temperature regulator on a regularly scheduled basis could cause severe engine damage.

Caterpillar engines incorporate a shunt design cooling system and require operating the engine with a water temperature regulator installed.

If the water temperature regulator is installed incorrectly, the engine may overheat, causing cylinder head damage. Ensure that the new water temperature regulator is installed in the original position. Ensure that the water temperature regulator vent hole is open.

Do not use liquid gasket material on the gasket or cylinder head surface.

Refer to Disassembly and Assembly, “Water Temperature Regulator - Remove and Install”. Consult your Caterpillar dealer for more information.

Note: If only the water temperature regulators are replaced, drain the coolant from the cooling system to a level that is below the water temperature regulator housing.

i00174798

Driven Equipment - Check

SMCS Code: 3279-535

S/N: C6F1-Up

S/N: C7H1-Up

S/N: C6J1-Up

S/N: C6L1-Up

S/N: G7L1-Up

S/N: C6M1-Up

S/N: C6N1-Up

S/N: C8W1-Up

S/N: C7Y1-Up

S/N: C8Y1-Up

Refer to the OEM specifications for more information on the following maintenance recommendations for the driven equipment:

- Inspection
- Adjustment
- Lubrication

- Other maintenance recommendations

Perform any maintenance for the driven equipment which is recommended by the OEM.

i01646701

Engine - Clean

SMCS Code: 1000-070

S/N: C6F1-Up

S/N: C7H1-Up

S/N: C6J1-Up

S/N: C6L1-Up

S/N: G7L1-Up

S/N: C6M1-Up

S/N: C6N1-Up

S/N: C8W1-Up

S/N: C7Y1-Up

S/N: C8Y1-Up

⚠ WARNING

Personal injury or death can result from high voltage.

Moisture can create paths of electrical conductivity.

Make sure that the electrical system is OFF. Lock out the starting controls and tag the controls "DO NOT OPERATE".

NOTICE

Accumulated grease and oil on an engine is a fire hazard. Keep the engine clean. Remove debris and fluid spills whenever a significant quantity accumulates on the engine.

Periodic cleaning of the engine is recommended. Steam cleaning the engine will remove accumulated oil and grease. A clean engine provides the following benefits:

- Easy detection of fluid leaks
- Maximum heat transfer characteristics
- Ease of maintenance

Note: Caution must be used in order to prevent electrical components from being damaged by excessive water when you clean the engine. Avoid electrical components such as the alternator, the starter, and the ECM.

i01553486

Engine Air Cleaner Element (Dual Element) - Clean/Replace

SMCS Code: 1054-037; 1054-510

S/N: C6F1-Up

S/N: C7H1-Up

S/N: C6J1-Up

S/N: C6L1-Up

S/N: G7L1-Up

S/N: C6M1-Up

S/N: C6N1-Up

S/N: C8W1-Up

S/N: C7Y1-Up

S/N: C8Y1-Up

NOTICE

Never run the engine without an air cleaner element installed. Never run the engine with a damaged air cleaner element. Do not use air cleaner elements with damaged pleats, gaskets or seals. Dirt entering the engine causes premature wear and damage to engine components. Air cleaner elements help to prevent airborne debris from entering the air inlet.

NOTICE

Never service the air cleaner element with the engine running since this will allow dirt to enter the engine.

Servicing the Air Cleaner Elements

If the air cleaner element becomes plugged, the air can split the material of the air cleaner element. Unfiltered air will drastically accelerate internal engine wear. Your Caterpillar dealer has the proper air cleaner elements for your application. Consult your Caterpillar dealer for the correct air cleaner element.

- Check the precleaner (if equipped) daily for accumulation of dirt and debris. Remove any dirt and debris, as needed.

- Operating conditions (dust, dirt and debris) may require more frequent service of the air cleaner element.
- The air cleaner element may be cleaned up to six times if the element is properly cleaned and inspected.
- The air cleaner element should be replaced at least one time per year. This replacement should be performed regardless of the number of cleanings.

Replace the dirty paper air cleaner elements with clean air cleaner elements. Before installation, the air cleaner elements should be thoroughly checked for tears and/or holes in the filter material. Inspect the gasket or the seal of the air cleaner element for damage. Maintain a supply of suitable air cleaner elements for replacement purposes.

Dual Element Air Cleaners

The dual element air cleaner contains a primary air cleaner element and a secondary air cleaner element. The primary air cleaner element can be used up to six times if the element is properly cleaned and inspected. The primary air cleaner element should be replaced at least one time per year. This replacement should be performed regardless of the number of cleanings.

The secondary air cleaner element is not serviceable or washable. The secondary air cleaner element should be removed and discarded for every three cleanings of the primary air cleaner element. When the engine is operating in environments that are dusty or dirty, air cleaner elements may require more frequent replacement.

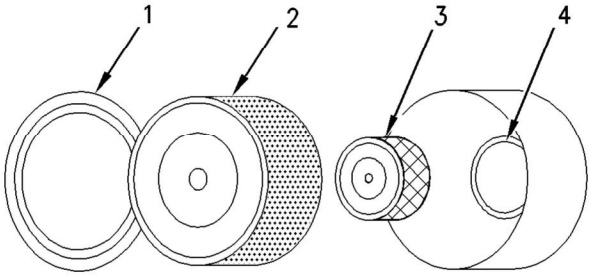

Illustration 42 g00736431

(1) Cover
(2) Primary air cleaner element
(3) Secondary air cleaner element
(4) Turbocharger air inlet

1. Remove the cover. Remove the primary air cleaner element.
2. The secondary air cleaner element should be removed and discarded for every three cleanings of the primary air cleaner element.

Note: Refer to “Cleaning the Primary Air Cleaner Elements”.

3. Cover the turbocharger air inlet with tape in order to keep dirt out.
4. Clean the inside of the air cleaner cover and body with a clean, dry cloth.
5. Remove the tape for the turbocharger air inlet. Install the secondary air cleaner element. Install a primary air cleaner element that is new or cleaned.
6. Install the air cleaner cover.
7. Reset the air cleaner service indicator.

Cleaning the Primary Air Cleaner Elements

NOTICE
Caterpillar recommends certified air filter cleaning services that are available at Caterpillar dealers. The Caterpillar cleaning process uses proven procedures to assure consistent quality and sufficient filter life.

Observe the following guidelines if you attempt to clean the filter element:

Do not tap or strike the filter element in order to remove dust.

Do not wash the filter element.

Use low pressure compressed air in order to remove the dust from the filter element. Air pressure must not exceed 207 kPa (30 psi). Direct the air flow up the pleats and down the pleats from the inside of the filter element. Take extreme care in order to avoid damage to the pleats.

Do not use air filters with damaged pleats, gaskets, or seals. Dirt entering the engine will cause damage to engine components.

The primary air cleaner element can be used up to six times if the element is properly cleaned and inspected. When the primary air cleaner element is cleaned, check for rips or tears in the filter material. The primary air cleaner element should be replaced at least one time per year. This replacement should be performed regardless of the number of cleanings.

Use clean primary air cleaner elements while dirty elements are being cleaned.

NOTICE
Do not clean the air cleaner elements by bumping or tapping. This could damage the seals. Do not use elements with damaged pleats, gaskets or seals. Damaged elements will allow dirt to pass through. Engine damage could result.

Visually inspect the primary air cleaner elements before cleaning. Inspect the air cleaner elements for damage to the seal, the gaskets, and the outer cover. Discard any damaged air cleaner elements.

There are two common methods that are used to clean primary air cleaner elements:

- Pressurized air
- Vacuum cleaning

Pressurized Air

Pressurized air can be used to clean primary air cleaner elements that have not been cleaned more than two times. Pressurized air will not remove deposits of carbon and oil. Use filtered, dry air with a maximum pressure of 207 kPa (30 psi).

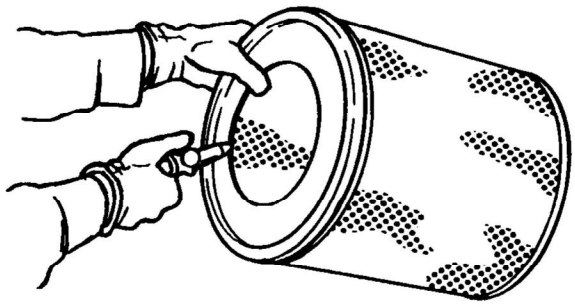

Illustration 43 g00281692

Note: When the primary air cleaner elements are cleaned, always begin with the clean side (inside) in order to force dirt particles toward the dirty side (outside).

Aim the hose so that the air flows inside the element along the length of the filter in order to help prevent damage to the paper pleats. Do not aim the stream of air directly at the primary air cleaner element. Dirt could be forced further into the pleats.

Note: Refer to “Inspecting the Primary Air Cleaner Elements”.

Vacuum Cleaning

Vacuum cleaning is a good method for cleaning primary air cleaner elements which require daily cleaning because of a dry, dusty environment. Cleaning with pressurized air is recommended prior to vacuum cleaning. Vacuum cleaning will not remove deposits of carbon and oil.

Note: Refer to “Inspecting the Primary Air Cleaner Elements”.

Inspecting the Primary Air Cleaner Elements



Illustration 44 g00281693

Inspect the clean, dry primary air cleaner element. Use a 60 watt blue light in a dark room or in a similar facility. Place the blue light in the primary air cleaner element. Rotate the primary air cleaner element. Inspect the primary air cleaner element for tears and/or holes. Inspect the primary air cleaner element for light that may show through the filter material. If it is necessary in order to confirm the result, compare the primary air cleaner element to a new primary air cleaner element that has the same part number.

Do not use a primary air cleaner element that has any tears and/or holes in the filter material. Do not use a primary air cleaner element with damaged pleats, gaskets or seals. Discard damaged primary air cleaner elements.

Storing Primary Air Cleaner Elements

If a primary air cleaner element that passes inspection will not be used, the primary air cleaner element can be stored for future use.

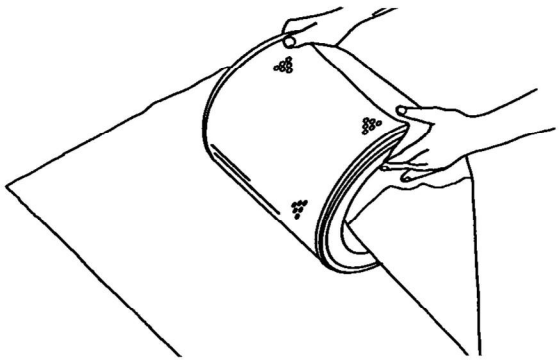

Illustration 45 g00281694

Do not use paint, a waterproof cover, or plastic as a protective covering for storage. An airflow restriction may result. To protect against dirt and damage, wrap the primary air cleaner elements in Volatile Corrosion Inhibited (VCI) paper.

Place the primary air cleaner element into a box for storage. For identification, mark the outside of the box and mark the primary air cleaner element. Include the following information:

- Date of cleaning
- Number of cleanings

Store the box in a dry location.

i01432811

Engine Air Cleaner Element (Single Element) - Inspect/Replace

SMCS Code: 1054-040; 1054-510

S/N: C6F1-Up

S/N: C7H1-Up

S/N: C6J1-Up

S/N: C6L1-Up

S/N: G7L1-Up

S/N: C6M1-Up

S/N: C6N1-Up

S/N: C8W1-Up

S/N: C7Y1-Up

S/N: C8Y1-Up

Perform the Operation and Maintenance Manual, “Engine Air Cleaner Service Indicator-Inspect” procedure and perform the Operation and Maintenance Manual, “Engine Air Precleaner Check/Clean” procedure (if equipped) before performing the following procedure.

NOTICE
Never run the engine without an air cleaner element installed. Never run the engine with a damaged air cleaner element. Do not use air cleaner elements with damaged pleats, gaskets or seals. Dirt entering the engine causes premature wear and damage to engine components. Air cleaner elements help to prevent air-borne debris from entering the air inlet.

NOTICE
Never service the air cleaner element with the engine running since this will allow dirt to enter the engine.

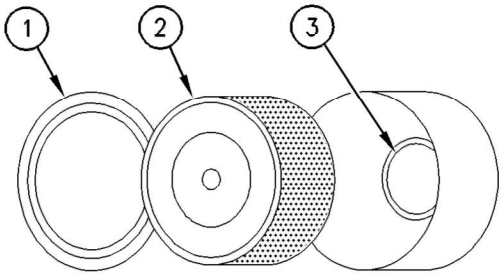

g00310664

Illustration 46

(1) Air cleaner cover
(2) Air filter element
(3) Air inlet

1. Remove air cleaner cover (1) and remove air filter element (2).
2. Cover air inlet (3) with tape or a clean cloth so that debris cannot enter the air inlet.
3. Clean the inside of air cleaner cover (1). Clean the body that holds the air cleaner element.
4. Inspect the replacement element for the following items:damage, dirt, and debris.
5. Remove the seal from the opening of the air inlet.
6. Install a clean, undamaged air filter element (2).
7. Install air cleaner cover (1).
8. Reset the air cleaner service indicator.

i01900118

Engine Air Cleaner Service Indicator - Inspect (If Equipped)

SMCS Code: 7452-040

S/N: C6F1-Up

S/N: C7H1-Up

S/N: C6J1-Up

S/N: C6L1-Up

S/N: G7L1-Up

S/N: C6M1-Up

S/N: C6N1-Up

S/N: C8W1-Up

S/N: C7Y1-Up

S/N: C8Y1-Up

Some engines may be equipped with a different service indicator.

Some engines are equipped with a differential gauge for inlet air pressure. The differential gauge for inlet air pressure displays the difference in the pressure that is measured before the air cleaner element and the pressure that is measured after the air cleaner element. As the air cleaner element becomes dirty, the pressure differential rises. If your engine is equipped with a different type of service indicator, follow the OEM recommendations in order to service the air cleaner service indicator.

The service indicator may be mounted on the air cleaner housing or in a remote location.

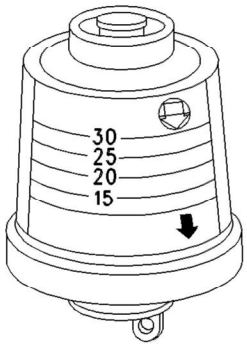

g00103777

Illustration 47

Typical service indicator

Observe the service indicator. The air cleaner element should be cleaned or the air cleaner element should be replaced when one of the following conditions occur:

- The yellow diaphragm enters the red zone.
- The red piston locks in the visible position.

Test the Service Indicator

Service indicators are important instruments.

- Check for ease of resetting. The service indicator should reset in less than three pushes.
- Check the movement of the yellow core when the engine is accelerated to the engine rated speed. The yellow core should latch approximately at the greatest vacuum that is attained.

If the service indicator does not reset easily, or if the yellow core does not latch at the greatest vacuum, the service indicator should be replaced. If the new service indicator will not reset, the hole for the service indicator may be plugged.

The service indicator may need to be replaced frequently in environments that are severely dusty, if necessary. Replace the service indicator annually regardless of the operating conditions. Replace the service indicator when the engine is overhauled, and whenever major engine components are replaced.

Note: When a new service indicator is installed, excessive force may crack the top of the service indicator. Tighten the service indicator to a torque of 2 N·m (18 lb in).

i02927289

Engine Air Precleaner - Check/Clean

SMCS Code: 1055-070; 1055-535

S/N: C6F1-Up

S/N: C7H1-Up

S/N: C6J1-Up

S/N: C6L1-Up

S/N: G7L1-Up

S/N: C6M1-Up

S/N: C6N1-Up

S/N: C8W1-Up

S/N: C7Y1-Up

S/N: C8Y1-Up

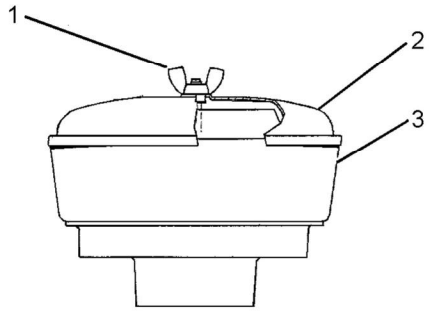

g01453058

Illustration 48

Typical engine air precleaner

(1) Wing nut
(2) Cover
(3) Body

Remove wing nut (1) and cover (2). Check for an accumulation of dirt and debris in body (3). Clean the body, if necessary.

After cleaning the precleaner, install cover (2) and wing nut (1).

Note: When the engine is operated in dusty applications, more frequent cleaning is required.

i02657607

Engine Crankcase Breather - Replace

SMCS Code: 1317-510

S/N: C6F1-Up

S/N: C7H1-Up

S/N: C6J1-Up

S/N: C6L1-Up

S/N: G7L1-Up

S/N: C6M1-Up

S/N: C6N1-Up

S/N: C8W1-Up

S/N: C7Y1-Up

S/N: C8Y1-Up

NOTICE
Keep all parts clean from contaminants.

Contaminants may cause rapid wear and shortened component life.

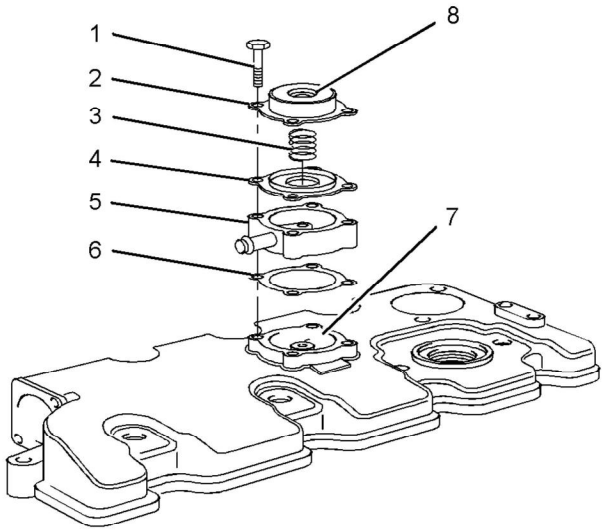

g01335247

Illustration 49

Typical example

(1) Screws for the breather cover
(2) Breather cover
(3) Spring
(4) Diaphragm and plate
(5) Spacer for turbocharged engines only
(6) Joint for turbocharged engines only
(7) Cavity
(8) Vent hole

1. Loosen the screws (1) and remove the breather cover (2) from the valve mechanism cover.

2. Remove the spring (3). Remove the diaphragm and plate (4).

3. For turbocharged engines, remove the spacer (5) and the joint (6).

4. Clean the vent hole (8) and the cavity (7) in the valve mechanism cover.

NOTICE
Make sure that the components of the breather assembly are installed correctly. Engine damage may occur if the breather assembly is not working correctly.

5. For turbocharged engines, install a new joint (6) and the spacer (5).

6. Install a new diaphragm and plate (4) for the breather assembly into the cavity (7) of the valve mechanism cover or the spacer (5) for turbocharged engines.

7. Install a new spring (3).

8. Install the breather cover (2) and the four screws (1). Tighten the screws.

i02456872

Engine Mounts - Inspect

SMCS Code: 1152-040

S/N: C6F1-Up

S/N: C7H1-Up

S/N: C6J1-Up

S/N: C6L1-Up

S/N: G7L1-Up

S/N: C6M1-Up

S/N: C6N1-Up

S/N: C8W1-Up

S/N: C7Y1-Up

S/N: C8Y1-Up

Inspect the engine mounts for deterioration and for proper bolt torque. Engine vibration can be caused by the following conditions:

- Improper mounting of the engine
- Deterioration of the engine mounts

Any engine mount that shows deterioration should be replaced. Refer to Special Publication, SENR3130, “Torque Specifications” for the recommended torques. Refer to the OEM recommendations for more information.

i00623423

Engine Oil Level - Check

SMCS Code: 1348-535-FLV

S/N: C6F1-Up

S/N: C7H1-Up

S/N: C6J1-Up

S/N: C6L1-Up

S/N: G7L1-Up

S/N: C6M1-Up

S/N: C6N1-Up

S/N: C8W1-Up

S/N: C7Y1-Up

S/N: C8Y1-Up

⚠ WARNING

Hot oil and hot components can cause personal injury. Do not allow hot oil or hot components to contact the skin.

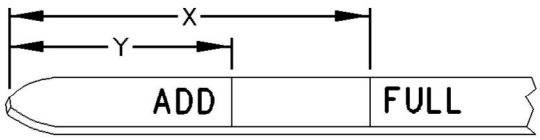

g00110310

Illustration 50

(Y) “ADD” mark. (X) “FULL” mark.

NOTICE
Perform this maintenance with the engine stopped.

1. Maintain the oil level between “ADD” mark (Y) and “FULL” mark (X) on oil level gauge (1). Do not fill the crankcase above “FULL” mark (X).

NOTICE
Operating your engine when the oil level is above the “FULL” mark could cause your crankshaft to dip into the oil. The air bubbles created from the crankshaft dipping into the oil reduces the oil's lubricating characteristics and could result in the loss of power.

2. Remove the oil filler cap and add oil, if necessary. Clean the oil filler cap. Install the oil filler cap.

i03542996

Engine Oil Sample - Obtain

SMCS Code: 1000-008; 1348-554-SM; 7542-554-OC, SM

S/N: C6F1-Up

S/N: C7H1-Up

S/N: C6J1-Up

S/N: C6L1-Up

S/N: G7L1-Up

S/N: C6M1-Up

S/N: C6N1-Up

S/N: C8W1-Up

S/N: C7Y1-Up

S/N: C8Y1-Up

In addition to a good preventive maintenance program, Caterpillar recommends using S·O·S oil analysis at regularly scheduled intervals in order to monitor the condition of the engine and the maintenance requirements of the engine. S·O·S oil analysis provides infrared analysis, which is required for determining nitration and oxidation levels.

Obtain the Sample and the Analysis

⚠ WARNING

Hot oil and hot components can cause personal injury. Do not allow hot oil or hot components to contact the skin.

Before you take the oil sample, complete the Label, PEEP5031 for identification of the sample. In order to help obtain the most accurate analysis, provide the following information:

- Engine model
- Service hours on the engine
- The number of hours that have accumulated since the last oil change
- The amount of oil that has been added since the last oil change

To ensure that the sample is representative of the oil in the crankcase, obtain a warm, well mixed oil sample.

To avoid contamination of the oil samples, the tools and the supplies that are used for obtaining oil samples must be clean.

Caterpillar recommends using the sampling valve in order to obtain oil samples. The quality and the consistency of the samples are better when the sampling valve is used. The location of the sampling valve allows oil that is flowing under pressure to be obtained during normal engine operation.

The 169-8373 Fluid Sampling Bottle is recommended for use with the sampling valve. The fluid sampling bottle includes the parts that are needed for obtaining oil samples. Instructions are also provided.

NOTICE

Always use a designated pump for oil sampling, and use a separate designated pump for coolant sampling. Using the same pump for both types of samples may contaminate the samples that are being drawn. This contaminate may cause a false analysis and an incorrect interpretation that could lead to concerns by both dealers and customers.

If the engine is not equipped with a sampling valve, use the 1U-5718 Vacuum Pump. The pump is designed to accept sampling bottles. Disposable tubing must be attached to the pump for insertion into the sump.

For instructions, see Special Publication, PEgj0047, “How To Take A Good S·O·S Oil Sample”. Consult your Caterpillar dealer for complete information and assistance in establishing an S·O·S program for your engine.

i02625985

Engine Oil and Filter - Change

SMCS Code: 1318-510; 1348-044

S/N: C6F1-Up

S/N: C7H1-Up

S/N: C6J1-Up

S/N: C6L1-Up

S/N: G7L1-Up

S/N: C6M1-Up

S/N: C6N1-Up

S/N: C8W1-Up

S/N: C7Y1-Up

S/N: C8Y1-Up

⚠ WARNING

Hot oil and hot components can cause personal injury. Do not allow hot oil or hot components to contact the skin.

NOTICE
Care must be taken to ensure that fluids are contained during performance of inspection, maintenance, testing, adjusting and repair of the product. Be prepared to collect the fluid with suitable containers before opening any compartment or disassembling any component containing fluids.

Dispose of all fluids according to local regulations and mandates.

NOTICE
Keep all parts clean from contaminants.

Contaminants may cause rapid wear and shortened component life.

Do not drain the oil when the engine is cold. As the oil cools, suspended waste particles settle on the bottom of the oil pan. The waste particles are not removed with the draining cold oil. Drain the crankcase with the engine stopped. Drain the crankcase with the oil warm. This draining method allows the waste particles that are suspended in the oil to be drained correctly.

Failure to follow this recommended procedure will cause the waste particles to be recirculated through the engine lubrication system with the new oil.

Drain the Engine Oil

After the engine has been run at the normal operating temperature, stop the engine. Use one of the following methods to drain the engine crankcase oil:

- If the engine is equipped with a drain valve, turn the drain valve knob counterclockwise in order to drain the oil. After the oil has drained, turn the drain valve knob clockwise in order to close the drain valve.
- If the engine is not equipped with a drain valve, remove the oil drain plug in order to allow the oil to drain. After the oil has drained, the oil drain plug should be cleaned and installed.

Replace the Oil Filter

NOTICE
Caterpillar oil filters are built to Caterpillar specifications. Use of an oil filter not recommended by Caterpillar could result in severe engine damage to the engine bearings, crankshaft, etc., as a result of the larger waste particles from unfiltered oil entering the engine lubricating system. Only use oil filters recommended by Caterpillar.

1. Remove the oil filter with a 1U-8760 Chain Wrench.

Note: The following actions can be carried out as part of the preventive maintenance program.

2. Cut the oil filter open with a 175-7546 Oil Filter Cutter Gp. Break apart the pleats and inspect the oil filter for metal debris. An excessive amount of metal debris in the oil filter may indicate early wear or a pending failure.

   Use a magnet to differentiate between the ferrous metals and the nonferrous metals that are found in the oil filter element. Ferrous metals may indicate wear on the steel and cast iron parts of the engine.

   Nonferrous metals may indicate wear on the aluminum parts, brass parts or bronze parts of the engine. Parts that may be affected include the following items: main bearings, rod bearings, turbocharger bearings, and cylinder heads.

   Due to normal wear and friction, it is not uncommon to find small amounts of debris in the oil filter. Consult your Caterpillar dealer in order to arrange for a further analysis if an excessive amount of debris is found in the oil filter.

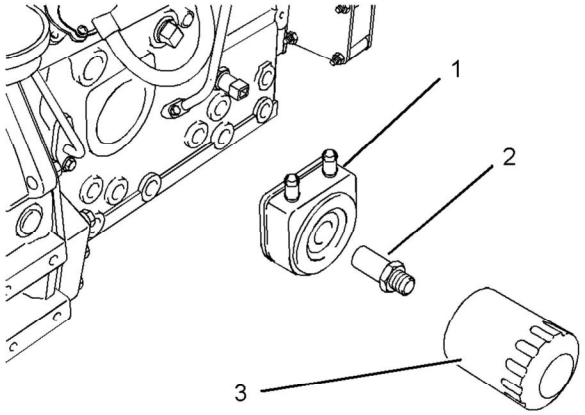

Illustration 51 g01334593

(1) Oil cooler
(2) Adapter
(3) Oil filter

Note: Oil cooler (1) and adapter (2) are not installed on all engines.

3. Clean the sealing surface of the cylinder block or the oil cooler (1).

4. Apply clean engine oil to the new oil filter seal (3).

NOTICE
Do not fill the oil filters with oil before installing them. This oil would not be filtered and could be contaminated. Contaminated oil can cause accelerated wear to engine components.

5. Install the oil filter. Tighten the oil filter until the oil filter seal contacts the cylinder block or the oil cooler. Tighten the oil filter by hand according to the instructions that are shown on the oil filter. Do not overtighten the oil filter.

Fill the Engine Crankcase

1. Remove the oil filler cap. Refer to this Operation and Maintenance Manual , “Refill Capacities and Recommendations” for more information on lubricant specifications. Fill the crankcase with the correct amount of oil. Refer to this Operation and Maintenance Manual , “Refill Capacities” for more information on refill capacities.

NOTICE
If equipped with an auxiliary oil filter system or a remote oil filter system, follow the OEM or filter manufacturer's recommendations. Under filling or overfilling the crankcase with oil can cause engine damage.

NOTICE
To prevent crankshaft bearing damage, crank the engine with the fuel OFF. This will fill the oil filters before starting the engine. Do not crank the engine for more than 30 seconds.

2. Start the engine and run the engine at “LOW IDLE” for two minutes. Perform this procedure in order to ensure that the lubrication system has oil and that the oil filters are filled. Inspect the oil filter for oil leaks.

3. Stop the engine and allow the oil to drain back to the sump for a minimum of ten minutes.

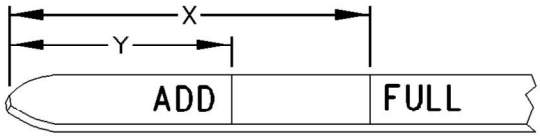

Illustration 52 g00110310

4. Remove the oil level gauge in order to check the oil level. Maintain the oil level between the “ADD” and “FULL” marks on the oil level gauge.

i00626013

Engine Protective Devices - Check

SMCS Code: 7400-535

S/N: C6F1-Up

S/N: C7H1-Up

S/N: C6J1-Up

S/N: C6L1-Up

S/N: G7L1-Up

S/N: C6M1-Up

S/N: C6N1-Up

S/N: C8W1-Up

S/N: C7Y1-Up

S/N: C8Y1-Up

Alarms and shutoffs must function properly. Alarms provide timely warning to the operator. Shutoffs help to prevent damage to the engine. It is impossible to determine if the engine protective devices are in good working order during normal operation. Malfunctions must be simulated in order to test the engine protective devices.

A calibration check of the engine protective devices will ensure that the alarms and shutoffs activate at the setpoints. Ensure that the engine protective devices are functioning properly.

NOTICE
During testing, abnormal operating conditions must be simulated.

The tests must be performed correctly in order to prevent possible damage to the engine.

To prevent damage to the engine, only authorized service personnel or your Caterpillar dealer should perform the tests.

Visual Inspection

Visually check the condition of all gauges, sensors and wiring. Look for wiring and components that are loose, broken, or damaged. Damaged wiring or components should be repaired or replaced immediately.

i02676796

Engine Valve Lash - Inspect/Adjust

SMCS Code: 1102-025

S/N: C6F1-Up

S/N: C7H1-Up

S/N: C6J1-Up

S/N: C6L1-Up

S/N: G7L1-Up

S/N: C6M1-Up

S/N: C6N1-Up

S/N: C8W1-Up

S/N: C7Y1-Up

S/N: C8Y1-Up

This maintenance is recommended by Caterpillar as part of a lubrication and preventive maintenance schedule in order to help provide maximum engine life. The maintenance for the valve lash is important in order to keep the engine compliant.

This maintenance is recommended by Caterpillar as part of a lubrication and preventive maintenance schedule in order to help provide maximum engine life.

NOTICE
Only qualified service personnel should perform this maintenance. Refer to the Systems Operation/Testing and Adjusting Manual, “Valve Lash and Valve Bridge Adjustment”article or consult your Caterpillar dealer for the complete valve lash adjustment procedure.

Operation of Caterpillar engines with improper valve adjustments can reduce engine efficiency. This reduced efficiency could result in excessive fuel usage and/or shortened engine component life.

⚠ WARNING

Ensure that the engine can not be started while this maintenance is being performed. To help prevent possible injury, do not use the starting motor to turn the flywheel.

Hot engine components can cause burns. Allow additional time for the engine to cool before measuring/adjusting valve lash clearance.

Ensure that the engine is stopped before measuring the valve lash. To obtain an accurate measurement, allow the valves to cool before this maintenance is performed.

Refer to the Service Manual for more information.

i02625315

Fuel Injector - Test/Change

SMCS Code: 1290-081; 1290-510

S/N: C6F1-Up

S/N: C7H1-Up

S/N: C6J1-Up

S/N: C6L1-Up

S/N: G7L1-Up

S/N: C6M1-Up

S/N: C6N1-Up

S/N: C8W1-Up

S/N: C7Y1-Up

S/N: C8Y1-Up

⚠ WARNING

Fuel leaked or spilled onto hot surfaces or electrical components can cause a fire.

NOTICE
Do not allow dirt to enter the fuel system. Thoroughly clean the area around a fuel system component that will be disconnected. Fit a suitable cover over disconnected fuel system component.

Fuel injectors are subject to tip wear. Tip wear is a result of fuel contamination. Tip wear can cause the following problems:

- Increased fuel consumption
- Black smoke
- Misfire
- Rough running

Fuel injectors should be cleaned, inspected, tested, and replaced, if necessary. Refer to Special Instruction, SEHS7292 for using the 8S-2245 Injector Cleaning Tool Gp. Consult your Caterpillar dealer about cleaning the fuel injectors and testing the fuel injectors.

NOTICE
Never wire brush or scrape a fuel injection nozzle. Wire brushing or scraping a fuel injection nozzle will damage the finely machine orifice. Proper tools for cleaning and testing the fuel injection nozzles can be obtained from Caterpillar dealers.

The following items are symptoms of a malfunction of the fuel injectors:

- Abnormal engine operation
- Smoke emission
- Engine knock

Each fuel injector must be isolated one at a time in order to determine the malfunctioning fuel injector.

1. Start the engine.
2. Loosen each fuel line nut one at a time at the fuel injection pump. A cloth or similar material must be used in order to prevent fuel from spraying on the hot exhaust components. Tighten each nut before loosening the next nut.
3. A faulty fuel injector may be identified when a fuel line nut is loosened and the following conditions are present:
   - The exhaust smoke is partially eliminated or the exhaust smoke is completely eliminated.
   - Engine performance is not affected.

   A fuel injector that is suspected of being faulty should be removed. A new fuel injector should be installed in the cylinder in order to determine if the removed fuel injector is faulty.

Removal and Installation of the Fuel Injection Nozzles

For the removal and the installation of fuel injectors, special tooling is required. Refer to the Service Manual for more information. Consult your Caterpillar dealer for assistance.

i02596360

Fuel System - Prime

SMCS Code: 1258-548

S/N: C6F1-Up

S/N: C7H1-Up

S/N: C6J1-Up

S/N: C6L1-Up

S/N: G7L1-Up

S/N: C6M1-Up

S/N: C6N1-Up

S/N: C8W1-Up

S/N: C7Y1-Up

S/N: C8Y1-Up

NOTICE
Care must be taken to ensure that fluids are contained during performance of inspection, maintenance, testing, adjusting, and repair of the product. Be prepared to collect the fluid with suitable containers before opening any compartment or disassembling any component containing fluids.

Dispose of all fluids according to local regulations and mandates.

Use the following procedure in order to prime the fuel system:

If air enters the fuel system, the air must be purged from the fuel system before the engine can be started. Air can enter the fuel system when the following events occur:

- The fuel tank is empty or the fuel tank has been partially drained.
- The low pressure fuel lines are disconnected.
- A leak exists in the low pressure fuel system.
- The fuel filter is replaced.

NOTICE
Care must be taken to ensure that fluids are contained during performance of inspection, maintenance, testing, adjusting, and repair of the product. Be prepared to collect the fluid with suitable containers before opening any compartment or disassembling any component containing fluids.

Dispose of all fluids according to local regulations and mandates.

Primary filter

Ensure that the air is removed from the primary filter before you prime the fuel filters. Refer to illustration 53.

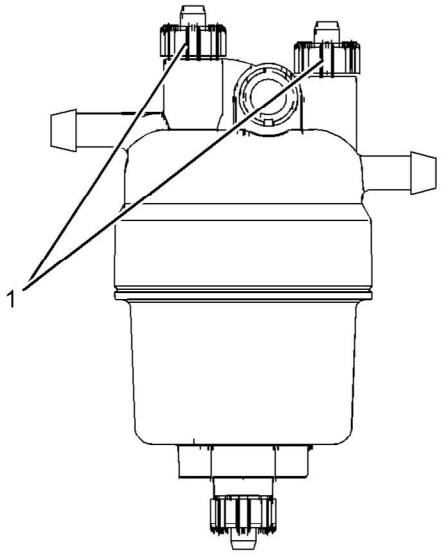

Illustration 53 g01316878

This filter may not be installed on the engine.

(1) Vent screws

Fuel filters

There are three types of fuel filter that may be installed on the engine.

- Element
- Canister
- Spin-on filter with fuel priming pump

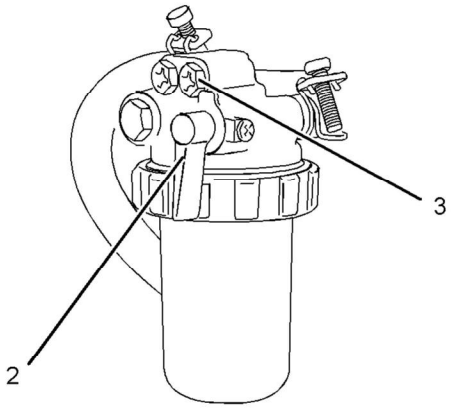

g01327360

Illustration 54

Element

(2) Fuel valve
(3) Vent screw

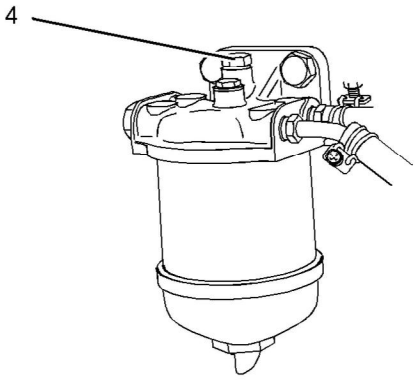

g01327361

Illustration 55

Canister

(4) Vent screw

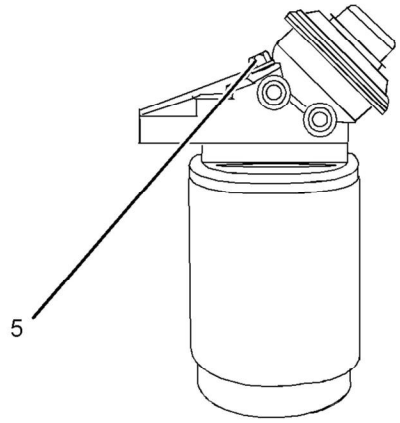

g01327363

Illustration 56

Spin-on filter with fuel priming pump

(5) Vent screw

Vent screw (3) is installed on the filter that has an element. Vent screw (4) is installed on the fuel filter that has a canister. Vent screw (5) is installed on the spin-on filter.

Priming the system

Ensure that the air is removed from the primary filter. Loosen vent screws (1). Refer to illustration 53. Operate the priming pump. When fuel free from air flows from the vent screw tighten the vent screw.

Note: Some fuel system will use gravity in order to prime the primary fuel filter. If gravity is used ensure that the fuel tank is full and that all stop valves in the fuel line are open.

There is four different types of systems that can be installed on the engine in order to prime the fuel system. Refer to illustration 57.

- Hand priming pump
- In-line hand priming pump
- Electrical priming pump
- Transfer pump that is operated by the starting motor

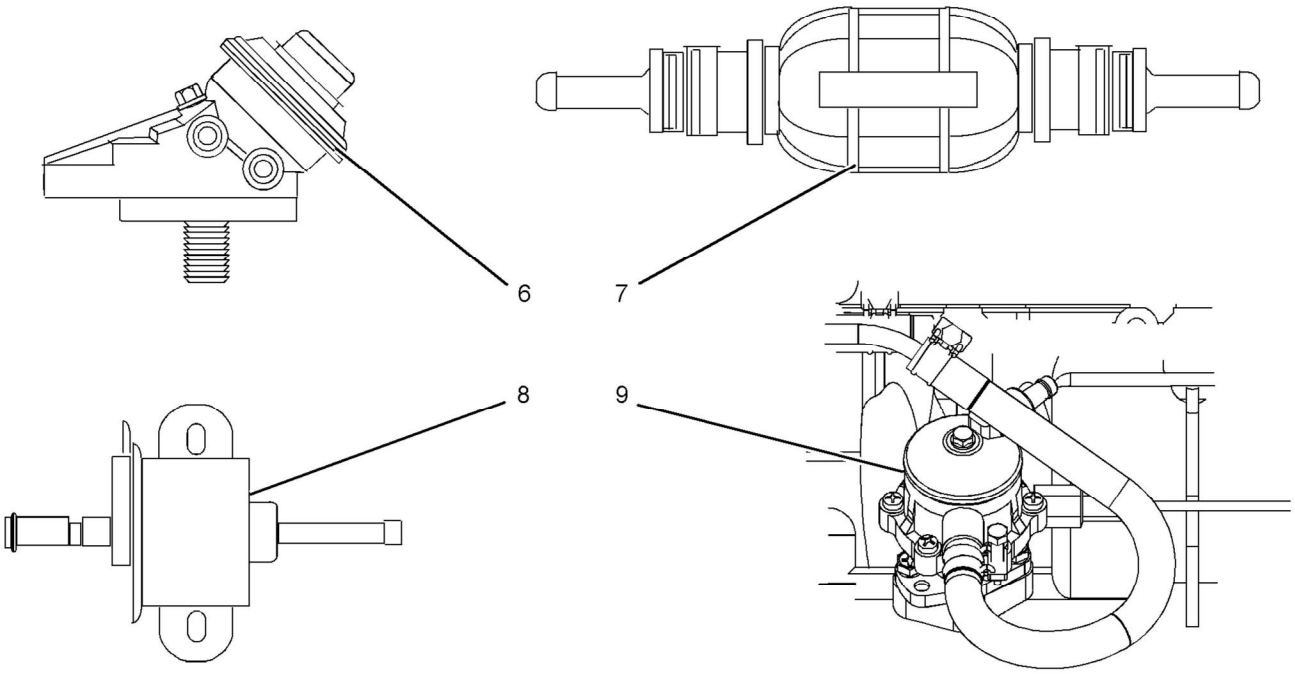

Illustration 57 g01301853

(6) Hand priming pump
(7) In-line priming pump
(8) Electrical priming pump
(9) Fuel transfer pump

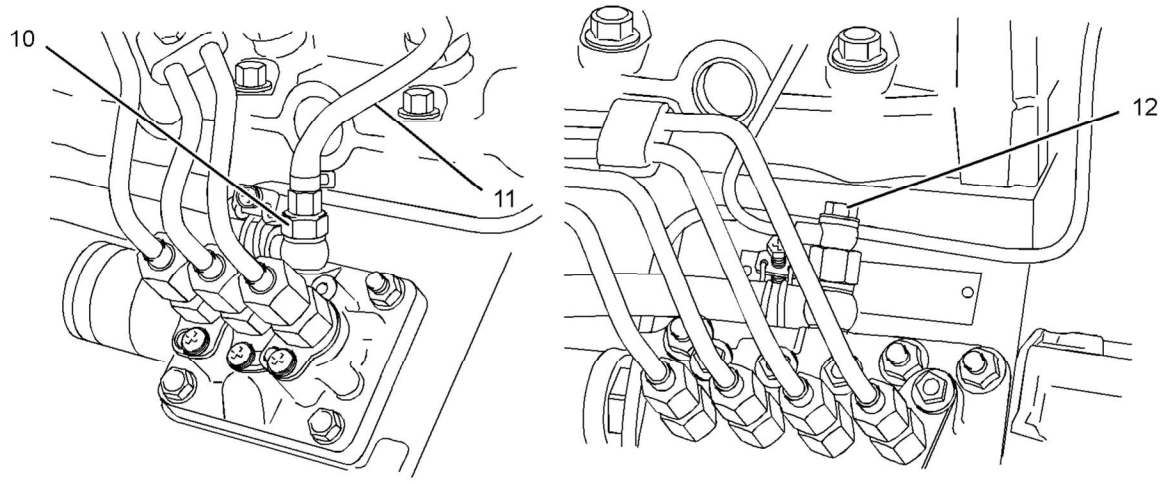

Illustration 58 g01304597

(10) Connector bolt
(11) Fuel return line
(12) Connector bolt

Hand Priming Pump 6

In order to identify the hand priming pump, refer to illustration 57.

1. Ensure that fuel valve (2) for the fuel filter that has an element is in the ON position. Refer to illustration 54.
2. Loosen vent screw (3 4 or 5) on the fuel filter.

3. Operate hand priming pump (6). When fuel free from air flows from the vent screw tighten the vent screw.

4. Loosen connection (10 or 12) at the fuel injection pump. Refer to illustration 58.

Note: Fuel return line (11) may need to be removed in order to prime the fuel system.

5. Operate the hand priming pump. When fuel free from air flows from the connections tighten the connecting bolt.

6. The engine should now be able to start. Operate the starting motor in order to start the engine.

Note: Do not operate the starting motor for more than 15 seconds. If the engine does not start after 15 seconds, stop and wait for 30 seconds before trying again.

In-line Priming Pump 7

In order to identify the in-line priming pump, refer to illustration 57.

1. Ensure that fuel valve (2) for the fuel filter that has an element is in the ON position. Refer to illustration 54.

2. Loosen vent screw (3 4 or 5) on the fuel filter.

3. Operate in-line priming pump (7). When fuel free from air flows from the vent screw tighten the vent screw.

4. Loosen connection (10 or 12) at the fuel injection pump. Refer to illustration 58.

Note: Fuel return line (11) may need to be removed in order to prime the fuel system.

5. Operate the in-line priming pump. When fuel free from air flows from the connections tighten the connecting bolt.

6. The engine should now be able to start. Operate the starting motor in order to start the engine.

Note: Do not operate the starting motor for more than 15 seconds. If the engine does not start after 15 seconds, stop and wait for 30 seconds before trying again.

Electrical Priming Pump 8

In order to identify the electrical priming pump, refer to illustration 57.

1. Ensure that fuel valve (2) for the fuel filter that has an element is in the ON position. Refer to illustration 54.

2. Loosen vent screw (3 4 or 5) on the fuel filter.

3. Operate electrical priming pump (8). When fuel free from air flows from the vent screw tighten the vent screw. Switch off the electrical priming pump.

4. Loosen connection (10 or 12) at the fuel injection pump. Refer to illustration 58.

Note: Fuel return line (11) may need to be removed in order to prime the fuel system.

5. Operate the in-line priming pump. When fuel free from air flows from the connections tighten the connecting bolt.

6. The engine should now be able to start. Operate the starting motor in order to start the engine.

Note: Do not operate the starting motor for more than 15 seconds. If the engine does not start after 15 seconds, stop and wait for 30 seconds before trying again.

Fuel Transfer Pump 9

In order to identify the fuel transfer pump, refer to illustration 57.

Note: In order to use the transfer pump, you must operate the starting motor. Do not operate the starting motor for more than 15 seconds. After 15 seconds, stop and wait for 30 seconds before operating the starting motor.

1. Ensure that fuel valve (2) for the fuel filter that has an element is in the ON position. Refer to illustration 54.

2. Loosen vent screw (3 4 or 5) on the fuel filter.

3. Operate fuel transfer pump (9). When fuel free from air flows from the vent screw tighten the vent screw. Stop the fuel transfer pump.

4. Loosen connection (10 or 12) at the fuel injection pump. Refer to illustration 58.

Note: Fuel return line (11) may need to be removed in order to prime the fuel system.

5. Operate the fuel transfer pump. When fuel free from air flows from the connections tighten the connecting bolt. Stop the transfer pump.

6. The engine should now be able to start. Operate the starting motor in order to start the engine.

Note: Do not operate the starting motor for more than 15 seconds. If the engine does not start after 15 seconds, stop and wait for 30 seconds before trying again.

i02627223

Fuel System Primary Filter/Water Separator - Drain

SMCS Code: 1260-543; 1263-543

S/N: C6F1-Up

S/N: C7H1-Up

S/N: C6J1-Up

S/N: C6L1-Up

S/N: G7L1-Up

S/N: C6M1-Up

S/N: C6N1-Up

S/N: C8W1-Up

S/N: C7Y1-Up

S/N: C8Y1-Up

⚠ WARNING

Fuel leaked or spilled onto hot surfaces or electrical components can cause a fire. To help prevent possible injury, turn the start switch off when changing fuel filters or water separator elements. Clean up fuel spills immediately.

NOTICE

The water separator is not a filter. The water separator separates water from the fuel. The engine should never be allowed to run with the water separator more than half full. Engine damage may result.

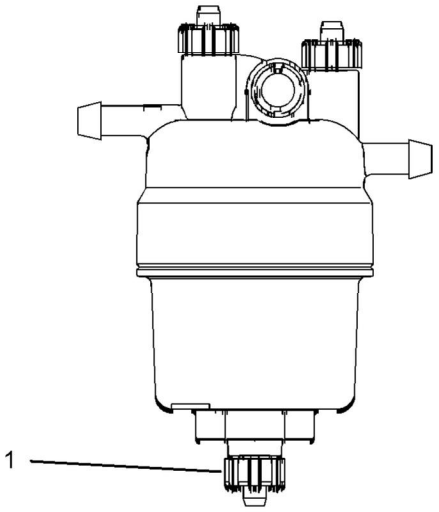

Illustration 59 g01316965

Typical example

1. Open drain (1). Catch the draining fluid in a suitable container. Dispose of the drained fluid correctly.
2. Close drain (1).

NOTICE

The water separator is under suction during normal engine operation. Ensure that the drain valve is tightened securely to help prevent air from entering the fuel system.

i02627769

Fuel System Secondary Filter - Replace

SMCS Code: 1261-510-SE

S/N: C6F1-Up

S/N: C7H1-Up

S/N: C6J1-Up

S/N: C6L1-Up

S/N: G7L1-Up

S/N: C6M1-Up

S/N: C6N1-Up

S/N: C8W1-Up

S/N: C7Y1-Up

S/N: C8Y1-Up

⚠ WARNING

Fuel leaked or spilled onto hot surfaces or electrical components can cause a fire. To help prevent possible injury, turn the start switch off when changing fuel filters or water separator elements. Clean up fuel spills immediately.

NOTICE

Do not allow dirt to enter the fuel system. Thoroughly clean the area around a fuel system component that will be disconnected. Fit a suitable cover over disconnected fuel system component.

NOTICE

Care must be taken to ensure that fluids are contained during performance of inspection, maintenance, testing, adjusting, and repair of the product. Be prepared to collect the fluid with suitable containers before opening any compartment or disassembling any component containing fluids.

Dispose of all fluids according to local regulations and mandates.

Fuel Filter with Canister

1. Close the fuel supply valve.

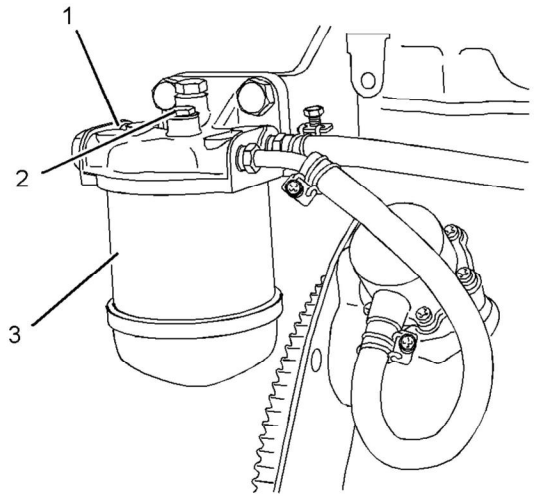

Illustration 60 g01307792

Typical example

2. Clean the outside of the fuel filter assembly (1).
3. Remove setscrew (2).
4. Remove the canister (3). Ensure that any fluid is drained into a suitable container.

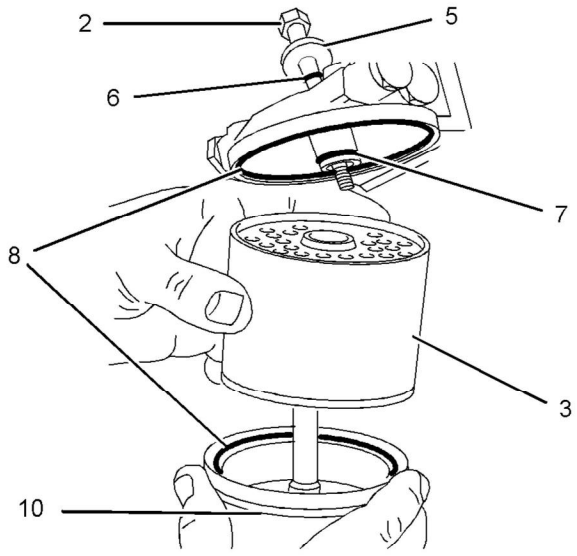

Illustration 61 g01334877

Typical example

5. Assemble the following items: seals (8), seal (7), canister (3), and bowl (10). Place washer (5) and seal (6) on setscrew (2).
6. Fasten the assembly to the fuel filter base with setscrew (2).

The fuel system will need to be primed after the new filter is installed. Refer to this Operation and Maintenance Manual, “Fuel System - Prime”.

Fuel Filter with Element

1. Close the fuel supply valve (1).

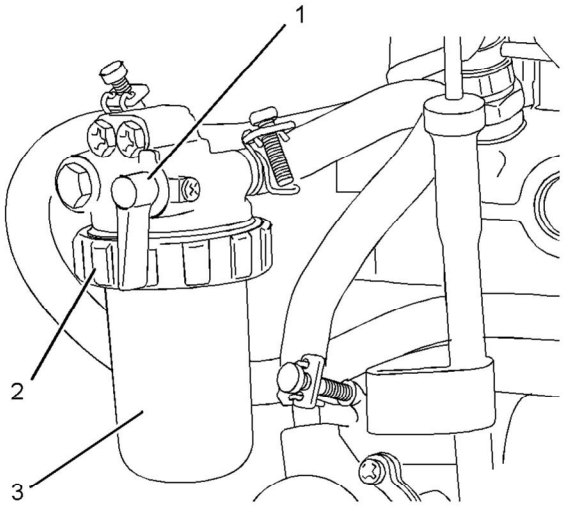

Illustration 62 g01334893

Typical example

2. Clean the outside of the fuel filter assembly.

3. Loosen locking ring (2).

4. Remove the casing for the filter (3) and the element. Ensure that any fluid is drained into a suitable container.

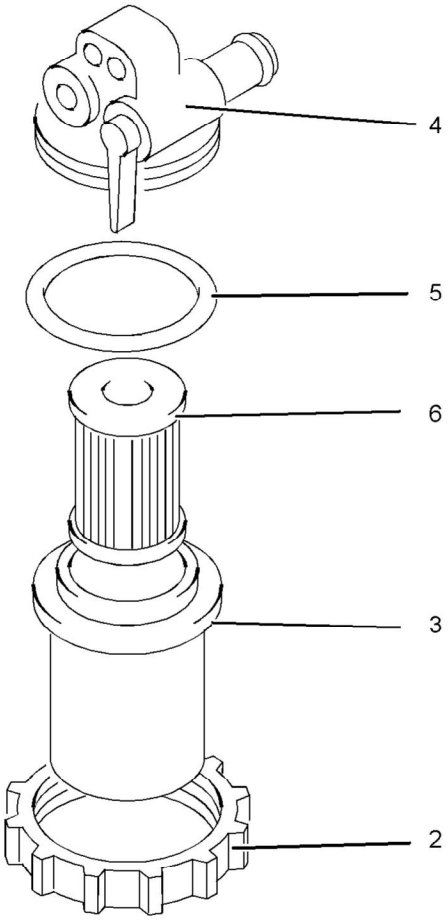

Illustration 63 g01334895

Typical example

5. Assemble the following items: seal (5), filter element (6) and casing (3).

Note: Do not fill the fuel filter with fuel. This fuel will not be filtered and the fuel could be contaminated. Contaminated fuel can damage the fuel system.

6. Install the assembled items to the filter base (4).

7. Install the locking ring (2) to the filter base. Rotate the locking ring in order to lock the assembly.

The fuel system will need to be primed after the new filter is installed. Refer to this Operation and Maintenance Manual, “Fuel System - Prime”.

Fuel filter with priming pump

1. Close the fuel supply valve.

2. Clean the outside of the fuel filter assembly.

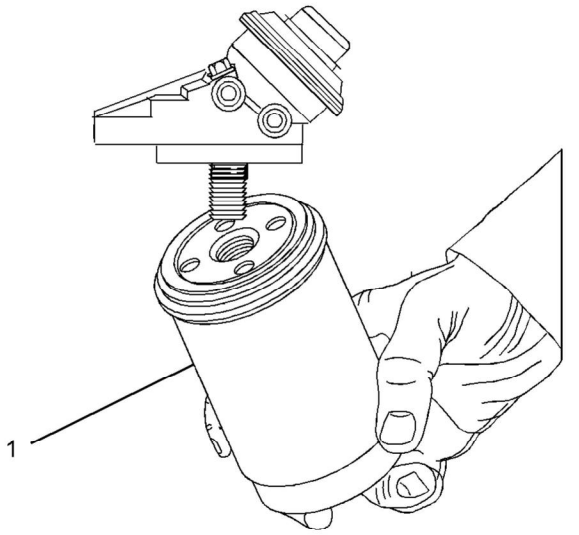

Illustration 64 g01306131

Typical example

3. Remove spin-on filter (1). Use a 1U-8760 Chain Wrench in order to remove the filter. Ensure that any fluid is drained into a suitable container.

Note: Do not fill the fuel filter with fuel. This fuel will not be filtered and the fuel could be contaminated. Contaminated fuel can damage the fuel system.

4. Install the new spin-on filter. Tighten the spin-on filter by hand.

The fuel system will need to be primed after the new filter is installed. Refer to this Operation and Maintenance Manual, “Fuel System - Prime”.

i03645042

Fuel Tank Water and Sediment - Drain

SMCS Code: 1273-543-M&S

S/N: C6F1-Up

S/N: C7H1-Up

S/N: C6J1-Up

S/N: C6L1-Up

S/N: G7L1-Up

S/N: C6M1-Up

S/N: C6N1-Up

S/N: C8W1-Up

S/N: C7Y1-Up

S/N: C8Y1-Up

NOTICE

Care must be taken to ensure that fluids are contained during performance of inspection, maintenance, testing, adjusting and repair of the product. Be prepared to collect the fluid with suitable containers before opening any compartment or disassembling any component containing fluids.

Refer to Special Publication, NENG2500, “Caterpillar Dealer Service Tool Catalog” or refer to Special Publication, PECJ0003, “Caterpillar Shop Supplies and Tools Catalog” for tools and supplies suitable to collect and contain fluids on Caterpillar products.

Dispose of all fluids according to local regulations and mandates.

Fuel Tank

Fuel quality is critical to the performance and to the service life of the engine. Water in the fuel can cause excessive wear to the fuel system. Condensation occurs during the heating and cooling of fuel. The condensation occurs as the fuel passes through the fuel system and the fuel returns to the fuel tank. This causes water to accumulate in fuel tanks. Draining the fuel tank regularly and obtaining fuel from reliable sources can help to eliminate water in the fuel.

Drain the Water and the Sediment

Fuel tanks should contain some provision for draining water and draining sediment from the bottom of the fuel tanks.

Open the drain valve on the bottom of the fuel tank in order to drain the water and the sediment. Close the drain valve.

Note: Failure to properly close the drain can allow air into the system, which could have detrimental results to performance.

Check the fuel daily. Drain the water and sediment from the fuel tank after operating the engine or drain the water and sediment from the fuel tank after the fuel tank has been filled. Allow five to ten minutes before performing this procedure.

Fill the fuel tank after operating the engine in order to drive out moist air. This will help prevent condensation. Do not fill the tank to the top. The fuel expands as the fuel gets warm. The tank may overflow.

Some fuel tanks use supply pipes that allow water and sediment to settle below the end of the fuel supply pipe. Some fuel tanks use supply lines that take fuel directly from the bottom of the tank. If the engine is equipped with this system, regular maintenance of the fuel system filter is important.

Fuel Storage Tanks

Drain the water and the sediment from the fuel storage tank during the following conditions:

- Weekly
- Oil change
- Refill of the tank

This will help prevent water or sediment from being pumped from the storage tank into the engine fuel tank. A four micron(c) absolute filter for the breather vent on the fuel tank is also recommended. Refer to Special Publication, SENR9620, “Improving Fuel System Durablity”.

If a bulk storage tank has been refilled or moved recently, allow adequate time for the sediment to settle before filling the engine fuel tank. Internal baffles in the bulk storage tank will also help trap sediment. Filtering fuel that is pumped from the storage tank helps to ensure the quality of the fuel. When possible, water separators should be used.

i02121526

Hoses and Clamps - Inspect/Replace

SMCS Code: 7554-040; 7554-510

S/N: C6F1-Up

S/N: C7H1-Up

S/N: C6J1-Up

S/N: C6L1-Up

S/N: G7L1-Up

S/N: C6M1-Up

S/N: C6N1-Up

S/N: C8W1-Up

S/N: C7Y1-Up

S/N: C8Y1-Up

Inspect all hoses for leaks that are caused by the following conditions:

- Cracking
- Softness
- Loose clamps

Replace hoses that are cracked or soft. Tighten any loose clamps.

NOTICE
Do not bend or strike high pressure lines. Do not install bent or damaged lines, tubes or hoses. Repair any loose or damaged fuel and oil lines, tubes and hoses. Leaks can cause fires. Inspect all lines, tubes and hoses carefully. Tighten all connections to the recommended torque.

Check for the following conditions:

- End fittings that are damaged or leaking
- Outer covering that is chafed or cut
- Exposed wire that is used for reinforcement
- Outer covering that is ballooning locally
- Flexible part of the hose that is kinked or crushed
- Armoring that is embedded in the outer covering

A constant torque hose clamp can be used in place of any standard hose clamp. Ensure that the constant torque hose clamp is the same size as the standard clamp.

Due to extreme temperature changes, the hose will heat set. Heat setting causes hose clamps to loosen. This can result in leaks. A constant torque hose clamp will help to prevent loose hose clamps.

Each installation application can be different. The differences depend on the following factors:

- Type of hose
- Type of fitting material
- Anticipated expansion and contraction of the hose
- Anticipated expansion and contraction of the fittings

Replace the Hoses and the Clamps

⚠ WARNING

Pressurized System: Hot coolant can cause serious burns. To open the cooling system filler cap, stop the engine and wait until the cooling system components are cool. Loosen the cooling system pressure cap slowly in order to relieve the pressure.

1. Stop the engine. Allow the engine to cool.
2. Loosen the cooling system filler cap slowly in order to relieve any pressure. Remove the cooling system filler cap.

Note: Drain the coolant into a suitable, clean container. The coolant can be reused.

3. Drain the coolant from the cooling system to a level that is below the hose that is being replaced.
4. Remove the hose clamps.
5. Disconnect the old hose.
6. Replace the old hose with a new hose.
7. Install the hose clamps with a torque wrench.

Note: Refer to the Specifications, SENR3130, “Torque Specifications” in order to locate the proper torques.

8. Refill the cooling system.
9. Clean the cooling system filler cap. Inspect the cooling system filler cap's gaskets. Replace the cooling system filler cap if the gaskets are damaged. Install the cooling system filler cap.
10. Start the engine. Inspect the cooling system for leaks.

i02677504

Overhaul Considerations

SMCS Code: 7595-043

S/N: C6F1-Up

S/N: C7H1-Up

S/N: C6J1-Up

S/N: C6L1-Up

S/N: G7L1-Up

S/N: C6M1-Up

S/N: C6N1-Up

S/N: C8W1-Up

S/N: C7Y1-Up

S/N: C8Y1-Up

Reduced hours of operation at full load will result in a lower average power demand. A decreased average power demand should increase both the engine service life and the overhaul interval.

The need for an overhaul is generally indicated by increased fuel consumption and by reduced power.

The following factors are important when a decision is being made on the proper time for an engine overhaul:

- The need for preventive maintenance
- The quality of the fuel that is being used
- The operating conditions
- The results of the S·O·S analysis

Oil Consumption as an Overhaul Indicator

Oil consumption, fuel consumption, and maintenance information can be used to estimate the total operating cost for your Caterpillar engine. Oil consumption can also be used to estimate the required capacity of a makeup oil tank that is suitable for the maintenance intervals.

Oil consumption is in proportion to the percentage of the rated engine load. As the percentage of the engine load is increased, the amount of oil that is consumed per hour also increases.

The oil consumption rate (brake specific oil consumption) is measured in grams per kW/h (lb per bhp). The brake specific oil consumption (BSOC) depends on the engine load. Consult your Caterpillar dealer for assistance in determining the typical oil consumption rate for your engine.

When an engine's oil consumption has risen to three times the original oil consumption rate due to normal wear, an engine overhaul should be scheduled. There may be a corresponding increase in blowby and a slight increase in fuel consumption.

Overhaul Recommendation

Caterpillar recommends replacement of the engine. For more information about replacement of the engine, see your Caterpillar dealer. Engine components are available in a standard size only.

Cleaning

Caterpillar recommends the use of Hydrosolv Liquid Cleaners. Table 31 lists the Hydrosolv Liquid Cleaners that are available from your Caterpillar dealer.

Table 31

HydrosolvLiquid Cleaners		
Part Number	**Description**	**Size**
1U-8812	Hydrosolv4165	4 L (1 US gallon)
1U-5490		19 L (5 US gallon)
8T-7570		208 L (55 US gallon)
1U-8804	Hydrosolv100	4 L (1 US gallon)
1U-5492		19 L (5 US gallon)
8T-5571		208 L (55 US gallon)

Obtain Coolant Analysis

The concentration of supplemental coolant additive (SCA) should be checked regularly with test kits or with S·O·S Coolant Analysis (Level I).

A coolant analysis can be conducted in order to verify the condition of the water that is being used in the cooling system. A full water analysis can be obtained by consulting your local water utility company or an agricultural agent. Private laboratories are also available for water analysis.

Caterpillar Inc. recommends an S·O·S Coolant Analysis (Level II).

S·O·S Coolant Analysis (Level II)

An S·O·S Coolant Analysis (Level II) is a comprehensive coolant analysis which completely analyzes the coolant and the effects on the cooling system. An S·O·S Coolant Analysis (Level II) provides the following information:

- Complete S·O·S Coolant Analysis (Level I)
- Visual inspection of properties
- Identification of metal corrosion
- Identification of contaminants
- Identification of built up impurities (corrosion and scale)

S·O·S Coolant Analysis (Level II) provides a report of the results of both the analysis and the maintenance recommendations.

For more information about coolant analysis, see your Caterpillar dealer.

i02559063

Radiator - Clean

SMCS Code: 1353-070

S/N: C6F1-Up

S/N: C7H1-Up

S/N: C6J1-Up

S/N: C6L1-Up

S/N: G7L1-Up

S/N: C6M1-Up

S/N: C6N1-Up

S/N: C8W1-Up

S/N: C7Y1-Up

S/N: C8Y1-Up

Note: Adjust the frequency of cleaning according to the effects of the operating environment.

Inspect the radiator for these items: damaged fins, corrosion, dirt, grease, insects, leaves, oil, and other debris. Clean the radiator, if necessary.

⚠ WARNING

Personal injury can result from air pressure.

Personal injury can result without following proper procedure. When using pressure air, wear a protective face shield and protective clothing.

The maximum air pressure for cleaning purposes must be reduced to 205 kPa (30 psi) when the air nozzle is deadheaded.

Pressurized air is the preferred method for removing loose debris. Direct the air in the opposite direction of the fan's air flow. Hold the nozzle approximately 6 mm (0.25 inch) away from the fins. Slowly move the air nozzle in a direction that is parallel with the tubes. This will remove debris that is between the tubes.

Pressurized water may also be used for cleaning. The maximum water pressure for cleaning purposes must be less than 275 kPa (40 psi). Use pressurized water in order to soften mud. Clean the core from both sides.

Use a degreaser and steam for removal of oil and grease. Clean both sides of the core. Wash the core with detergent and hot water. Thoroughly rinse the core with clean water.

After cleaning, start the engine and accelerate the engine to high idle rpm. This will help in the removal of debris and drying of the core. Stop the engine. Use a light bulb behind the core in order to inspect the core for cleanliness. Repeat the cleaning, if necessary.

Inspect the fins for damage. Bent fins may be opened with a “comb”. Inspect these items for good condition: welds, mounting brackets, air lines, connections, clamps, and seals. Make repairs, if necessary.

For more detailed information on cleaning and inspection, refer to Special Publication, SEBD0518, “Know Your Cooling System”.

i00151038

Severe Service Application - Check

SMCS Code: 1000-535

S/N: C6F1-Up

S/N: C7H1-Up

S/N: C6J1-Up

S/N: C6L1-Up

S/N: G7L1-Up

S/N: C6M1-Up

S/N: C6N1-Up

S/N: C8W1-Up

S/N: C7Y1-Up

S/N: C8Y1-Up

Severe service is an application of an engine that exceeds current published standards for that engine. Caterpillar maintains standards for the following engine parameters:

- Performance (power range, speed range, and fuel consumption)
- Fuel quality
- Altitude range
- Maintenance intervals
- Oil selection and maintenance
- Coolant selection and maintenance
- Environmental qualities
- Installation

Refer to the standards for the engine or consult with your Caterpillar dealer in order to determine if the engine is operating within the defined parameters.

Severe service operation can accelerate component wear. Engines that operate under severe conditions may need more frequent maintenance intervals in order to ensure maximum reliability and retention of full service life.

Due to individual applications, it is not possible to identify all of the factors which can contribute to severe service operation. Consult your Caterpillar dealer for the unique maintenance that is necessary for the engine.

The operating environment, improper operating procedures and improper maintenance procedures can be factors which contribute to severe service conditions.

Environmental Factors

Ambient temperatures – The engine may be exposed to extended operation in extremely cold environments or hot environments. Valve components can be damaged by carbon buildup if the engine is frequently started and stopped in very cold temperatures. Extremely hot inlet air reduces engine performance.

Air Quality – The engine may be exposed to extended operation in an environment that is dirty or dusty, unless the equipment is cleaned regularly. Mud, dirt and dust can encase components. Maintenance can be very difficult. The buildup can contain corrosive chemicals.

Buildup – Compounds, elements, corrosive chemicals and salt can damage some components.

Altitude – Problems can arise when the engine is operated at altitudes that are higher than the intended settings for that application. Necessary adjustments should be made.

Improper Operating Procedures

- Extended operation at low idle
- Frequent hot shutdowns
- Operating at excessive loads
- Operating at excessive speeds
- Operating outside the intended application

Improper Maintenance Procedures

- Extending the maintenance intervals
- Failure to use recommended fuel, lubricants and coolant/antifreeze

i00651416

Starting Motor - Inspect

SMCS Code: 1451-040; 1453-040

S/N: C6F1-Up

S/N: C7H1-Up

S/N: C6J1-Up

S/N: C6L1-Up

S/N: G7L1-Up

S/N: C6M1-Up

S/N: C6N1-Up

S/N: C8W1-Up

S/N: C7Y1-Up

S/N: C8Y1-Up

Caterpillar Inc. recommends a scheduled inspection of the starting motor. If the starting motor fails, the engine may not start in an emergency situation.

Check the starting motor for proper operation. Check the electrical connections and clean the electrical connections. Refer to the Service Manual for more information on the checking procedure and for specifications or consult your Caterpillar dealer for assistance.

i02226957

Turbocharger - Inspect (If Equipped)

SMCS Code: 1052-040; 1052

S/N: C6F1-Up

S/N: C7H1-Up

S/N: C6J1-Up

S/N: C6L1-Up

S/N: G7L1-Up

S/N: C6M1-Up

S/N: C6N1-Up

S/N: C8W1-Up

S/N: C7Y1-Up

S/N: C8Y1-Up

A regular visual inspection of the turbocharger is recommended. Any fumes from the crankcase are filtered through the air inlet system. Therefore, by-products from oil and from combustion can collect in the turbocharger compressor housing. Over time, this buildup can contribute to loss of engine power, increased black smoke and overall loss of engine efficiency.

If the turbocharger fails during engine operation, damage to the turbocharger compressor wheel and/or to the engine may occur. Damage to the turbocharger compressor wheel can cause additional damage to the pistons, the valves, and the cylinder head.

NOTICE
Turbocharger bearing failures can cause large quantities of oil to enter the air intake and exhaust systems. Loss of engine lubricant can result in serious engine damage.

Minor leakage of oil into a turbocharger under extended low idle operation should not cause problems as long as a turbocharger bearing failure has not occured.

When a turbocharger bearing failure is accompanied by a significant engine performance loss (exhaust smoke or engine rpm up at no load), do not continue engine operation until the turbocharger is renewed.

A visual inspection of the turbocharger can minimize unscheduled downtime. A visual inspection of the turbocharger can also reduce the chance for potential damage to other engine parts.

Removal and Installation

Note: The turbochargers that are supplied are nonserviceable.

For options regarding the removal, installation, repair and replacement, consult your Caterpillar dealer. Refer to the Service Manual for this engine for the procedure and specifications.

Inspecting

NOTICE
The compressor housing for the turbocharger must not be removed from the turbocharger for cleaning.

The actuator linkage is connected to the compressor housing. If the actuator linkage is moved or disturbed the engine may not comply with emmissions legislation.

1. Remove the pipe from the turbocharger exhaust outlet and remove the air intake pipe to the turbocharger. Visually inspect the piping for the presence of oil. Clean the interior of the pipes in order to prevent dirt from entering during reassembly.

2. Check for the presence of oil. If oil is leaking from the back side of the compressor wheel, there is a possibility of a failed turbocharger oil seal.

   The presence of oil may be the result of extended engine operation at low idle. The presence of oil may also be the result of a restriction of the line for the intake air (clogged air filters), which causes the turbocharger to slobber.

3. Inspect the bore of the housing of the turbine outlet for corrosion.

4. Fasten the air intake pipe and the exhaust outlet pipe to the turbocharger housing.

i00632301

Walk-Around Inspection

SMCS Code: 1000-040

S/N: C6F1-Up

S/N: C7H1-Up

S/N: C6J1-Up

S/N: C6L1-Up

S/N: G7L1-Up

S/N: C6M1-Up

S/N: C6N1-Up

S/N: C8W1-Up

S/N: C7Y1-Up

S/N: C8Y1-Up

Inspect the Engine for Leaks and for Loose Connections

A walk-around inspection should only take a few minutes. When the time is taken to perform these checks, costly repairs and accidents can be avoided.

For maximum engine service life, make a thorough inspection of the engine compartment before starting the engine. Look for items such as oil leaks or coolant leaks, loose bolts, worn belts, loose connections and trash buildup. Make repairs, as needed:

- The guards must be in the proper place. Repair damaged guards or replace missing guards.
- Wipe all caps and plugs before the engine is serviced in order to reduce the chance of system contamination.

NOTICE
For any type of leak (coolant, lube, or fuel) clean up the fluid. If leaking is observed, find the source and correct the leak. If leaking is suspected, check the fluid levels more often than recommended until the leak is found or fixed, or until the suspicion of a leak is proved to be unwarranted.

NOTICE
Accumulated grease and/or oil on an engine or deck is a fire hazard. Remove this debris with steam cleaning or high pressure water.

- Ensure that cooling lines are properly clamped and tight. Check for leaks. Check the condition of all pipes.
- Inspect the water pump for coolant leaks.

Note: The water pump seal is lubricated by coolant in the cooling system. It is normal for a small amount of leakage to occur as the engine cools down and the parts contract.

Excessive coolant leakage may indicate the need to replace the water pump seal. For the removal of water pump and the installation of water pump and/or seals, refer to the Service Manual for the engine or consult your Caterpillar dealer.

- Inspect the lubrication system for leaks at the front crankshaft seal, the rear crankshaft seal, the oil pan, the oil filters and the valve cover.
- Inspect the fuel system for leaks. Look for loose fuel line clamps.
- Inspect the piping for the air inlet system and the elbows for cracks and for loose clamps.
- Inspect the alternator belt and the accessory drive belts for cracks, breaks or other damage.

Belts for multiple groove pulleys must be replaced as matched sets. If only one belt is replaced, the belt will carry more load than the belts that are not replaced. The older belts are stretched. The additional load on the new belt could cause the belt to break.

- Drain the water and the sediment from fuel tanks on a daily basis in order to ensure that only clean fuel enters the fuel system.
- Inspect the wiring and the wiring harnesses for loose connections and for worn wires or frayed wires.
- Inspect the ground strap for a good connection and for good condition.
- Inspect the engine-to-frame ground strap for a good connection and for good condition.
- Disconnect any battery chargers that are not protected against the current drain of the starting motor. Check the condition and the electrolyte level of the batteries, unless the engine is equipped with a maintenance free battery.
- Check the condition of the gauges. Replace any gauges which are cracked or can not be calibrated.

i02226958

Water Pump - Inspect

SMCS Code: 1361-040; 1361

S/N: C6F1-Up

S/N: C7H1-Up

S/N: C6J1-Up

S/N: C6L1-Up

S/N: G7L1-Up

S/N: C6M1-Up

S/N: C6N1-Up

S/N: C8W1-Up

S/N: C7Y1-Up

S/N: C8Y1-Up

A failed water pump may cause severe engine overheating problems that could result in the following conditions:

- Cracks in the cylinder head
- A piston seizure
- Other potential damage to the engine

Note: The water pump seal is lubricated by the coolant in the cooling system. It is normal for a small amount of leakage to occur as the engine cools down and parts contract.

Visually inspect the water pump for leaks. Renew the water pump seal or the water pump if there is an excessive leakage of coolant. Refer to the Disassembly and Assembly Manual, “Water Pump - Remove and Install” for the disassembly and assembly procedure.

Warranty Section

Warranty Information

i01087950

Emissions Warranty Information

SMCS Code: 1000

S/N: C6F1-Up

S/N: C7H1-Up

S/N: C6J1-Up

S/N: C6L1-Up

S/N: G7L1-Up

S/N: C6M1-Up

S/N: C6N1-Up

S/N: C8W1-Up

S/N: C7Y1-Up

S/N: C8Y1-Up

This engine may be certified to comply with exhaust emission standards and gaseous emission standards that are prescribed by law at the time of manufacture, and this engine may be covered by an Emissions Warranty. A detailed explanation of the Emissions Warranty that is applicable to emissions certified engines is found in Supplement, SEBU6981, “Federal Emissions Control Warranty Information”. Consult your authorized Caterpillar dealer to determine if your engine is emissions certified and if your engine is subject to an Emissions Warranty.

Reference Information Section

Engine Ratings

i00727327

Engine Rating Conditions

SMCS Code: 1000

S/N: C6F1-Up

S/N: C7H1-Up

S/N: C6J1-Up

S/N: C6L1-Up

S/N: G7L1-Up

S/N: C6M1-Up

S/N: C6N1-Up

S/N: C8W1-Up

S/N: C7Y1-Up

S/N: C8Y1-Up

All engine ratings are in compliance with the following standard ambient air conditions of “SAE J1349”:

- 99 kPa (29.3 inches of Hg)
- 30 percent relative humidity
- A temperature of 25 °C (77 °F)

Ratings relate to the standard conditions of “ISO8665”, of “ISO3046/1”, of “DIN6271”, and of “BS5514”.

The engine ratings are based on the following fuel specifications:

- Low heat value (LHV) of the fuel of 42 780 kJ/kg (18,390 Btu/lb) at 29 °C (84 °F)
- Gravity (API) of 35 degrees at 15 °C (60 °F)
- Specific gravity of .849 at 15 °C (60 °F)
- Density of 850 kg/m^3 (7.085 lb/US gal)

The engine ratings are gross output ratings.

Gross Output Ratings – The total output capability of the engine that is equipped with standard accessories.

Standard accessories include the following components:

- Oil pumps
- Fuel pumps
- Water pumps

Subtract the power that is required to drive auxiliary components from the gross output. This will produce the net power that is available for the external load (flywheel).

i00819749

Engine Rating Definitions

SMCS Code: 1000

S/N: C6F1-Up

S/N: C7H1-Up

S/N: C6J1-Up

S/N: C6L1-Up

S/N: G7L1-Up

S/N: C6M1-Up

S/N: C6N1-Up

S/N: C8W1-Up

S/N: C7Y1-Up

S/N: C8Y1-Up

It is important to know the use of the engine so that the rating will match the operating profile. The proper rating selection is also important so that the customer's perception of price and value is realized.

In selecting a rating for a specific application, the most important consideration is the time that is spent at full throttle. These rating definitions identify the percent of time at full throttle. The definitions also identify the corresponding times below rated rpm.

Note: The examples of the applications are only for reference. For an exact determination of the appropriate rating, follow the OEM specifications or consult your Caterpillar dealer.

A Rating – This rating is used for heavy-duty applications that are operated at rated load and at rated rpm up to 100 percent. This rating is used for engines that operate without interruption of load cycling. Typical applications include the following examples: pipeline pumping and ventilation.

B Rating – This rating is used when power and/or rpm are cyclic. The engine should be run at full load. The engine should not exceed 80 percent of the duty cycle. Typical applications include the following examples: irrigation, operation where normal pump demand is 85 percent of the engine rating, oil pumping/drilling, field mechanical pumping/drilling, and stationary/plant air compressors.

C Rating – This rating is used when power and/or rpm are cyclic. The horsepower and the rpm of the engine can be utilized continuously for one hour. This is followed by one hour of operation at the A rating or below the A rating. The engine should be run at full load. The engine should not exceed 50 percent of the duty cycle. Typical applications include the following examples: agricultural tractors, harvesters and combines, off-highway trucks, fire pumps, blast hole drills, rock curshers, wood chippers with high torque rise, and oil field hoisting.

D Rating – This rating is used when rated power is required for periodic overloads. The maximum horsepower and the rpm of the engine can be utilized continuously for a maximum of 30 minutes. This is followed by one hour of operation at the C rating. The engine should be run at full load. The engine should not exceed 10 percent of the duty cycle. Typical applications include the following examples: offshore cranes, runway snow blowers, water well drills, portable air compressors, and fire pump certification power.

E Rating – This rating is used when rated power is required for a short time for initial starting or for sudden overload. The rating is also used for emergency service when standard power is not available. The horsepower and the rpm of the engine can be utilized continuously for a maximum of 15 minutes. This is followed by one hour of operation at the C rating or by the duration of the emergency. The engine should be run at full load. The engine should not exceed 5 percent of the duty cycle. Typical applications include the following examples: standby centrifugal water pumps, oil field well servicing, crash trucks, portable air compressors, and gas turbine starting motors.

NOTICE

Operating engines above the rating definitions can result in shorter service life before overhaul.

Customer Service

i03201484

Customer Assistance

SMCS Code: 1000

S/N: C6F1-Up

S/N: C7H1-Up

S/N: C6J1-Up

S/N: C6L1-Up

S/N: G7L1-Up

S/N: C6M1-Up

S/N: C6N1-Up

S/N: C8W1-Up

S/N: C7Y1-Up

S/N: C8Y1-Up

USA and Canada

When a problem arises concerning the operation of an engine or concerning the service of an engine, the problem will normally be managed by the dealer in your area.

Your satisfaction is a primary concern to Caterpillar and to Caterpillar dealers. If you have a problem that has not been handled to your complete satisfaction, follow these steps:

1. Discuss your problem with a manager from the dealership.

2. If your problem cannot be resolved at the dealer level without additional assistance, use the phone number that is listed below to talk with a Field Service Coordinator:

   1-800-447-4986

   The normal hours are from 8:00 to 4:30 Monday through Friday Central Standard Time.

3. If your needs have not been met still, submit the matter in writing to the following address:

   Caterpillar Inc.
   Marine Center of Excellence
   Manager, Customer Service
   111 Southchase Blvd
   Fountain Inn, SC 29644

Please keep in mind: probably, your problem will ultimately be solved at the dealership, using the dealership's facilities, equipment, and personnel. Therefore, follow the steps in sequence when a problem is experienced.

Outside of the USA and of Canada

If a problem arises outside the USA and outside Canada, and if the problem cannot be resolved at the dealer level, consult the appropriate Caterpillar office.

Latin America, Mexico, Carribean
Caterpillar Americas Co.
701 Waterford Way, Suite 200
Miami, FL 33126-4670
USA
Phone: 305-476-6800
Fax: 305-476-6801

Europe, Africa, and Middle East
Caterpillar Overseas S.A.
76 Route de Frontenex
P.O. Box 6000
CH-1211 Geneva 6
Switzerland
Phone: 22-849-4444
Fax: 22-849-4544

Far East
Caterpillar Asia Pte. Ltd.
7 Tractor Road
Jurong, Singapore 627968
Republic of Singapore
Phone: 65-662-8333
Fax: 65-662-8302

China
Caterpillar China Ltd.
37/F., The Lee Gardens
33 Hysan Avenue
Causeway Bay
G.P.O. Box 3069
Hong Kong
Phone: 852-2848-0333
Fax: 852-2848-0440

Japan
Shin Caterpillar Mitsubishi Ltd.
SBS Tower
10-1, Yoga 4-Chome
Setagaya-Ku, Tokyo 158-8530
Japan
Phone: 81-3-5717-1150
Fax: 81-3-5717-1177

Japan
Caterpillar Power Systems, Inc.
SBS Tower (14th floor)
4-10-1, Yoga
Setagaya-Ku, Tokyo 158-0097
Phone: 81-3-5797-4300
Fax: 81-3-5797-4359

Australia and New Zealand
Caterpillar of Australia Ltd.
1 Caterpillar Drive
Private Mail Bag 4
Tullamarine, Victoria 3043
Australia
Phone: 03-9953-9333
Fax: 03-9335-3366

i01028392

Ordering Replacement Parts

SMCS Code: 7567

S/N: C6F1-Up

S/N: C7H1-Up

S/N: C6J1-Up

S/N: C6L1-Up

S/N: G7L1-Up

S/N: C6M1-Up

S/N: C6N1-Up

S/N: C8W1-Up

S/N: C7Y1-Up

S/N: C8Y1-Up

⚠ WARNING

When replacement parts are required for this product Caterpillar recommends using Caterpillar replacement parts or parts with equivalent specifications including, but not limited to, physical dimensions, type, strength and material.

Failure to heed this warning can lead to premature failures, product damage, personal injury or death.

Quality Caterpillar replacement parts are available from Caterpillar dealers throughout the world. Caterpillar dealers' parts inventories are up-to-date. The parts stocks include all of the parts that are normally needed to protect your Caterpillar engine investment.

When you order parts, please specify the following information:

- Part number
- Part name
- Quantity

If there is a question concerning the part number, please provide your dealer with a complete description of the needed item.

When a Caterpillar engine requires maintenance and/or repair, provide the dealer with all the information that is stamped on the Information Plate. This information is described in this Operation and Maintenance Manual (Product Information Section).

Discuss the problem with the dealer. Inform the dealer about the conditions of the problem and the nature of the problem. Inform the dealer about when the problem occurs. This will help the dealer in troubleshooting the problem and solving the problem faster.

Reference Materials

i02627762

Reference Material

SMCS Code: 1000

S/N: C6F1-Up

S/N: C7H1-Up

S/N: C6J1-Up

S/N: C6L1-Up

S/N: G7L1-Up

S/N: C6M1-Up

S/N: C6N1-Up

S/N: C8W1-Up

S/N: C7Y1-Up

S/N: C8Y1-Up

The following literature can be obtained through any Caterpillar dealer.

Lubricants

- Special Publication, PEHP8038, “Data Sheet - Caterpillar Diesel Engine Oils (DEO) (CH-4) (North America)”
- Special Publication, PEHP9536, “Data Sheet - Caterpillar Diesel Engine Oil (DEO) (CF-4) (International only)”
- Special Publication, NEDG6022, “Cat Lubricating Grease”
- Special Publication, PEHP0002, “Data Sheet - Molybdenum (MPGM) Grease”
- Special Publication, NEHP6015, “Data Sheet - Caterpillar Special Purpose Grease (SPG)”
- Special Publication, SEBD0640, “Oil and Your Engine”
- Operation and Maintenance Manual, SEBU5898, “Cold Weather Recommendations”
- Operation and Maintenance Manual, SEBU6251, “Caterpillar Commercial Diesel Engine Fluids Recomendations”
- Special Publication, PEHP6001, “How To Take A Good Oil Sample”

Fuels

- Special Publication, SEBD0717, “Diesel Fuels and Your Engine”

Coolants

- Special Publication, PEHP4036, “Data Sheet - Extended Life Coolant”
- Special Publication, PEHP7057, “Data Sheet - S·O·S Coolant Analysis”
- Special Publication, SEBD0518, “Know Your Cooling System”
- Special Publication, SEBD0970, “Coolant and Your Engine”
- Label, PEEP5027, “Extended Life Coolant/ Antifreeze”

Miscellaneous

- Service Manual, REG1139F, “Service Manual Contents Microfiche”
- Service Manual, KENR6925, “C0.5, C0.7, C1.1, C1.5, C1.6 and C2.2 Industrial Engines”
- Systems Operation, Testing and Adjusting, KENR6228, “C0.5, C0.7, C1.1, C1.5, C1.6 and C2.2 Industrial Engines”
- Specifications, KENR6227, “C0.5, C0.7, C1.1, C1.5, C1.6 and C2.2 Industrial Engines.”
- Disassembly and Assembly, KENR6229, “C0.5, C0.7, C1.1, C1.5, C1.6 and C2.2 Industrial Engines”
- Specifications, SENR3130, “Torque Specifications”
- Special Publication, PECP9067, “One Safe Source” English language for use in NACD
- Special Publication, LEDM5615, “Caterpillar Marine Parts and Service Locations Directory”
- Special Publication, SEBF8029, “Index to Guidelines for Reusable Parts and Salvage Operations”
- Special Publication, SEBF8062, “Procedure to Inspect and Clean Air Filters”
- Special Instruction, SEHS9031, “Storage Procedure for Caterpillar Products”
- Special Publication, NEHS0526, “Service Technician Application Guide”

- Special Publication, SEBU6251, “Caterpillar Commercial Diesel Engine Fluids Recomendations”
- Special Instruction, SEHS7633, “Battery Test Procedure”
- Label, SEHS7332, “Danger Do Not Operate”

Emissions Warranty

This engine may be Certified and this engine may be covered by an Emissions Warranty. A detailed explanation of the Emissions Warranty that is applicable to Certified engines is found in Supplement, SMBU6981, “Emissions Control Warranty Information”. The engine is Certified if the engine has a special label that verifies the certification. A Caterpillar dealer can also inform you if the engine is certified.

i02780825

Additional Reference Material

SMCS Code: 1000

S/N: C6F1-Up

S/N: C7H1-Up

S/N: C6J1-Up

S/N: C6L1-Up

S/N: G7L1-Up

S/N: C6M1-Up

S/N: C6N1-Up

S/N: C8W1-Up

S/N: C7Y1-Up

S/N: C8Y1-Up

The “Society of Automotive Engineers (SAE) Specifications” can be found in your SAE handbook. This publication can also be obtained from the following locations: local technological society, local library, and local college. If necessary, consult SAE at the following address:

SAE International
400 Commonwealth Drive
Warrendale, PA, USA 15096-0001
Telephone: (724) 776-4841

The “American Petroleum Institute Publication No. 1509” can be obtained from the following locations: local technological society, local library, and local college. If necessary, consult API at the following address:

American Petroleum Institute
1220 L St. N.W.
Washington, DC, USA 20005
Telephone: (202) 682-8000

The International Organization for Standardization (ISO) offers information and customer service regarding international standards and standardizing activities. ISO can also supply information on the following subjects that are not controlled by ISO: national standards, regional standards, regulations, certification, and related activities. Consult the member of ISO in your country.

International Organization for Standardization (ISO)
1, rue de Varembé
Case postale 56
CH-1211 Genève 20
Switzerland
Telephone: +41 22 749 01 11
Facsimile: +41 22 733 34 30
E-mail: central@iso.ch
Web site: http://www.iso.ch

European classifications are established by the Counseil International Des Machines a Combustion (CIMAC) (International Council on Combustion Engines).

CIMAC Central Secretariat
Lyoner Strasse 18
60528 Frankfurt
Germany
Telephone: +49 69 6603 1567
Facsimile: +49 69 6603 1566

i00912149

Maintenance Records

SMCS Code: 1000

S/N: C6F1-Up

S/N: C7H1-Up

S/N: C6J1-Up

S/N: C6L1-Up

S/N: G7L1-Up

S/N: C6M1-Up

S/N: C6N1-Up

S/N: C8W1-Up

S/N: C7Y1-Up

S/N: C8Y1-Up

Caterpillar Inc. recommends the retention of accurate maintenance records. Accurate maintenance records can be used for the following purposes:

- Determine operating costs.
- Establish maintenance schedules for other engines that are operated in the same environment.
- Show compliance with the required maintenance practices and maintenance intervals.

Maintenance records can be used for a variety of other business decisions that are related to engine maintenance.

Maintenance records are a key element of a maintenance program that is well managed. Accurate maintenance records can help your Caterpillar dealer to fine tune the recommended maintenance intervals in order to meet the specific operating situation. This should result in a lower engine operating cost.

Records should be kept for the following items:

Fuel Consumption – A record of fuel consumption is essential in order to determine when the load sensitive components should be inspected or repaired. Fuel consumption also determines overhaul intervals.

Service Hours – A record of service hours is essential to determine when the speed sensitive components should be inspected or repaired.

Documents – These items should be easy to obtain, and these items should be kept in the engine history file. All of the documents should show this information: date, service hours, fuel consumption, unit number, and engine serial number. The following types of documents should be kept as proof of maintenance or repair for warranty:

Keep the following types of documents as proof of maintenance for warranty. Also, keep these types of documents as proof of repair for warranty:

- Dealer work orders and itemized bills
- Owner's repair costs
- Owner's receipts
- Maintenance log

i01176304

Maintenance Log

SMCS Code: 1000

S/N: C6F1-Up

S/N: C7H1-Up

S/N: C6J1-Up

S/N: C6L1-Up

S/N: G7L1-Up

S/N: C6M1-Up

S/N: C6N1-Up

S/N: C8W1-Up

S/N: C7Y1-Up

S/N: C8Y1-Up

Table 32

Engine Model		Customer Identifier		
Serial Number		Arrangement Number		
Service Hours	Quantity Of Fuel	Service Item	Date	Authorization

(continued)

(Table 32, contd)

Index

A

Additional Reference Material 112
After Starting Engine 41
After Stopping Engine..... 46
Aftercooler Core - Clean/Test (Air-To-Air Aftercooler) 63
Aftercooler Core - Inspect..... 63
Alternator - Inspect 64
Alternator and Fan Belts - Inspect/Adjust..... 64
  Adjustment..... 65
  Inspection..... 64
Alternator and Fan Belts - Replace 65

B

Battery - Replace..... 66
Battery Electrolyte Level - Check 67
Battery or Battery Cable - Disconnect 67
Before Starting Engine 16, 38
Burn Prevention..... 12
  Batteries..... 13
  Coolant..... 13
  Oils..... 13

C

Cold Weather Operation..... 47
Cold Weather Starting 39
Cooling System Coolant (DEAC) - Change..... 68
  Cooling Systems with Heavy Deposits or Plugging 69
  Drain 68
  Fill 69
  Flush 68
Cooling System Coolant (ELC) - Change..... 70
  Drain 70
  Fill 71
  Flush 70
Cooling System Coolant Extender (ELC) - Add..... 71
Cooling System Coolant Level - Check..... 72
Cooling System Coolant Sample (Level 1) - Obtain 73
Cooling System Coolant Sample (Level 2) - Obtain 74
Cooling System Supplemental Coolant Additive (SCA) - Test/Add..... 74
  Add the SCA, If Necessary 75
  S·O·S Coolant Analysis..... 75
  Test for SCA Concentration 74
Cooling System Water Temperature Regulator - Replace..... 76
Crushing Prevention and Cutting Prevention 15
Customer Assistance..... 109
  Outside of the USA and of Canada..... 109
  USA and Canada..... 109
Customer Service..... 109

D

Driven Equipment - Check..... 76

E

Electrical System..... 18
  Grounding Practices 18
Emergency Stopping 45
  Emergency Stop Button..... 45
Emissions Certification Film 32
Emissions Warranty Information..... 106
Engaging the Driven Equipment..... 43
Engine - Clean..... 77
Engine Air Cleaner Element (Dual Element) - Clean/Replace 77
  Cleaning the Primary Air Cleaner Elements 78
  Servicing the Air Cleaner Elements 77
Engine Air Cleaner Element (Single Element) - Inspect/Replace..... 80
Engine Air Cleaner Service Indicator - Inspect (If Equipped) 81
  Test the Service Indicator..... 82
Engine Air Precleaner - Check/Clean..... 82
Engine Crankcase Breather - Replace..... 83
Engine Description 25
  Engine Specifications..... 26
Engine Mounts - Inspect..... 84
Engine Oil and Filter - Change 86
  Drain the Engine Oil..... 86
  Fill the Engine Crankcase..... 87
  Replace the Oil Filter 86
Engine Oil Level - Check..... 84
Engine Oil Sample - Obtain..... 85
  Obtain the Sample and the Analysis..... 85
Engine Operation..... 42
Engine Protective Devices - Check 88
  Visual Inspection..... 88
Engine Rating Conditions 107
Engine Rating Definitions 107
Engine Ratings 107
Engine Shutoffs and Engine Alarms..... 36
  Alarms..... 36
  Shutoffs..... 36
  Testing the Shutoff and Alarm System..... 36
Engine Starting..... 17, 38
Engine Stopping 17, 45
Engine Valve Lash - Inspect/Adjust..... 88
Engine Warm-up..... 42

F

Features and Controls..... 36

Fire Prevention and Explosion Prevention 13
Ether 15
Fire Extinguisher 15
Lines, Tubes and Hoses 15
Foreword 5
California Proposition 65 Warning 5
Literature Information 4
Maintenance 4
Maintenance Intervals 4
Operation 4
Overhaul 4
Safety 4
Fuel and the Effect from Cold Weather 47
Fuel Conservation Practices 43
Fuel Injector - Test/Change 89
Removal and Installation of the Fuel Injection Nozzles 89
Fuel Related Components in Cold Weather 48
Fuel Filters 48
Fuel Heaters 49
Fuel Tanks 48
Fuel Shutoff 37
Fuel System - Prime 90
Fuel filters 90
Primary filter 90
Priming the system 91
Fuel System Primary Filter/Water Separator - Drain 94
Fuel System Secondary Filter - Replace 95
Fuel Filter with Canister 95
Fuel Filter with Element 96
Fuel filter with priming pump 96
Fuel Tank Water and Sediment - Drain 97
Drain the Water and the Sediment 97
Fuel Storage Tanks 98
Fuel Tank 97

G

Gauges and Indicators 35
General Hazard Information 10
Asbestos Information 11
Containing Fluid Spillage 11
Dispose of Waste Properly 12
Fluid Penetration 11
Lines, Tubes, and Hoses 12
Pressurized Air and Water 11

H

Hoses and Clamps - Inspect/Replace 98
Replace the Hoses and the Clamps 99

I

Important Safety Information 2

L

Lifting and Storage 33

M

Maintenance Interval Schedule 62
Maintenance Log 114
Maintenance Recommendations 60
Maintenance Records 113
Maintenance Section 50
Model View Illustrations 20
Model Views 20
Mounting and Dismounting 16

O

Operation Section 33
Ordering Replacement Parts 110
Overhaul Considerations 99
Oil Consumption as an Overhaul Indicator 99
Overhaul Recommendation 100

P

Plate Locations and Film Locations 31
Serial Number Plate (1) 31
Product Identification Information 31
Product Information Section 20
Product Lifting 33
Product Storage 34

R

Radiator - Clean 100
Radiator Restrictions 47
Reference Information Section 107
Reference Material 111
Coolants 111
Emissions Warranty 112
Fuels 111
Lubricants 111
Miscellaneous 111
Reference Materials 111
Reference Numbers 31
Record for Reference 31
Refill Capacities 50
Refill Capacities and Recommendations 50
Coolant Recommendations 57
Engine Oil 50
General Coolant Information 55
General Fuel Information 54
Lubricating Grease 54
Refill Capacity of the Cooling System 58
S·O·S Coolant Analysis 57

S

Safety Messages 6
Safety Section 6
Severe Service Application - Check 101
  Environmental Factors 102
  Improper Maintenance Procedures 102
  Improper Operating Procedures 102
Starting Motor - Inspect 102
Starting the Engine 39
Starting with Jump Start Cables 40
Stopping the Engine 45
System Pressure Release 60
  Coolant System 60
  Engine Oil 60
  Fuel System 60

T

Table of Contents 3
Turbocharger - Inspect (If Equipped) 103
  Inspecting 103
  Removal and Installation 103

W

Walk-Around Inspection 104
  Inspect the Engine for Leaks and for Loose Connections 104
Warranty Information 106
Warranty Section 106
Water Pump - Inspect 105
Welding on Engines with Electronic Controls 60

Product and Dealer Information

Note: For product identification plate locations, see the section “Product Identification Information” in the Operation and Maintenance Manual.

Delivery Date: _____

Product Information

Model: _____

Product Identification Number: _____

Engine Serial Number: _____

Transmission Serial Number: _____

Generator Serial Number: _____

Attachment Serial Numbers: _____

Attachment Information: _____

Customer Equipment Number: _____

Dealer Equipment Number: _____

Dealer Information

Name: _____ Branch: _____

Address: _____

_____

_____

	Dealer Contact	Phone Number	Hours
Sales:	_____	_____	_____
Parts:	_____	_____	_____
Service:	_____	_____	_____

©2010 Caterpillar
All Rights Reserved

Cat, Caterpillar, their respective logos, “Caterpillar Yellow” and the Power edge trade dress, as well as corporate and product identity used herein, are trademarks of Caterpillar and may not be used without permission.

Printed in U.S.A.

CATERPILLAR®

SEBP5284
September 2008

Parts Manual



See “General Information” for New Parts Manual Features.

C2.2 Industrial Engine

G7L1-Up (Engine)

This Parts Manual is also Available in PDF Format on Compact Disk (CD-ROM)- Caterpillar Form No. SERP5284

Product and Dealer Information

Note: For product identification plate locations, see the section “Product Identification Information” in the Operation and Maintenance Manual.

Delivery Date: _____

Product Information

Model: _____

Product Identification Number: _____

Engine Serial Number: _____

Transmission Serial Number: _____

Generator Serial Number: _____

Attachment Serial Numbers: _____

Attachment Information: _____

Customer Equipment Number: _____

Dealer Equipment Number: _____

Dealer Information

Name: _____ Branch: _____

Address: _____

_____

_____

	Dealer Contact	Phone Number	Hours
Sales:	_____	_____	_____
Parts:	_____	_____	_____
Service:	_____	_____	_____

MEMORANDA

TABLE OF CONTENTS

Name	Page
GENERAL INFORMATION	A2
REPAIR ALTERNATIVES	A4
SUPPLEMENTAL COOLANT ADDITIVES	A5
MAINTENANCE PARTS	A6
INDEX	A8
ENGINE ARRANGEMENT	1
ENGINE AR	1
ENGINE AR-PRIMARY	4
BASIC ENGINE	21
CAMSHAFT GP	21
COVER GP-FRONT HOUSING	33
COVER GP-VALVE MECHANISM	35
CRANKSHAFT GP	39
CYLINDER BLOCK GP	43
CYLINDER HEAD AS	47
CYLINDER HEAD GP	49
DRIVE GP-FRONT	53
DRIVE GP-FAN	54
FLYWHEEL GP	57
HOUSING GP-FLYWHEEL	63
HOUSING GP-FRONT	66
LIFTING GP-ENGINE	89
PAN GP-OIL	92
PARTS GP-MISCELLANEOUS	102
PISTON & ROD GP	103
PLUG GP-ENGINE	105
PLUG GP-OIL PAN	107
PULLEY GP-AUXILIARY DRIVE	109
PULLEY GP-CRANKSHAFT	110
PULLEY GP-WATER PUMP	112
V-BELT GP	114
VALVE MECHANISM GP	117
LUBRICATION SYSTEM	122
CONNECTION GP-OIL	122
FILLER GP-ENGINE OIL	123
FILTER GP-ENGINE OIL	127
MOUNTING GP-ENGINE OIL FILTER	128
PUMP GP-ENGINE OIL	129
COOLING SYSTEM	135
CONNECTION GP-WATER	135
CONNECTOR GP-CAB HEATER LINES	136
FAN GP-BLOWER	138
FAN GP-SUCTION	139
HOUSING GP-WATER REGULATOR	140
MOUNTING GP-FAN	142
PUMP GP-WATER	143
AIR INLET AND EXHAUST SYSTEM	151
CONNECTION GP-EXHAUST	151
MANIFOLD GP-EXHAUST	153
MUFFLER GP	156
TURBOCHARGER GP	157
FUEL SYSTEM	165
CONTROL GP-GOVERNOR	165
FILTER GP-FUEL	177
GOVERNOR GP	179
PUMP & MTG GP-FUEL TRANSFER	183
PUMP GP-FILTER & FUEL TRANSFER	184
PUMP GP-FUEL INJECTION	187
PUMP GP-FUEL PRIMING	203
PUMP GP-FUEL PRM & PRIM FILTER	204
PUMP GP-FUEL TRANSFER	206
ELECTRICAL AND STARTING SYSTEM	215
ALTERNATOR GP-CHARGING	215
CONNECTION GP-ELECTRICAL	217
CONTROL GP-MANUAL START/STOP	219
GLOW PLUG GP	222
SHUTOFF GP-ELECTRICAL	224
SOLENOID GP-SHUTOFF	225
STARTING MOTOR GP-ELECTRIC	226
SWITCH GP-PRESSURE	230
SWITCH GP-START	232
SWITCH GP-TEMPERATURE	233
OPERATOR STATION	234
INSTRUMENT GP	234
LAMP GP	235
PART NUMBER INDEX	B1

GENERAL INFORMATION

1. ENGINE IDENTIFICATION

Caterpillar engines are identified with Serial Numbers and Arrangement Numbers. In some cases, Modification Numbers are also used. The serial number plate which shows these numbers is mounted on the engine.

Caterpillar dealers need this information to determine which components were included on the engine when it was assembled at the factory. This permits accurate identification of replacement part numbers.

2. ORDERING PARTS

⚠ WARNING

When replacement parts are required for this product Caterpillar recommends using Caterpillar replacement parts or parts with equivalent specifications including, but not limited to, physical dimensions, type, strength and material.

Failure to heed this warning can lead to premature failures, product damage, personal injury or death.

Quality Caterpillar replacement parts are available from Caterpillar dealers throughout the world. Their parts inventories are up to date and include all parts normally required to protect your investment in Caterpillar Engines. Dealers may offer repair kits or remanufactured parts to allow selection of the most effective repair alternative for a particular situation. When ordering parts, your order should specify the quantity, part number, part name, and the serial number/product identification number of the engine for which the parts are needed.

3. PARTS MANUAL ORGANIZATION

Product information in this manual is presented as "information elements" that represent all of the components for the specific model. An Engine Arrangement is an example of an information element. The information elements are organized alphabetically by part name and secondarily by part number within each major section of the manual.

4. TABLE OF CONTENTS

A table of contents (TOC) is found at the beginning of the manual. The TOC lists each section of the manual with a complete list of all information elements organized as they appear in the manual. Page numbers are provided for quick reference to detailed parts identification illustrations and serviceable consist lists.

5. MAINTENANCE PARTS INDEX

The Maintenance Parts Index, located near the beginning of the manual, references most frequently used maintenance part numbers, providing description, quantity, usage and page number. This information is organized alphabetically by part description.

6. INDEX

The index located near the front of the manual is an alphabetical listing of all information elements included in the manual. Page numbers are provided for quick reference to detailed parts identification illustrations and serviceable consist lists.

7. PART NUMBER INDEX

A numerical index listing all part numbers and the corresponding page number(s) appears at the back of the manual.

8. CAPTIONS

Captions located at the beginning each information element identify the part number and part name along with additional descriptive information. S/N information found in each caption should be used to select correct information for a specific engine. Field replacement options, identification of optional attachment components, and where used ("part of") information is also provided.

The first line of a caption is shown in larger type font to indicate the beginning of an information element. Captions for additional pages that may be required to illustrate an information element will be shown in standard type font and will include the term *(contd.)* .

9. NON-SERVICED PARTS

In some instances it is necessary to display non-serviced parts that are a link to lower level serviceable consist lists. These non-serviced part numbers are shown in *italic* type indicating that they are not available. All consist lists have not been converted to reflect this enhancement.

10. PARTS LIST REFERENCE NUMBERS

Numbers shown in the Ref No column correspond to numbers used in the associated graphic(s). An alphabetic suffix may be added to a reference number to identify lower level consist items. Numbers shown in the Graphic Ref column refer to the graphic number identifier displayed in the lower left corner of each illustration. The Graphic Ref number may be used in combination with the item Ref No to determine the correct part number. There may be intentional omission of a Ref No in a consist list as information is updated to reflect the latest serviceable part numbers.

11. INDENTED PART NAMES

When a part name is indented in a parts list, it is part of (included in) the group or assembly under which it is indented.

12. ILLUSTRATION REFERENCE LETTERS

When necessary, illustrations contain reference letters (A, B, C etc.) that are intended to track lines and harnesses from one point to another. They are also used to show where to reconnect illustrations that have been separated.

13. ABBREVIATIONS AND SYMBOLS

O.D. – Outside Diameter
I.D. – Inside Diameter
A – Not Part Of This Group
B – Use As Required
C – Change From Previous Type
D – Order By The Meter
E – Order By The Centimeter
F – Not Shown
G – Order By The Inch
I – Refer To Hydraulic Information System
M – Metric Part
R – Remfg Part May Be Available
Y – Separate Illustration
Z – Not Serviced Separately

SIS *New Feature*

14. DESCRIPTION OF TYPE CHANGES

Type - A type is defined as any configuration change that requires an additional Information Element for an Arrangement, Group, or Assembly. If serial number breaks for types are not available, a type # (Type 1, Type 2, etc.) will be displayed in the caption. These "type" changes are identified with a "C" note (change from previous type) in the Parts List. Only the "types" that apply to this Parts Manual will be included. Additional types may exist causing "C" notes to appear on an Information Element when no other types are shown.

15. <END>

This symbol indicates the end of an information element.

NOTE:

Continuing improvement and advancement of product design may cause changes to your engine which may not be included in this publication. Whenever a question arises regarding your Caterpillar product or this publication, please consult your Caterpillar dealer for the latest available information.

REPAIR ALTERNATIVES

REMANUFACTURED COMPONENTS

As an option when making repairs consider Caterpillar Remanufactured Components. Components that are available through the Caterpillar Remanufactured Program are identified three ways in the parts book:

- with the letter R in the note field of the parts list
- with an R* at the beginning of the first line of the caption
- with an *R at the end of the first line of the caption

Typical components included in the Remanufacturing Program include:

ALTERNATORS
CONNECTING RODS
CRANKSHAFTS - UNDERSIZE
CRANKSHAFTS - UPGRADE TO NEW
CYLINDER HEADS
ELECTRONIC CONTROL MODULES (ECM)
ELECTRONIC SENSORS
FUEL INJECTORS
FUEL NOZZLES
FUEL PUMPS
GOVERNORS
OIL PUMPS
PISTONS
SHORT BLOCKS
STARTERS
TURBOCHARGERS - COMPLETE
TURBOCHARGER CARTRIDGES
WATER PUMPS

Caterpillar Remanufactured engines for many engine arrangements are also available.

SUPPLEMENTAL COOLANT ADDITIVES

CUSTOMER BENEFITS:

Protects against cavitation, foam, erosion, corrosion, and scale buildup in cooling systems.

- Provides measured coolant conditioner.

DESCRIPTION:

Additives deplete from the coolant with normal operation. For this reason, Supplemental Coolant Additives (SCA) must be added to all heavy duty coolants at regular intervals. In addition, when not using a fully formulated, pre-charged antifreeze, like Caterpillar's DEAC, an initial charge of SCA must be added to the cooling system. The amount of SCA added to the system is dependent on the capacity of the system.

The SCA for initial fill is provided as a liquid. SCA's for maintenance intervals are available in liquid form and as a spin-on element. (No Spin-on available for 3600 Family of Engines)

NOTE:

The amount of SCA added at initial fill is not the same as the amount added at maintenance intervals.

The coolant additive elements can be used with any ethylene or propylene glycol type antifreeze which meets ASTM D4985 or ASTM D5345 Specifications.

NOTE:

For use with standard heavy duty coolant only, not for use with Extended Life Coolant.

PARTS NEEDED:

Cooling System Capacity		Liquid SCA at Initial Fill	Liquid SCA at Maintenance*	Spin-on SCA Maintenance Element*
Liters	Gallons			
22-30	(6-8)	3P-2044 (1)	6V-3542 (1)	111-2370 (1)
30-38	(8-10)	3P-2044 (1) 6V-3542 (1)	111-2372 (1)	111-2369 (1)
38-49	(10-13)	3P-2044 (1) 8T-1589 (1)	111-2372 (1)	111-2369 (1)
49-64	(13-17)	3P-2044 (2)	8T-1589 (1)	9N-3368 (1)
64-83	(17-22)	3P-2044 (2) 8T-1589 (1)	111-2372 (1) 6V-3542 (1)	111-2371 (1)
83-114	(22-30)	3P-2044 (3) 8T-1589 (1)	3P-2044 (1)	9N-3718 (1)
114-163	(30-43)	3P-2044 (5)	3P-2044 (1) 6V-3542 (1)	111-2371 (2)
163-242	(43-64)	3P-2044 (8)	3P-2044 (2)	9N-3718 (2)

** Normal maintenance period is 250 hrs. See your Operation and Maintenance Manual for complete coolant maintenance instructions.*

( ) Indicates quantity required.

MAINTENANCE PARTS

DESCRIPTION	PART NUMBER	QTY	WHERE USED	PAGE
AIR INLET AND EXHAUST SYSTEM				
GAUZE (CRANKCASE BREATHER)	153-5939	1	TURBOCHARGER GP	157
		1	TURBOCHARGER GP	161
SEAL-VALVE COVER	233-0695	1	TURBOCHARGER GP	157
		1	TURBOCHARGER GP	161
BASIC ENGINE				
GAUZE (CRANKCASE BREATHER)	153-5939	1	COVER GP-VALVE MECHANISM	35
		1	COVER GP-VALVE MECHANISM	37
PLUG-DRAIN (ENGINE OIL DRAIN)	165-3605	2	PLUG GP-OIL PAN	108
PLUG-DRAIN (ENGINE OIL PAN)	218-2334	2	PLUG GP-OIL PAN	107
SEAL-VALVE COVER	233-0695	1	COVER GP-VALVE MECHANISM	35
		1	COVER GP-VALVE MECHANISM	37
V-BELT	211-5172	1	V-BELT GP	115
V-BELT (WATER PUMP)	211-5172	1	V-BELT GP	114
	295-0887	1	V-BELT GP	116
COOLING SYSTEM				
GASKET-COVER (TEMPERATURE REGULATOR)	154-1828	1	HOUSING GP-WATER REGULATOR	140
GASKET-COVER (WATER TEMPERATURE REGULATOR)	154-1828	1	CONNECTION GP-WATER	135
		1	HOUSING GP-WATER REGULATOR	141
REGULATOR-WATER TEMPERATURE	249-5541	1	PUMP GP-WATER	143
		1	PUMP GP-WATER	146
		1	PUMP GP-WATER	148
ELECTRICAL AND STARTING SYSTEM				
GLOW PLUG	172-4585	4	GLOW PLUG GP	222
	243-4402	4	GLOW PLUG GP	223
KEY-IGNITION	251-1871	1	SWITCH GP-START	232
ENGINE ARRANGEMENT				
V-BELT GP	311-9029	1	ENGINE AR-PRIMARY	7
		1	ENGINE AR-PRIMARY	12
		1	ENGINE AR-PRIMARY	18

MAINTENANCE PARTS

DESCRIPTION	PART NUMBER	QTY	WHERE USED	PAGE
FUEL SYSTEM				
FILTER AS-FUEL	033-7854	1	PUMP GP-FILTER & FUEL TRANSFER	184
		1	PUMP GP-FUEL TRANSFER	206
		1	PUMP GP-FUEL TRANSFER	211
		1	PUMP GP-FUEL TRANSFER	213
	243-6411	1	PUMP GP-FUEL TRANSFER	206
		1	PUMP GP-FUEL TRANSFER	209
		1	PUMP GP-FUEL TRANSFER	213
FILTER ELEMENT-FUEL	276-1806	1	PUMP GP-FUEL PRM & PRIM FILTER	204
FILTER ELEMENT-FUEL (FILTER)	276-1806	1	FILTER GP-FUEL	177
FILTER-FUEL	150-4142	1	FILTER GP-FUEL	178
GASKET	069-2922	2	PUMP GP-FUEL TRANSFER	211
GASKET (FUEL FILTER)	069-2922	2	PUMP GP-FILTER & FUEL TRANSFER	184
		2	PUMP GP-FUEL TRANSFER	206
		2	PUMP GP-FUEL TRANSFER	213
KIT-ELEMENT (FUEL FILTER)	067-6987	1	PUMP GP-FILTER & FUEL TRANSFER	184
		1	PUMP GP-FUEL TRANSFER	206
		1	PUMP GP-FUEL TRANSFER	211
		1	PUMP GP-FUEL TRANSFER	213
PLUG-DRAIN (FUEL FILTER)	302-7777	3	FILTER GP-FUEL	177
PLUG-DRAIN (WATER SEPARATOR)	302-7777	3	PUMP GP-FUEL PRM & PRIM FILTER	204
LUBRICATION SYSTEM				
CAP-OIL FILLER (ENGINE)	217-7358	1	FILLER GP-ENGINE OIL	123
		2	FILLER GP-ENGINE OIL	125
	289-6120	1	FILLER GP-ENGINE OIL	123
		1	FILLER GP-ENGINE OIL	125
FILTER AS-ENGINE OIL	220-1523	1	FILTER GP-ENGINE OIL	127
SEAL (ENGINE OIL FILL CAP)	153-5933	1	FILLER GP-ENGINE OIL	123
	288-6593	1	FILLER GP-ENGINE OIL	123
		1	FILLER GP-ENGINE OIL	125
SEAL (ENGINE OIL FILL)	153-5933	2	FILLER GP-ENGINE OIL	125
OPERATOR STATION				
LAMP (INDICATOR)	291-4755	1	LAMP GP	236
LAMP (INDICATORS)	198-5310	1	LAMP GP	235

INDEX

Name	Page

A

ALTERNATOR GP-CHARGING 215, 216

C

CAMSHAFT GP 21, 22, 23, 24, 26, 27, 29, 31
CAP-OIL FILLER (ENGINE) 123, 125
CONNECTION GP-ELECTRICAL 217, 218
CONNECTION GP-EXHAUST 151, 152
CONNECTION GP-OIL–ENGINE 122
CONNECTION GP-WATER 135
CONNECTOR GP-CAB HEATER LINES 136, 137
CONTROL GP-GOVERNOR 165, 167, 169, 171, 173, 175
CONTROL GP-MANUAL START/STOP 219, 220, 221
COVER GP-FRONT HOUSING 33, 34
COVER GP-VALVE MECHANISM 35, 37
CRANKSHAFT GP 39, 41
CYLINDER BLOCK GP 43, 45
CYLINDER HEAD AS 47
CYLINDER HEAD GP 49, 51, 52

D

DRIVE GP-FAN 54, 55, 56
DRIVE GP-FRONT 53

E

ENGINE AR 1, 2, 3
ENGINE AR-PRIMARY 4, 5, 6, 7, 8, 9, 10, 11, 12, 13, 14, 15, 16, 17, 18, 19, 20

F

FAN GP-BLOWER 138
FAN GP-SUCTION 139
FILLER GP-ENGINE OIL 125
FILLER GP-ENGINE OIL–ENGINE 123
FILTER AS-ENGINE OIL 127
FILTER AS-FUEL 184, 206, 209, 211, 213
FILTER ELEMENT-FUEL 204
FILTER ELEMENT-FUEL (FILTER) 177
FILTER GP-ENGINE OIL 127
FILTER GP-FUEL 177, 178
FILTER-FUEL 178
FLYWHEEL GP 57, 58, 59, 60, 61, 62

G

GASKET 211
GASKET (FUEL FILTER) 184, 206, 213

INDEX

Name	Page
GASKET-COVER (TEMPERATURE REGULATOR)	140
GASKET-COVER (WATER TEMPERATURE REGULATOR)	135 141
GAUGE AS-OIL LEVEL (DIPSTICK)	100
GAUGE AS-OIL LEVEL (DIPSTICK) (ENGINE)	96
GAUGE-OIL LEVEL (DIPSTICK) (ENGINE)	92 94 98
GAUZE (CRANKCASE BREATHER)	35 37 157 161
GEAR GP	129
GEAR GP (62-TEETH)	132
GLOW PLUG	222 223
GLOW PLUG GP	222 223
GOVERNOR GP	179 181

H

HOUSING GP-FLYWHEEL	63 64 65
HOUSING GP-FRONT	66 67 71 75 79 81 82 84 85 86 87 88
HOUSING GP-WATER REGULATOR	140 141

I

INSTRUMENT GP	234

K

KEY-IGNITION	232
KIT-ELEMENT (FUEL FILTER)	184 206 211 213

L

LAMP (INDICATOR)	236
LAMP (INDICATORS)	235
LAMP GP	235 236
LIFTING GP-ENGINE	89 90 91

M

MANIFOLD GP-EXHAUST	153 154 155
MOUNTING GP-ENGINE OIL FILTER	128
MOUNTING GP-FAN	142
MUFFLER GP	156

P

PAN GP-OIL	92 94 96 98 100
PARTS GP-MISCELLANEOUS	102
PISTON & ROD GP	103 104
PLUG GP-ENGINE	105 106
PLUG GP-OIL PAN	108
PLUG GP-OIL PAN–ENGINE	107
PLUG-DRAIN (ENGINE OIL DRAIN)	108
PLUG-DRAIN (ENGINE OIL PAN)	107
PLUG-DRAIN (FUEL FILTER)	177
PLUG-DRAIN (WATER SEPARATOR)	204
PULLEY GP-AUXILIARY DRIVE	109
PULLEY GP-CRANKSHAFT	110 111
PULLEY GP-WATER PUMP	112 113
PUMP & MTG GP-FUEL TRANSFER	183
PUMP AS-FUEL TRANSFER	206 209 213
PUMP GP-ENGINE OIL	129 132
PUMP GP-FILTER & FUEL TRANSFER	184
PUMP GP-FUEL INJECTION	187 188 190 192 194 196

INDEX

Name	Page
	198
	199
	201
PUMP GP-FUEL PRIMING	203
	204
PUMP GP-FUEL PRM & PRIM FILTER	204
PUMP GP-FUEL TRANSFER	206
	209
	211
	213
PUMP GP-WATER	143
	146
	148
R	
REGULATOR-WATER TEMPERATURE	143
	146
	148
S	
SEAL (ENGINE OIL FILL CAP)	123
	125
SEAL (ENGINE OIL FILL)	125
SEAL-VALVE COVER	35
	37
	157
	161
SENSOR-SPEED (ENGINE TIMING)	165
	179
	181
SENSOR-SPEED (ENGINE)	173
SENSOR-SPEED (TIMING, CAMSHAFT)	167
SHUTOFF GP-ELECTRICAL	224
SOLENOID (FUEL SHUTOFF)	225
SOLENOID (STARTING MOTOR)	226
SOLENOID GP-SHUTOFF–FUEL	225
STARTING MOTOR GP-ELECTRIC	226
	228
	229
SWITCH AS-START	232
SWITCH GP-PRESSURE–ENGINE OIL	230
	231
SWITCH GP-START	232
SWITCH GP-TEMPERATURE–COOLANT	233
SWITCH-PRESSURE (ENGINE OIL)	230
	231
SWITCH-TEMPERATURE (ENGINE COOLANT)	233
	234
T	
TURBOCHARGER GP	157
	161
V	
V-BELT	115
V-BELT (WATER PUMP)	114
	116
V-BELT GP	7
	12
	18
	115
	116
V-BELT GP–FAN DRIVE	114
VALVE MECHANISM GP	117
	118
	120
VALVE-BREATHER (CRANKCASE)	35
	37
	157
	161
VALVE-RELIEF (ENGINE OIL PRESSURE)	129
	132

ENGINE ARRANGEMENT

302-1819 ENGINE AR

37 BRAKE KW (50 BHP) AT 2800 RPM

SMCS-1000 **i02851835**

NOTE	PART NUMBER	QTY	PART NAME 1 2 3 4 5 6 (PRODUCT LEVEL)	SEE PAGE
Y	*308-2305*	1	ALTERNATOR GP-CHARGING	215
Y	*308-2306*	1	V-BELT GP (FAN DRIVE)	114
Y	*309-6718*	1	HOUSING GP-FRONT	71
Y	*308-2319*	1	CONNECTION GP-ELECTRICAL	217
Y	*308-4735*	1	MOUNTING GP-ENGINE OIL FILTER	128
Y	*308-2302*	1	CONNECTION GP-WATER	135
Y	*308-2313*	1	CONTROL GP-MANUAL START/STOP	219
Y	*317-0590*	1	COVER GP-VALVE MECHANISM	37
Y	*309-6713*	1	CRANKSHAFT GP	41
Y	*309-6712*	1	CYLINDER BLOCK GP	45
Y	*309-6715*	1	CYLINDER HEAD GP	51
Y	*308-2304*	1	DRIVE GP-FAN	54
Y	*308-2303*	1	FAN GP-SUCTION	139
Y	*308-2297*	1	FILLER GP-ENGINE OIL	123
Y	*308-2298*	1	FILTER GP-ENGINE OIL	127
Y	*317-0586*	1	FLYWHEEL GP	59
Y	*308-2311*	1	GLOW PLUG GP	222
Y	*317-0588*	1	HOUSING GP-FLYWHEEL	65
Y	*308-2321*	1	LAMP GP	235
Y	*309-6725*	1	LIFTING GP-ENGINE	90
Y	*309-6724*	1	MANIFOLD GP-EXHAUST	153
Y	*308-2295*	1	PAN GP-OIL	92
Y	*309-6714*	1	PISTON & ROD GP	104
Y	*308-2307*	1	COVER GP-FRONT HOUSING	33
Y	*309-6720*	1	PLUG GP-OIL PAN	107
Y	*308-2300*	1	PULLEY GP-CRANKSHAFT	110
Y	*308-2294*	1	PULLEY GP-WATER PUMP	112
Y	*308-2310*	1	PUMP GP-FILTER & FUEL TRANSFER	184
Y	*309-6719*	1	PUMP GP-FUEL INJECTION	192
Y	*308-2320*	1	PUMP GP-FUEL PRIMING	203
Y	*309-6717*	1	PUMP GP-ENGINE OIL	132
Y	*309-6721*	1	PUMP GP-WATER	146
Y	*308-2293*	1	STARTING MOTOR GP-ELECTRIC	228
Y	*308-2312*	1	SWITCH GP-PRESSURE	230
Y	*308-2314*	1	SWITCH GP-START	232
Y	*308-2317*	1	SWITCH GP-TEMPERATURE (ENGINE COOLANT)	233
Y	*309-6716*	1	VALVE MECHANISM GP	120

Y-SEPARATE ILLUSTRATION

ENGINE ARRANGEMENT

317-4987 ENGINE AR

24 BRAKE KW (33 BHP) AT 1770 RPM

SMCS-1000 **i02959989**

NOTE	PART NUMBER	QTY	PART NAME 1 2 3 4 5 6 (PRODUCT LEVEL)	SEE PAGE
Y	*308-2305*	1	ALTERNATOR GP-CHARGING	215
Y	*325-5663*	1	CAMSHAFT GP	24
Y	*308-2302*	1	CONNECTION GP-WATER	135
Y	*325-5662*	1	CONTROL GP-GOVERNOR	167
Y	*308-2313*	1	CONTROL GP-MANUAL START/STOP	219
Y	*317-0590*	1	COVER GP-VALVE MECHANISM	37
Y	*308-2307*	1	COVER GP-FRONT HOUSING	33
Y	*309-6713*	1	CRANKSHAFT GP	41
Y	*309-6712*	1	CYLINDER BLOCK GP	45
Y	*309-6715*	1	CYLINDER HEAD GP	51
Y	*325-5669*	1	DRIVE GP-FAN	56
Y	*319-1623*	1	FAN GP-BLOWER	138
Y	*308-2297*	1	FILLER GP-ENGINE OIL	123
Y	*308-2298*	1	FILTER GP-ENGINE OIL	127
Y	*325-5671*	1	FILTER GP-FUEL	178
Y	*325-5668*	1	FLYWHEEL GP	61
Y	*308-2311*	1	GLOW PLUG GP	222
Y	*325-5661*	1	HOUSING GP-FRONT	85
Y	*325-5667*	1	HOUSING GP-FRONT	86
Y	*309-6725*	1	LIFTING GP-ENGINE	90
Y	*309-6724*	1	MANIFOLD GP-EXHAUST	153
Y	*315-5256*	1	MANIFOLD GP-EXHAUST	154
Y	*308-4735*	1	MOUNTING GP-ENGINE OIL FILTER	128
Y	*308-2295*	1	PAN GP-OIL	92
Y	*309-6714*	1	PISTON & ROD GP	104
Y	*309-6720*	1	PLUG GP-OIL PAN	107
Y	*308-2300*	1	PULLEY GP-CRANKSHAFT	110
Y	*308-2294*	1	PULLEY GP-WATER PUMP	112
Y	*309-6717*	1	PUMP GP-ENGINE OIL	132
Y	*325-5665*	1	PUMP GP-FUEL INJECTION	199
Y	*325-5670*	1	PUMP GP-FUEL TRANSFER	209
Y	*309-6721*	1	PUMP GP-WATER	146
Y	*308-2293*	1	STARTING MOTOR GP-ELECTRIC	228
Y	*315-7819*	1	SWITCH GP-PRESSURE	231
Y	*308-2317*	1	SWITCH GP-TEMPERATURE (ENGINE COOLANT)	233
Y	*308-2306*	1	V-BELT GP (FAN DRIVE)	114
Y	*309-6716*	1	VALVE MECHANISM GP	120

Y-SEPARATE ILLUSTRATION

ENGINE ARRANGEMENT

318-8442 ENGINE AR

37 BRAKE KW (50 BHP) AT 2800 RPM

SMCS-1000 **i03152588**

NOTE	PART NUMBER	QTY	PART NAME 1 2 3 4 5 6 (PRODUCT LEVEL)	SEE PAGE
Y	*308-2305*	1	ALTERNATOR GP-CHARGING	215
Y	*308-2309*	1	CONNECTION GP-EXHAUST	151
Y	*308-2302*	1	CONNECTION GP-WATER	135
Y	*308-2313*	1	CONTROL GP-MANUAL START/STOP	219
Y	*317-0590*	1	COVER GP-VALVE MECHANISM	37
Y	*308-2307*	1	COVER GP-FRONT HOUSING	33
Y	*309-6713*	1	CRANKSHAFT GP	41
Y	*309-6712*	1	CYLINDER BLOCK GP	45
Y	*309-6715*	1	CYLINDER HEAD GP	51
Y	*311-1119*	1	DRIVE GP-FAN	55
Y	*308-2297*	1	FILLER GP-ENGINE OIL	123
Y	*308-2298*	1	FILTER GP-ENGINE OIL	127
Y	*308-2291*	1	FLYWHEEL GP	57
Y	*308-2311*	1	GLOW PLUG GP	222
Y	*308-2290*	1	HOUSING GP-FLYWHEEL	63
Y	*309-6718*	1	HOUSING GP-FRONT	71
Y	*308-2321*	1	LAMP GP	235
Y	*309-6725*	1	LIFTING GP-ENGINE	90
Y	*317-7192*	1	MANIFOLD GP-EXHAUST	155
Y	*308-4735*	1	MOUNTING GP-ENGINE OIL FILTER	128
Y	*322-2416*	1	PAN GP-OIL	98
Y	*309-6714*	1	PISTON & ROD GP	104
Y	*322-2420*	1	PLUG GP-OIL PAN	108
Y	*308-2300*	1	PULLEY GP-CRANKSHAFT	110
Y	*311-9027*	1	PULLEY GP-WATER PUMP	113
Y	*309-6717*	1	PUMP GP-ENGINE OIL	132
Y	*308-2310*	1	PUMP GP-FILTER & FUEL TRANSFER	184
Y	*309-6719*	1	PUMP GP-FUEL INJECTION	192
Y	*309-6721*	1	PUMP GP-WATER	146
Y	*308-2293*	1	STARTING MOTOR GP-ELECTRIC	228
Y	*315-7819*	1	SWITCH GP-PRESSURE	231
Y	*308-2317*	1	SWITCH GP-TEMPERATURE (ENGINE COOLANT)	233
Y	*311-9029*	1	V-BELT GP	115
Y	*309-6716*	1	VALVE MECHANISM GP	120

Y-SEPARATE ILLUSTRATION

ENGINE ARRANGEMENT

301-2947 ENGINE AR-PRIMARY

45 BRAKE KW (60 BHP) AT 2800 RPM

SMCS-1000 **i03126202**

NOTE	PART NUMBER	QTY	PART NAME 1 2 3 4 5 6 (PRODUCT LEVEL)	SEE PAGE
Y	*308-2305*	1	ALTERNATOR GP-CHARGING	215
Y	*329-9278*	1	CAMSHAFT GP	27
Y	*308-2319*	1	CONNECTION GP-ELECTRICAL	217
Y	*308-2309*	1	CONNECTION GP-EXHAUST	151
Y	*308-2299*	1	CONNECTION GP-OIL	122
Y	*308-2302*	1	CONNECTION GP-WATER	135
Y	*329-9277*	1	CONTROL GP-GOVERNOR	171
Y	*308-2313*	1	CONTROL GP-MANUAL START/STOP	219
Y	*308-2307*	1	COVER GP-FRONT HOUSING	33
Y	*308-2283*	1	CRANKSHAFT GP	39
Y	*308-2281*	1	CYLINDER BLOCK GP	43
Y	*308-2284*	1	CYLINDER HEAD GP	49
Y	*308-2304*	1	DRIVE GP-FAN	54
Y	*308-2303*	1	FAN GP-SUCTION	139
Y	*308-2297*	1	FILLER GP-ENGINE OIL	123
Y	*308-2298*	1	FILTER GP-ENGINE OIL	127
Y	*308-2291*	1	FLYWHEEL GP	57
Y	*308-2311*	1	GLOW PLUG GP	222
Y	*308-2290*	1	HOUSING GP-FLYWHEEL	63
Y	*308-2288*	1	HOUSING GP-FRONT	66
Y	*308-2321*	1	LAMP GP	235
Y	*308-2315*	1	LIFTING GP-ENGINE	89
			—OR—	
Y	*309-6725*	1	LIFTING GP-ENGINE	90
Y	*308-2295*	1	PAN GP-OIL	92
Y	*308-2286*	1	PISTON & ROD GP	103
Y	*309-6720*	1	PLUG GP-OIL PAN	107
Y	*321-6740*	1	PULLEY GP-CRANKSHAFT	111
Y	*308-2294*	1	PULLEY GP-WATER PUMP	112
Y	*308-2287*	1	PUMP GP-ENGINE OIL	129
Y	*308-2310*	1	PUMP GP-FILTER & FUEL TRANSFER	184
Y	*308-2289*	1	PUMP GP-FUEL INJECTION	188
Y	*308-2320*	1	PUMP GP-FUEL PRIMING	203
Y	*308-2301*	1	PUMP GP-WATER	143
Y	*308-2293*	1	STARTING MOTOR GP-ELECTRIC	228
Y	*308-2312*	1	SWITCH GP-PRESSURE	230
Y	*308-2314*	1	SWITCH GP-START	232
Y	*308-2317*	1	SWITCH GP-TEMPERATURE (ENGINE COOLANT)	233
Y	*308-2308*	1	TURBOCHARGER GP	157
Y	*308-2285*	1	VALVE MECHANISM GP	118
Y	*308-2306*	1	V-BELT GP (FAN DRIVE)	114

Y-SEPARATE ILLUSTRATION

ENGINE ARRANGEMENT

301-2948 ENGINE AR-PRIMARY

49 BRAKE KW (66 BHP) AT 2800 RPM

SMCS-1000 **i02943223**

NOTE	PART NUMBER	QTY	PART NAME 1 2 3 4 5 6 (PRODUCT LEVEL)	SEE PAGE
Y	*308-2305*	1	ALTERNATOR GP-CHARGING	215
Y	*308-2306*	1	V-BELT GP (FAN DRIVE)	114
Y	*308-3329*	1	HOUSING GP-FRONT	67
Y	*308-2319*	1	CONNECTION GP-ELECTRICAL	217
Y	*308-2309*	1	CONNECTION GP-EXHAUST	151
Y	*308-2299*	1	CONNECTION GP-OIL	122
Y	*308-2313*	1	CONTROL GP-MANUAL START/STOP	219
Y	*308-2283*	1	CRANKSHAFT GP	39
Y	*308-2281*	1	CYLINDER BLOCK GP	43
Y	*308-2284*	1	CYLINDER HEAD GP	49
Y	*308-2304*	1	DRIVE GP-FAN	54
Y	*308-2303*	1	FAN GP-SUCTION	139
Y	*308-2297*	1	FILLER GP-ENGINE OIL	123
Y	*308-2298*	1	FILTER GP-ENGINE OIL	127
Y	*308-2291*	1	FLYWHEEL GP	57
Y	*308-2311*	1	GLOW PLUG GP	222
Y	*308-2290*	1	HOUSING GP-FLYWHEEL	63
Y	*308-2321*	1	LAMP GP	235
Y	*308-2315*	1	LIFTING GP-ENGINE	89
			—OR—	
Y	*309-6725*	1	LIFTING GP-ENGINE	90
Y	*308-2295*	1	PAN GP-OIL	92
Y	*308-2286*	1	PISTON & ROD GP	103
Y	*308-2307*	1	COVER GP-FRONT HOUSING	33
Y	*309-6720*	1	PLUG GP-OIL PAN	107
Y	*321-6740*	1	PULLEY GP-CRANKSHAFT	111
Y	*308-2294*	1	PULLEY GP-WATER PUMP	112
Y	*308-2287*	1	PUMP GP-ENGINE OIL	129
Y	*308-2310*	1	PUMP GP-FILTER & FUEL TRANSFER	184
Y	*308-3330*	1	PUMP GP-FUEL INJECTION	190
Y	*308-2320*	1	PUMP GP-FUEL PRIMING	203
Y	*308-2293*	1	STARTING MOTOR GP-ELECTRIC	228
Y	*308-2312*	1	SWITCH GP-PRESSURE	230
Y	*308-2314*	1	SWITCH GP-START	232
Y	*308-2317*	1	SWITCH GP-TEMPERATURE (ENGINE COOLANT)	233
Y	*308-2308*	1	TURBOCHARGER GP	157
Y	*308-2285*	1	VALVE MECHANISM GP	118

Y-SEPARATE ILLUSTRATION

ENGINE ARRANGEMENT

302-1820 ENGINE AR-PRIMARY

37 BRAKE KW (50 BHP) AT 2800 RPM

SMCS-1000 **i02883833**

NOTE	PART NUMBER	QTY	PART NAME 1 2 3 4 5 6 (PRODUCT LEVEL)	SEE PAGE
Y	*308-2305*	1	ALTERNATOR GP-CHARGING	215
Y	*309-6718*	1	HOUSING GP-FRONT	71
Y	*308-2319*	1	CONNECTION GP-ELECTRICAL	217
Y	*308-2309*	1	CONNECTION GP-EXHAUST	151
Y	*308-2302*	1	CONNECTION GP-WATER	135
Y	*308-2313*	1	CONTROL GP-MANUAL START/STOP	219
Y	*317-0590*	1	COVER GP-VALVE MECHANISM	37
Y	*308-2307*	1	COVER GP-FRONT HOUSING	33
Y	*309-6713*	1	CRANKSHAFT GP	41
Y	*309-6712*	1	CYLINDER BLOCK GP	45
Y	*309-6715*	1	CYLINDER HEAD GP	51
Y	*308-2304*	1	DRIVE GP-FAN	54
Y	*308-2303*	1	FAN GP-SUCTION	139
Y	*308-2297*	1	FILLER GP-ENGINE OIL	123
Y	*308-2298*	1	FILTER GP-ENGINE OIL	127
Y	*308-2291*	1	FLYWHEEL GP	57
Y	*308-2311*	1	GLOW PLUG GP	222
Y	*308-2290*	1	HOUSING GP-FLYWHEEL	63
Y	*308-2321*	1	LAMP GP	235
Y	*309-6725*	1	LIFTING GP-ENGINE	90
Y	*309-6724*	1	MANIFOLD GP-EXHAUST	153
Y	*308-4735*	1	MOUNTING GP-ENGINE OIL FILTER	128
Y	*308-2295*	1	PAN GP-OIL	92
Y	*309-6714*	1	PISTON & ROD GP	104
Y	*309-6720*	1	PLUG GP-OIL PAN	107
Y	*308-2300*	1	PULLEY GP-CRANKSHAFT	110
Y	*308-2294*	1	PULLEY GP-WATER PUMP	112
Y	*308-2310*	1	PUMP GP-FILTER & FUEL TRANSFER	184
Y	*309-6719*	1	PUMP GP-FUEL INJECTION	192
Y	*308-2320*	1	PUMP GP-FUEL PRIMING	203
Y	*309-6717*	1	PUMP GP-ENGINE OIL	132
Y	*309-6721*	1	PUMP GP-WATER	146
Y	*308-2293*	1	STARTING MOTOR GP-ELECTRIC	228
Y	*308-2312*	1	SWITCH GP-PRESSURE	230
Y	*308-2314*	1	SWITCH GP-START	232
Y	*308-2317*	1	SWITCH GP-TEMPERATURE (ENGINE COOLANT)	233
Y	*308-2306*	1	V-BELT GP (FAN DRIVE)	114
Y	*309-6716*	1	VALVE MECHANISM GP	120

Y-SEPARATE ILLUSTRATION

ENGINE ARRANGEMENT

306-9226 ENGINE AR-PRIMARY

45 BRAKE KW (60 BHP) AT 2800 RPM

SMCS-1000 **i03090232**

NOTE	PART NUMBER	QTY	PART NAME 1 2 3 4 5 6 (PRODUCT LEVEL)	SEE PAGE
Y	*308-2305*	1	ALTERNATOR GP-CHARGING	215
Y	*329-9278*	1	CAMSHAFT GP	27
Y	*308-5610*	1	CONNECTION GP-EXHAUST	152
Y	*308-2299*	1	CONNECTION GP-OIL	122
Y	*308-2302*	1	CONNECTION GP-WATER	135
Y	*329-9277*	1	CONTROL GP-GOVERNOR	171
Y	*308-2313*	1	CONTROL GP-MANUAL START/STOP	219
Y	*308-2307*	1	COVER GP-FRONT HOUSING	33
Y	*308-2283*	1	CRANKSHAFT GP	39
Y	*308-2281*	1	CYLINDER BLOCK GP	43
Y	*308-2284*	1	CYLINDER HEAD GP	49
Y	*308-2304*	1	DRIVE GP-FAN	54
Y	*308-2303*	1	FAN GP-SUCTION	139
Y	*308-2297*	1	FILLER GP-ENGINE OIL	123
Y	*308-2298*	1	FILTER GP-ENGINE OIL	127
Y	*322-2412*	1	FLYWHEEL GP	60
Y	*308-2311*	1	GLOW PLUG GP	222
Y	*311-1883*	1	HOUSING GP-FLYWHEEL	64
Y	*308-2288*	1	HOUSING GP-FRONT	66
Y	*308-2321*	1	LAMP GP	235
Y	*309-6725*	1	LIFTING GP-ENGINE	90
Y	*311-1886*	1	PAN GP-OIL	94
Y	*308-2286*	1	PISTON & ROD GP	103
Y	*309-6720*	1	PLUG GP-OIL PAN	107
Y	*321-6740*	1	PULLEY GP-CRANKSHAFT	111
Y	*311-9027*	1	PULLEY GP-WATER PUMP	113
Y	*308-2287*	1	PUMP GP-ENGINE OIL	129
Y	*308-2310*	1	PUMP GP-FILTER & FUEL TRANSFER	184
Y	*308-2289*	1	PUMP GP-FUEL INJECTION	188
Y	*308-2320*	1	PUMP GP-FUEL PRIMING	203
Y	*317-0979*	1	PUMP GP-WATER	148
Y	*308-2293*	1	STARTING MOTOR GP-ELECTRIC	228
Y	*315-7819*	1	SWITCH GP-PRESSURE	231
Y	*308-2314*	1	SWITCH GP-START	232
Y	*308-2317*	1	SWITCH GP-TEMPERATURE (ENGINE COOLANT)	233
Y	*308-2308*	1	TURBOCHARGER GP	157
Y	*311-9029*	1	V-BELT GP	115
Y	*308-2285*	1	VALVE MECHANISM GP	118

Y-SEPARATE ILLUSTRATION

ENGINE ARRANGEMENT

307-9833 ENGINE AR-PRIMARY

37 BRAKE KW (50 BHP) AT 2800 RPM

SMCS-1000 **i03187205**

NOTE	PART NUMBER	QTY	PART NAME 1 2 3 4 5 6 (PRODUCT LEVEL)	SEE PAGE
Y	*308-2305*	1	ALTERNATOR GP-CHARGING	215
Y	*308-2309*	1	CONNECTION GP-EXHAUST	151
Y	*308-2302*	1	CONNECTION GP-WATER	135
Y	*308-2313*	1	CONTROL GP-MANUAL START/STOP	219
Y	*317-0590*	1	COVER GP-VALVE MECHANISM	37
Y	*308-2307*	1	COVER GP-FRONT HOUSING	33
Y	*309-6713*	1	CRANKSHAFT GP	41
Y	*309-6712*	1	CYLINDER BLOCK GP	45
Y	*309-6715*	1	CYLINDER HEAD GP	51
Y	*308-2304*	1	DRIVE GP-FAN	54
Y	*308-2303*	1	FAN GP-SUCTION	139
Y	*308-2297*	1	FILLER GP-ENGINE OIL	123
Y	*308-2298*	1	FILTER GP-ENGINE OIL	127
Y	*308-2291*	1	FLYWHEEL GP	57
Y	*308-2311*	1	GLOW PLUG GP	222
Y	*308-2290*	1	HOUSING GP-FLYWHEEL	63
Y	*309-6718*	1	HOUSING GP-FRONT	71
Y	*309-6725*	1	LIFTING GP-ENGINE	90
Y	*309-6724*	1	MANIFOLD GP-EXHAUST	153
Y	*308-4735*	1	MOUNTING GP-ENGINE OIL FILTER	128
Y	*311-1886*	1	PAN GP-OIL	94
Y	*309-6714*	1	PISTON & ROD GP	104
Y	*309-6720*	1	PLUG GP-OIL PAN	107
Y	*308-2300*	1	PULLEY GP-CRANKSHAFT	110
Y	*308-2294*	1	PULLEY GP-WATER PUMP	112
Y	*315-7814*	1	PUMP & MTG GP-FUEL TRANSFER	183
Y	*309-6717*	1	PUMP GP-ENGINE OIL	132
Y	*309-6719*	1	PUMP GP-FUEL INJECTION	192
Y	*309-6721*	1	PUMP GP-WATER	146
Y	*308-2293*	1	STARTING MOTOR GP-ELECTRIC	228
Y	*315-7819*	1	SWITCH GP-PRESSURE	231
Y	*308-2317*	1	SWITCH GP-TEMPERATURE (ENGINE COOLANT)	233
Y	*308-2306*	1	V-BELT GP (FAN DRIVE)	114
Y	*309-6716*	1	VALVE MECHANISM GP	120

Y-SEPARATE ILLUSTRATION

ENGINE ARRANGEMENT

307-9834 ENGINE AR-PRIMARY

37 BRAKE KW (50 BHP) AT 2800 RPM

SMCS-1000 **i02911713**

NOTE	PART NUMBER	QTY	PART NAME 1 2 3 4 5 6 (PRODUCT LEVEL)	SEE PAGE
Y	*308-2313*	1	CONTROL GP-MANUAL START/STOP	219
Y	*317-0590*	1	COVER GP-VALVE MECHANISM	37
Y	*308-2307*	1	COVER GP-FRONT HOUSING	33
Y	*309-6713*	1	CRANKSHAFT GP	41
Y	*309-6712*	1	CYLINDER BLOCK GP	45
Y	*309-6715*	1	CYLINDER HEAD GP	51
Y	*308-2304*	1	DRIVE GP-FAN	54
Y	*308-2303*	1	FAN GP-SUCTION	139
Y	*308-2297*	1	FILLER GP-ENGINE OIL	123
Y	*308-2298*	1	FILTER GP-ENGINE OIL	127
Y	*311-1884*	1	FLYWHEEL GP	58
Y	*308-2311*	1	GLOW PLUG GP	222
Y	*311-1883*	1	HOUSING GP-FLYWHEEL	64
Y	*309-6718*	1	HOUSING GP-FRONT	71
Y	*317-0980*	1	HOUSING GP-WATER REGULATOR	140
Y	*308-2321*	1	LAMP GP	235
Y	*309-6725*	1	LIFTING GP-ENGINE	90
Y	*309-6724*	1	MANIFOLD GP-EXHAUST	153
Y	*308-4735*	1	MOUNTING GP-ENGINE OIL FILTER	128
Y	*311-1886*	1	PAN GP-OIL	94
Y	*309-6714*	1	PISTON & ROD GP	104
Y	*309-6720*	1	PLUG GP-OIL PAN	107
Y	*308-2300*	1	PULLEY GP-CRANKSHAFT	110
Y	*308-2294*	1	PULLEY GP-WATER PUMP	112
Y	*309-6717*	1	PUMP GP-ENGINE OIL	132
Y	*308-2310*	1	PUMP GP-FILTER & FUEL TRANSFER	184
Y	*309-6719*	1	PUMP GP-FUEL INJECTION	192
Y	*308-2320*	1	PUMP GP-FUEL PRIMING	203
Y	*309-6721*	1	PUMP GP-WATER	146
Y	*315-7819*	1	SWITCH GP-PRESSURE	231
Y	*308-2314*	1	SWITCH GP-START	232
Y	*308-2317*	1	SWITCH GP-TEMPERATURE (ENGINE COOLANT)	233
Y	*309-6716*	1	VALVE MECHANISM GP	120

Y-SEPARATE ILLUSTRATION

ENGINE ARRANGEMENT

310-1532 ENGINE AR-PRIMARY

45 BRAKE KW (60 BHP) AT 2800 RPM

SMCS-1000 **i03259307**

NOTE	PART NUMBER	QTY	PART NAME 1 2 3 4 5 6 (PRODUCT LEVEL)	SEE PAGE
Y	*317-3038*	1	ALTERNATOR GP-CHARGING	216
Y	*323-9147*	1	CAMSHAFT GP	23
Y	*308-2299*	1	CONNECTION GP-OIL	122
Y	*308-2302*	1	CONNECTION GP-WATER	135
Y	*317-3041*	1	CONTROL GP-MANUAL START/STOP	220
Y	*308-2307*	1	COVER GP-FRONT HOUSING	33
Y	*308-2283*	1	CRANKSHAFT GP	39
Y	*308-2281*	1	CYLINDER BLOCK GP	43
Y	*308-2284*	1	CYLINDER HEAD GP	49
Y	*308-2304*	1	DRIVE GP-FAN	54
Y	*308-2303*	1	FAN GP-SUCTION	139
Y	*308-2297*	1	FILLER GP-ENGINE OIL	123
Y	*308-2298*	1	FILTER GP-ENGINE OIL	127
Y	*311-1884*	1	FLYWHEEL GP	58
Y	*317-3040*	1	GLOW PLUG GP	223
Y	*323-9146*	1	GOVERNOR GP	181
Y	*308-2290*	1	HOUSING GP-FLYWHEEL	63
Y	*323-9145*	1	HOUSING GP-FRONT	84
Y	*309-6725*	1	LIFTING GP-ENGINE	90
Y	*317-3037*	1	PAN GP-OIL	96
Y	*308-2286*	1	PISTON & ROD GP	103
Y	*309-6720*	1	PLUG GP-OIL PAN	107
Y	*321-6740*	1	PULLEY GP-CRANKSHAFT	111
Y	*308-2294*	1	PULLEY GP-WATER PUMP	112
Y	*308-2287*	1	PUMP GP-ENGINE OIL	129
Y	*308-2310*	1	PUMP GP-FILTER & FUEL TRANSFER	184
Y	*308-2289*	1	PUMP GP-FUEL INJECTION	188
Y	*308-2320*	1	PUMP GP-FUEL PRIMING	203
Y	*317-0979*	1	PUMP GP-WATER	148
Y	*317-3036*	1	STARTING MOTOR GP-ELECTRIC	229
Y	*308-2312*	1	SWITCH GP-PRESSURE	230
Y	*308-2317*	1	SWITCH GP-TEMPERATURE (ENGINE COOLANT)	233
Y	*308-2308*	1	TURBOCHARGER GP	157
Y	*317-3039*	1	V-BELT GP (WATER PUMP)	116
Y	*308-2285*	1	VALVE MECHANISM GP	118

Y-SEPARATE ILLUSTRATION

ENGINE ARRANGEMENT

310-7852 ENGINE AR-PRIMARY

45 BRAKE KW (60 BHP) AT 2800 RPM. TIER III

SMCS-1000 **i03202781**

NOTE	PART NUMBER	QTY	PART NAME 1 2 3 4 5 6 (PRODUCT LEVEL)	SEE PAGE
Y	*308-2305*	1	ALTERNATOR GP-CHARGING	215
Y	*323-9147*	1	CAMSHAFT GP	23
			—OR—	
Y	*329-9278*	1	CAMSHAFT GP	27
Y	*321-6741*	1	CONNECTION GP-ELECTRICAL	218
Y	*308-2309*	1	CONNECTION GP-EXHAUST	151
Y	*308-2299*	1	CONNECTION GP-OIL	122
Y	*308-2302*	1	CONNECTION GP-WATER	135
Y	*308-2313*	1	CONTROL GP-MANUAL START/STOP	219
Y	*308-2307*	1	COVER GP-FRONT HOUSING	33
Y	*308-2283*	1	CRANKSHAFT GP	39
Y	*308-2281*	1	CYLINDER BLOCK GP	43
Y	*308-2284*	1	CYLINDER HEAD GP	49
Y	*308-2297*	1	FILLER GP-ENGINE OIL	123
Y	*308-2298*	1	FILTER GP-ENGINE OIL	127
Y	*327-7632*	1	FLYWHEEL GP	62
Y	*308-2311*	1	GLOW PLUG GP	222
Y	*323-9146*	1	GOVERNOR GP	181
			—OR—	
Y	*329-9277*	1	CONTROL GP-GOVERNOR	171
Y	*317-0588*	1	HOUSING GP-FLYWHEEL	65
Y	*323-9145*	1	HOUSING GP-FRONT	84
			—OR—	
Y	*308-2288*	1	HOUSING GP-FRONT	66
Y	*309-6725*	1	LIFTING GP-ENGINE	90
Y	*315-7813*	1	MOUNTING GP-FAN	142
Y	*317-3037*	1	PAN GP-OIL	96
Y	*308-2286*	1	PISTON & ROD GP	103
Y	*309-6720*	1	PLUG GP-OIL PAN	107
Y	*321-6740*	1	PULLEY GP-CRANKSHAFT	111
Y	*311-9027*	1	PULLEY GP-WATER PUMP	113
Y	*308-2287*	1	PUMP GP-ENGINE OIL	129
Y	*308-2289*	1	PUMP GP-FUEL INJECTION	188
Y	*327-7633*	1	PUMP GP-FUEL TRANSFER	211
Y	*317-0979*	1	PUMP GP-WATER	148
Y	*308-2293*	1	STARTING MOTOR GP-ELECTRIC	228
Y	*315-7819*	1	SWITCH GP-PRESSURE	231
Y	*308-2317*	1	SWITCH GP-TEMPERATURE (ENGINE COOLANT)	233
Y	*308-2308*	1	TURBOCHARGER GP	157
Y	*311-9029*	1	V-BELT GP (WATER PUMP)	115
Y	*308-2285*	1	VALVE MECHANISM GP	118

Y-SEPARATE ILLUSTRATION

ENGINE ARRANGEMENT

311-2714 ENGINE AR-PRIMARY

34 BRAKE KW (46 BHP) AT 2400 RPM

SMCS-1000 **i02751987**

NOTE	PART NUMBER	QTY	PART NAME 1 2 3 4 5 6 (PRODUCT LEVEL)	SEE PAGE
Y	*308-2305*	1	ALTERNATOR GP-CHARGING	215
Y	*311-9029*	1	V-BELT GP	115
Y	*311-9025*	1	CAMSHAFT GP	21
Y	*308-4735*	1	MOUNTING GP-ENGINE OIL FILTER	128
Y	*308-2302*	1	CONNECTION GP-WATER	135
Y	*308-2313*	1	CONTROL GP-MANUAL START/STOP	219
Y	*309-6722*	1	COVER GP-VALVE MECHANISM	35
Y	*309-6713*	1	CRANKSHAFT GP	41
Y	*309-6712*	1	CYLINDER BLOCK GP	45
Y	*309-6715*	1	CYLINDER HEAD GP	51
Y	*308-2304*	1	DRIVE GP-FAN	54
Y	*308-2303*	1	FAN GP-SUCTION	139
Y	*308-2297*	1	FILLER GP-ENGINE OIL	123
Y	*308-5704*	1	FILTER GP-FUEL	177
Y	*308-2298*	1	FILTER GP-ENGINE OIL	127
Y	*308-2291*	1	FLYWHEEL GP	57
Y	*308-2311*	1	GLOW PLUG GP	222
Y	*311-9024*	1	GOVERNOR GP	179
Y	*308-2290*	1	HOUSING GP-FLYWHEEL	63
Y	*311-9023*	1	HOUSING GP-FRONT	81
Y	*311-9030*	1	INSTRUMENT GP	234
Y	*309-6725*	1	LIFTING GP-ENGINE	90
Y	*309-6724*	1	MANIFOLD GP-EXHAUST	153
Y	*311-1886*	1	PAN GP-OIL	94
Y	*309-6714*	1	PISTON & ROD GP	104
Y	*308-2307*	1	COVER GP-FRONT HOUSING	33
Y	*309-6720*	1	PLUG GP-OIL PAN	107
Y	*308-2300*	1	PULLEY GP-CRANKSHAFT	110
Y	*311-9027*	1	PULLEY GP-WATER PUMP	113
Y	*311-9026*	1	PUMP GP-FUEL INJECTION	196
Y	*311-9028*	1	PUMP GP-FUEL TRANSFER	206
Y	*309-6717*	1	PUMP GP-ENGINE OIL	132
Y	*309-6721*	1	PUMP GP-WATER	146
Y	*308-2293*	1	STARTING MOTOR GP-ELECTRIC	228
Y	*308-2312*	1	SWITCH GP-PRESSURE	230
Y	*309-6716*	1	VALVE MECHANISM GP	120

Y-SEPARATE ILLUSTRATION

ENGINE ARRANGEMENT

311-3840 ENGINE AR-PRIMARY

36 BRAKE KW (48 BHP) AT 2600 RPM

SMCS-1000 **i02853689**

NOTE	PART NUMBER	QTY	PART NAME 1 2 3 4 5 6 (PRODUCT LEVEL)	SEE PAGE
Y	*308-2305*	1	ALTERNATOR GP-CHARGING	215
Y	*308-2306*	1	V-BELT GP (FAN DRIVE)	114
Y	*317-7188*	1	CAMSHAFT GP	22
Y	*317-7194*	1	CONNECTOR GP-CAB HEATER LINES	136
Y	*308-4735*	1	MOUNTING GP-ENGINE OIL FILTER	128
Y	*317-7187*	1	CONTROL GP-GOVERNOR	165
Y	*315-7817*	1	SOLENOID GP-SHUTOFF	225
Y	*309-6722*	1	COVER GP-VALVE MECHANISM	35
Y	*309-6713*	1	CRANKSHAFT GP	41
Y	*309-6712*	1	CYLINDER BLOCK GP	45
Y	*309-6715*	1	CYLINDER HEAD GP	51
Y	*308-2304*	1	DRIVE GP-FAN	54
Y	*308-2303*	1	FAN GP-SUCTION	139
Y	*308-2297*	1	FILLER GP-ENGINE OIL	123
Y	*308-2298*	1	FILTER GP-ENGINE OIL	127
Y	*308-2291*	1	FLYWHEEL GP	57
Y	*308-2311*	1	GLOW PLUG GP	222
Y	*308-2290*	1	HOUSING GP-FLYWHEEL	63
Y	*317-7186*	1	HOUSING GP-FRONT	82
Y	*317-7191*	1	HOUSING GP-WATER REGULATOR	141
Y	*308-2321*	1	LAMP GP	235
Y	*309-6725*	1	LIFTING GP-ENGINE	90
Y	*317-7192*	1	MANIFOLD GP-EXHAUST	155
Y	*317-7193*	1	MUFFLER GP	156
Y	*308-2295*	1	PAN GP-OIL	92
Y	*309-6714*	1	PISTON & ROD GP	104
Y	*308-2307*	1	COVER GP-FRONT HOUSING	33
Y	*309-6720*	1	PLUG GP-OIL PAN	107
Y	*308-2300*	1	PULLEY GP-CRANKSHAFT	110
Y	*308-2294*	1	PULLEY GP-WATER PUMP	112
Y	*308-2310*	1	PUMP GP-FILTER & FUEL TRANSFER	184
Y	*317-7190*	1	PUMP GP-FUEL INJECTION	198
Y	*317-6706*	1	PUMP GP-FUEL PRM & PRIM FILTER	204
Y	*309-6717*	1	PUMP GP-ENGINE OIL	132
Y	*309-6721*	1	PUMP GP-WATER	146
Y	*308-2293*	1	STARTING MOTOR GP-ELECTRIC	228
Y	*315-7819*	1	SWITCH GP-PRESSURE	231
Y	*308-2317*	1	SWITCH GP-TEMPERATURE (ENGINE COOLANT)	233
Y	*309-6716*	1	VALVE MECHANISM GP	120

Y-SEPARATE ILLUSTRATION

ENGINE ARRANGEMENT

318-8497 ENGINE AR-PRIMARY

45 BRAKE KW (60 BHP) AT 2800 RPM

SMCS-1000 **i03071305**

NOTE	PART NUMBER	QTY	PART NAME 1 2 3 4 5 6 (PRODUCT LEVEL)	SEE PAGE
Y	*308-2305*	1	ALTERNATOR GP-CHARGING	215
Y	*323-9147*	1	CAMSHAFT GP	23
Y	*308-2319*	1	CONNECTION GP-ELECTRICAL	217
Y	*308-2299*	1	CONNECTION GP-OIL	122
Y	*308-2302*	1	CONNECTION GP-WATER	135
Y	*308-2313*	1	CONTROL GP-MANUAL START/STOP	219
Y	*308-2307*	1	COVER GP-FRONT HOUSING	33
Y	*308-2283*	1	CRANKSHAFT GP	39
Y	*308-2281*	1	CYLINDER BLOCK GP	43
Y	*308-2284*	1	CYLINDER HEAD GP	49
Y	*308-2304*	1	DRIVE GP-FAN	54
Y	*308-2303*	1	FAN GP-SUCTION	139
Y	*308-2297*	1	FILLER GP-ENGINE OIL	123
Y	*308-2298*	1	FILTER GP-ENGINE OIL	127
Y	*317-0586*	1	FLYWHEEL GP	59
Y	*308-2311*	1	GLOW PLUG GP	222
Y	*323-9146*	1	GOVERNOR GP	181
Y	*317-0588*	1	HOUSING GP-FLYWHEEL	65
Y	*308-2288*	1	HOUSING GP-FRONT	66
Y	*308-2321*	1	LAMP GP	235
Y	*309-6725*	1	LIFTING GP-ENGINE	90
Y	*317-3037*	1	PAN GP-OIL	96
Y	*308-2286*	1	PISTON & ROD GP	103
Y	*309-6720*	1	PLUG GP-OIL PAN	107
Y	*321-6740*	1	PULLEY GP-CRANKSHAFT	111
Y	*308-2294*	1	PULLEY GP-WATER PUMP	112
Y	*308-2287*	1	PUMP GP-ENGINE OIL	129
Y	*308-2310*	1	PUMP GP-FILTER & FUEL TRANSFER	184
Y	*308-2289*	1	PUMP GP-FUEL INJECTION	188
Y	*317-6706*	1	PUMP GP-FUEL PRM & PRIM FILTER	204
Y	*317-0979*	1	PUMP GP-WATER	148
Y	*320-9114*	1	SHUTOFF GP-ELECTRICAL	224
Y	*308-2293*	1	STARTING MOTOR GP-ELECTRIC	228
Y	*308-2312*	1	SWITCH GP-PRESSURE	230
Y	*308-2314*	1	SWITCH GP-START	232
Y	*308-2317*	1	SWITCH GP-TEMPERATURE (ENGINE COOLANT)	233
Y	*308-2308*	1	TURBOCHARGER GP	157
Y	*308-2306*	1	V-BELT GP (FAN DRIVE)	114
Y	*308-2285*	1	VALVE MECHANISM GP	118

Y-SEPARATE ILLUSTRATION

ENGINE ARRANGEMENT

321-6711 ENGINE AR-PRIMARY

43 BRAKE KW (58 BHP) AT 2600 RPM

SMCS-1000 **i03169121**

NOTE	PART NUMBER	QTY	PART NAME 1 2 3 4 5 6 (PRODUCT LEVEL)	SEE PAGE
Y	*308-2305*	1	ALTERNATOR GP-CHARGING	215
Y	*331-0216*	1	CAMSHAFT GP	29
Y	*321-6741*	1	CONNECTION GP-ELECTRICAL	218
Y	*308-2299*	1	CONNECTION GP-OIL	122
Y	*308-2302*	1	CONNECTION GP-WATER	135
Y	*322-2427*	1	CONNECTOR GP-CAB HEATER LINES	137
Y	*331-0215*	1	CONTROL GP-GOVERNOR	173
Y	*308-2313*	1	CONTROL GP-MANUAL START/STOP	219
Y	*308-2283*	1	CRANKSHAFT GP	39
Y	*308-2281*	1	CYLINDER BLOCK GP	43
Y	*308-2284*	1	CYLINDER HEAD GP	49
Y	*325-5669*	1	DRIVE GP-FAN	56
Y	*328-3296*	1	DRIVE GP-FRONT	53
Y	*322-2421*	1	FILLER GP-ENGINE OIL	125
Y	*308-2298*	1	FILTER GP-ENGINE OIL	127
Y	*322-2412*	1	FLYWHEEL GP	60
Y	*308-2311*	1	GLOW PLUG GP	222
Y	*311-1883*	1	HOUSING GP-FLYWHEEL	64
Y	*331-0214*	1	HOUSING GP-FRONT	87
Y	*309-6725*	1	LIFTING GP-ENGINE	90
Y	*315-5256*	1	MANIFOLD GP-EXHAUST	154
Y	*322-2416*	1	PAN GP-OIL	98
Y	*328-3297*	1	PARTS GP-MISCELLANEOUS	102
Y	*308-2286*	1	PISTON & ROD GP	103
Y	*322-2426*	1	PLUG GP-ENGINE	105
Y	*322-2420*	1	PLUG GP-OIL PAN	108
Y	*322-2422*	1	PULLEY GP-AUXILIARY DRIVE	109
Y	*321-6740*	1	PULLEY GP-CRANKSHAFT	111
Y	*308-2294*	1	PULLEY GP-WATER PUMP	112
Y	*308-2287*	1	PUMP GP-ENGINE OIL	129
Y	*328-3294*	1	PUMP GP-FUEL INJECTION	201
Y	*328-1882*	1	PUMP GP-FUEL TRANSFER	213
Y	*317-0979*	1	PUMP GP-WATER	148
Y	*308-2293*	1	STARTING MOTOR GP-ELECTRIC	228
Y	*308-2312*	1	SWITCH GP-PRESSURE	230
Y	*326-8542*	1	TURBOCHARGER GP	161
Y	*308-2306*	1	V-BELT GP (FAN DRIVE)	114
Y	*308-2285*	1	VALVE MECHANISM GP	118

Y-SEPARATE ILLUSTRATION

ENGINE ARRANGEMENT

321-6712 ENGINE AR-PRIMARY

40 BRAKE KW (54 BHP) AT 2600 RPM

SMCS-1000 **i03115920**

NOTE	PART NUMBER	QTY	PART NAME 1 2 3 4 5 6 (PRODUCT LEVEL)	SEE PAGE
Y	*308-2305*	1	ALTERNATOR GP-CHARGING	215
Y	*331-0216*	1	CAMSHAFT GP	29
Y	*321-6741*	1	CONNECTION GP-ELECTRICAL	218
Y	*308-2299*	1	CONNECTION GP-OIL	122
Y	*308-2302*	1	CONNECTION GP-WATER	135
Y	*322-2427*	1	CONNECTOR GP-CAB HEATER LINES	137
Y	*331-0215*	1	CONTROL GP-GOVERNOR	173
Y	*308-2313*	1	CONTROL GP-MANUAL START/STOP	219
Y	*308-2283*	1	CRANKSHAFT GP	39
Y	*308-2281*	1	CYLINDER BLOCK GP	43
Y	*308-2284*	1	CYLINDER HEAD GP	49
Y	*325-5669*	1	DRIVE GP-FAN	56
Y	*328-3296*	1	DRIVE GP-FRONT	53
Y	*322-2421*	1	FILLER GP-ENGINE OIL	125
Y	*308-2298*	1	FILTER GP-ENGINE OIL	127
Y	*322-2412*	1	FLYWHEEL GP	60
Y	*308-2311*	1	GLOW PLUG GP	222
Y	*311-1883*	1	HOUSING GP-FLYWHEEL	64
Y	*331-0214*	1	HOUSING GP-FRONT	87
Y	*309-6725*	1	LIFTING GP-ENGINE	90
Y	*315-5256*	1	MANIFOLD GP-EXHAUST	154
Y	*322-2416*	1	PAN GP-OIL	98
Y	*308-2286*	1	PISTON & ROD GP	103
Y	*322-2426*	1	PLUG GP-ENGINE	105
Y	*322-2420*	1	PLUG GP-OIL PAN	108
Y	*322-2422*	1	PULLEY GP-AUXILIARY DRIVE	109
Y	*321-6740*	1	PULLEY GP-CRANKSHAFT	111
Y	*308-2294*	1	PULLEY GP-WATER PUMP	112
Y	*308-2287*	1	PUMP GP-ENGINE OIL	129
Y	*328-3294*	1	PUMP GP-FUEL INJECTION	201
Y	*328-1882*	1	PUMP GP-FUEL TRANSFER	213
Y	*317-0979*	1	PUMP GP-WATER	148
Y	*308-2293*	1	STARTING MOTOR GP-ELECTRIC	228
Y	*308-2312*	1	SWITCH GP-PRESSURE	230
Y	*326-8542*	1	TURBOCHARGER GP	161
Y	*308-2306*	1	V-BELT GP (FAN DRIVE)	114
Y	*308-2285*	1	VALVE MECHANISM GP	118

Y-SEPARATE ILLUSTRATION

ENGINE ARRANGEMENT

325-4339 ENGINE AR-PRIMARY

45 BRAKE KW (60 BHP) AT 2800 RPM

SMCS-1000 **i03135229**

NOTE	PART NUMBER	QTY	PART NAME 1 2 3 4 5 6 (PRODUCT LEVEL)	SEE PAGE
Y	*329-9278*	1	CAMSHAFT GP	27
Y	*308-2309*	1	CONNECTION GP-EXHAUST	151
Y	*308-2299*	1	CONNECTION GP-OIL	122
Y	*329-9277*	1	CONTROL GP-GOVERNOR	171
Y	*331-9611*	1	CONTROL GP-MANUAL START/STOP	221
Y	*308-2307*	1	COVER GP-FRONT HOUSING	33
Y	*308-2283*	1	CRANKSHAFT GP	39
Y	*308-2281*	1	CYLINDER BLOCK GP	43
Y	*308-2284*	1	CYLINDER HEAD GP	49
Y	*308-2297*	1	FILLER GP-ENGINE OIL	123
Y	*308-2298*	1	FILTER GP-ENGINE OIL	127
Y	*317-0586*	1	FLYWHEEL GP	59
Y	*317-3040*	1	GLOW PLUG GP	223
Y	*317-0588*	1	HOUSING GP-FLYWHEEL	65
Y	*308-2288*	1	HOUSING GP-FRONT	66
Y	*317-7191*	1	HOUSING GP-WATER REGULATOR	141
Y	*331-9614*	1	LAMP GP	236
Y	*309-6725*	1	LIFTING GP-ENGINE	90
Y	*315-7813*	1	MOUNTING GP-FAN	142
Y	*331-9610*	1	PAN GP-OIL	100
Y	*308-2286*	1	PISTON & ROD GP	103
Y	*323-9157*	1	PLUG GP-ENGINE	106
Y	*322-2420*	1	PLUG GP-OIL PAN	108
Y	*321-6740*	1	PULLEY GP-CRANKSHAFT	111
Y	*308-2294*	1	PULLEY GP-WATER PUMP	112
Y	*308-2287*	1	PUMP GP-ENGINE OIL	129
Y	*308-2310*	1	PUMP GP-FILTER & FUEL TRANSFER	184
Y	*308-2289*	1	PUMP GP-FUEL INJECTION	188
Y	*317-0979*	1	PUMP GP-WATER	148
Y	*317-3036*	1	STARTING MOTOR GP-ELECTRIC	229
Y	*308-2317*	1	SWITCH GP-TEMPERATURE (ENGINE COOLANT)	233
Y	*308-2308*	1	TURBOCHARGER GP	157
Y	*308-2285*	1	VALVE MECHANISM GP	118

Y-SEPARATE ILLUSTRATION

ENGINE ARRANGEMENT

326-6416 ENGINE AR-PRIMARY

SMCS-1000 **i03177185**

NOTE	PART NUMBER	QTY	PART NAME 1 2 3 4 5 6 (PRODUCT LEVEL)	SEE PAGE
Y	*308-2305*	1	ALTERNATOR GP-CHARGING	215
Y	*329-9278*	1	CAMSHAFT GP	27
Y	*321-6741*	1	CONNECTION GP-ELECTRICAL	218
Y	*308-2309*	1	CONNECTION GP-EXHAUST	151
Y	*308-2299*	1	CONNECTION GP-OIL	122
Y	*308-2302*	1	CONNECTION GP-WATER	135
Y	*329-9277*	1	CONTROL GP-GOVERNOR	171
Y	*308-2313*	1	CONTROL GP-MANUAL START/STOP	219
Y	*308-2307*	1	COVER GP-FRONT HOUSING	33
Y	*308-2283*	1	CRANKSHAFT GP	39
Y	*308-2281*	1	CYLINDER BLOCK GP	43
Y	*308-2284*	1	CYLINDER HEAD GP	49
Y	*308-2297*	1	FILLER GP-ENGINE OIL	123
Y	*308-2298*	1	FILTER GP-ENGINE OIL	127
Y	*327-7632*	1	FLYWHEEL GP	62
Y	*308-2311*	1	GLOW PLUG GP	222
Y	*317-0588*	1	HOUSING GP-FLYWHEEL	65
Y	*308-2288*	1	HOUSING GP-FRONT	66
Y	*309-6725*	1	LIFTING GP-ENGINE	90
Y	*315-7813*	1	MOUNTING GP-FAN	142
Y	*317-3037*	1	PAN GP-OIL	96
Y	*308-2286*	1	PISTON & ROD GP	103
Y	*309-6720*	1	PLUG GP-OIL PAN	107
Y	*321-6740*	1	PULLEY GP-CRANKSHAFT	111
Y	*311-9027*	1	PULLEY GP-WATER PUMP	113
Y	*308-2287*	1	PUMP GP-ENGINE OIL	129
Y	*308-2310*	1	PUMP GP-FILTER & FUEL TRANSFER	184
Y	*308-2289*	1	PUMP GP-FUEL INJECTION	188
Y	*317-0979*	1	PUMP GP-WATER	148
Y	*308-2293*	1	STARTING MOTOR GP-ELECTRIC	228
Y	*315-7819*	1	SWITCH GP-PRESSURE	231
Y	*308-2317*	1	SWITCH GP-TEMPERATURE (ENGINE COOLANT)	233
Y	*308-2308*	1	TURBOCHARGER GP	157
Y	*311-9029*	1	V-BELT GP	115
Y	*308-2285*	1	VALVE MECHANISM GP	118

Y-SEPARATE ILLUSTRATION

ENGINE ARRANGEMENT

326-7873 ENGINE AR-PRIMARY

SMCS-1000 **i03177183**

NOTE	PART NUMBER	QTY	PART NAME 1 2 3 4 5 6 (PRODUCT LEVEL)	SEE PAGE
Y	*308-2305*	1	ALTERNATOR GP-CHARGING	215
Y	*332-1364*	1	CAMSHAFT GP	31
Y	*308-2319*	1	CONNECTION GP-ELECTRICAL	217
Y	*308-2309*	1	CONNECTION GP-EXHAUST	151
Y	*308-2299*	1	CONNECTION GP-OIL	122
Y	*308-2302*	1	CONNECTION GP-WATER	135
Y	*332-1363*	1	CONTROL GP-GOVERNOR	175
Y	*308-2307*	1	COVER GP-FRONT HOUSING	33
Y	*308-2283*	1	CRANKSHAFT GP	39
Y	*308-2281*	1	CYLINDER BLOCK GP	43
Y	*308-2284*	1	CYLINDER HEAD GP	49
Y	*308-2297*	1	FILLER GP-ENGINE OIL	123
Y	*308-2298*	1	FILTER GP-ENGINE OIL	127
Y	*308-5704*	1	FILTER GP-FUEL	177
Y	*327-7632*	1	FLYWHEEL GP	62
Y	*308-2311*	1	GLOW PLUG GP	222
Y	*317-0588*	1	HOUSING GP-FLYWHEEL	65
Y	*332-1362*	1	HOUSING GP-FRONT	88
Y	*308-2321*	1	LAMP GP	235
Y	*309-6725*	1	LIFTING GP-ENGINE	90
Y	*315-7813*	1	MOUNTING GP-FAN	142
Y	*308-2295*	1	PAN GP-OIL	92
Y	*308-2286*	1	PISTON & ROD GP	103
Y	*309-6720*	1	PLUG GP-OIL PAN	107
Y	*321-6740*	1	PULLEY GP-CRANKSHAFT	111
Y	*308-2294*	1	PULLEY GP-WATER PUMP	112
Y	*308-2287*	1	PUMP GP-ENGINE OIL	129
Y	*308-2310*	1	PUMP GP-FILTER & FUEL TRANSFER	184
Y	*308-2289*	1	PUMP GP-FUEL INJECTION	188
Y	*317-0979*	1	PUMP GP-WATER	148
Y	*320-9114*	1	SHUTOFF GP-ELECTRICAL	224
Y	*315-7817*	1	SOLENOID GP-SHUTOFF	225
Y	*308-2293*	1	STARTING MOTOR GP-ELECTRIC	228
Y	*315-7819*	1	SWITCH GP-PRESSURE	231
Y	*308-2317*	1	SWITCH GP-TEMPERATURE (ENGINE COOLANT)	233
Y	*308-2308*	1	TURBOCHARGER GP	157
Y	*308-2306*	1	V-BELT GP (FAN DRIVE)	114
Y	*308-2285*	1	VALVE MECHANISM GP	118

Y-SEPARATE ILLUSTRATION

ENGINE ARRANGEMENT

329-2157 ENGINE AR-PRIMARY

38 BRAKE KW (51 BHP) AT 3000 RPM

SMCS-1000 **i03122702**

NOTE	PART NUMBER	QTY	PART NAME 1 2 3 4 5 6 (PRODUCT LEVEL)	SEE PAGE
Y	*308-2305*	1	ALTERNATOR GP-CHARGING	215
Y	*325-9476*	1	CAMSHAFT GP	26
Y	*308-2319*	1	CONNECTION GP-ELECTRICAL	217
Y	*308-2302*	1	CONNECTION GP-WATER	135
Y	*308-2313*	1	CONTROL GP-MANUAL START/STOP	219
Y	*309-6722*	1	COVER GP-VALVE MECHANISM	35
Y	*309-6713*	1	CRANKSHAFT GP	41
Y	*309-6712*	1	CYLINDER BLOCK GP	45
Y	*309-6715*	1	CYLINDER HEAD GP	51
Y	*308-2304*	1	DRIVE GP-FAN	54
Y	*308-2303*	1	FAN GP-SUCTION	139
Y	*308-2297*	1	FILLER GP-ENGINE OIL	123
Y	*308-2298*	1	FILTER GP-ENGINE OIL	127
Y	*308-2291*	1	FLYWHEEL GP	57
Y	*308-2311*	1	GLOW PLUG GP	222
Y	*325-9475*	1	CONTROL GP-GOVERNOR	169
Y	*308-2290*	1	HOUSING GP-FLYWHEEL	63
Y	*311-1682*	1	HOUSING GP-FRONT	79
Y	*309-6725*	1	LIFTING GP-ENGINE	90
Y	*309-6724*	1	MANIFOLD GP-EXHAUST	153
Y	*308-4735*	1	MOUNTING GP-ENGINE OIL FILTER	128
Y	*311-1886*	1	PAN GP-OIL	94
Y	*309-6714*	1	PISTON & ROD GP	104
Y	*329-3696*	1	COVER GP-FRONT HOUSING	34
Y	*309-6720*	1	PLUG GP-OIL PAN	107
Y	*308-2300*	1	PULLEY GP-CRANKSHAFT	110
Y	*308-2294*	1	PULLEY GP-WATER PUMP	112
Y	*309-6717*	1	PUMP GP-ENGINE OIL	132
Y	*308-2310*	1	PUMP GP-FILTER & FUEL TRANSFER	184
Y	*311-1683*	1	PUMP GP-FUEL INJECTION	194
Y	*317-6706*	1	PUMP GP-FUEL PRM & PRIM FILTER	204
Y	*309-6721*	1	PUMP GP-WATER	146
Y	*308-2293*	1	STARTING MOTOR GP-ELECTRIC	228
Y	*315-7819*	1	SWITCH GP-PRESSURE	231
Y	*308-2314*	1	SWITCH GP-START	232
Y	*308-2317*	1	SWITCH GP-TEMPERATURE (ENGINE COOLANT)	233
Y	*308-2306*	1	V-BELT GP (FAN DRIVE)	114
Y	*309-6716*	1	VALVE MECHANISM GP	120

Y-SEPARATE ILLUSTRATION

BASIC ENGINE

311-9025 CAMSHAFT GP

SMCS-1210 **i02770458**

NOTE	REF NO	GRAPHIC REF	PART NUMBER	QTY	PART NAME 1 2 3 4 5 6 (PRODUCT LEVEL)	SEE PAGE
	1	1	**153-6838**	2	BOLT	
	2	1	**154-1680**	1	PLATE	
	3	1	**308-1904**	1	SLIDER	
	4	1	**309-6733**	1	CAMSHAFT AS	
	4A	1	**153-6492**	1	KEY-WOODRUFF	
	4B	1	**154-4505**	1	BEARING	
	4C	1	**308-1903**	1	GEAR-CAMSHAFT (66-TEETH)	
	4D	1	**313-9323**	1	SPACER	

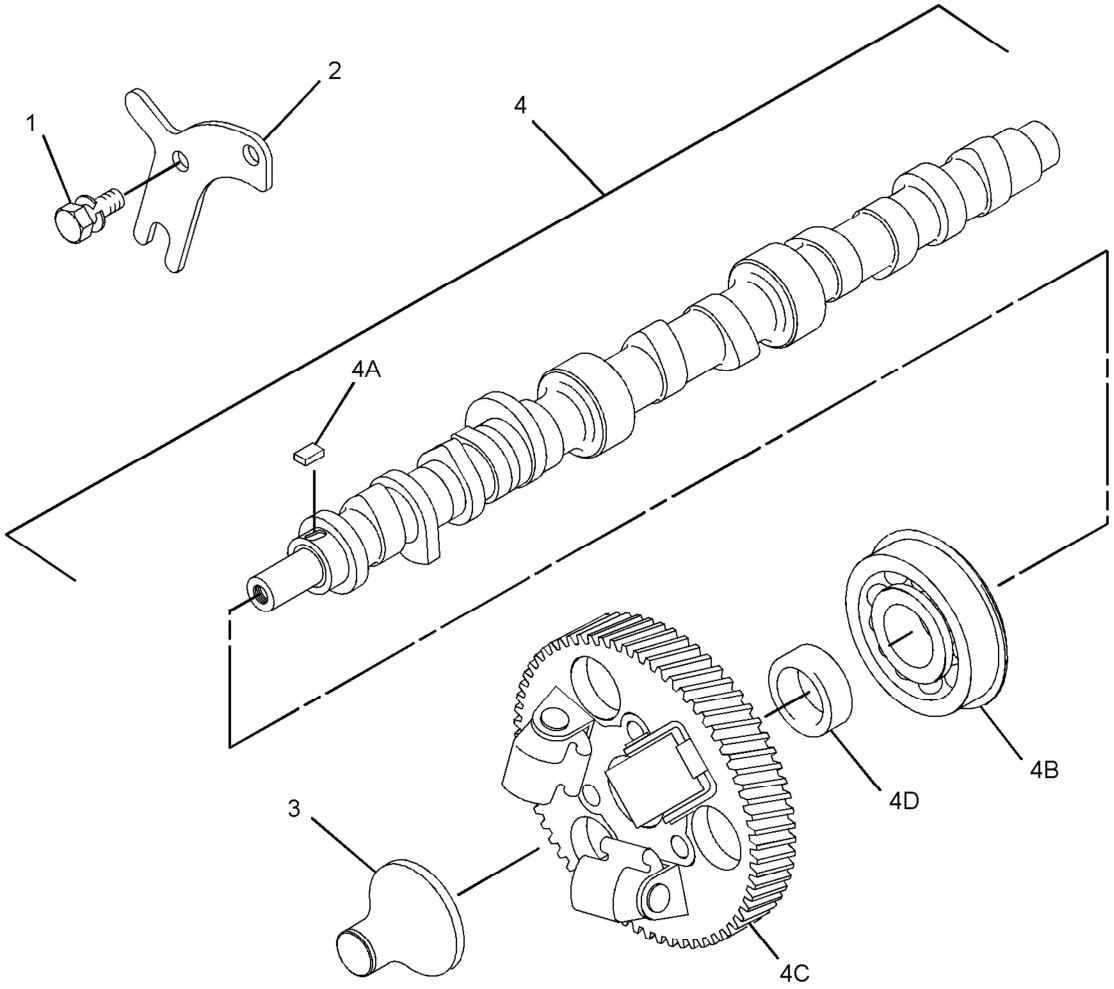

GRAPHIC #1 **<END>** g01418833

BASIC ENGINE

317-7188 CAMSHAFT GP

SMCS-1210 **i02853761**

NOTE	REF NO	GRAPHIC REF	PART NUMBER	QTY	PART NAME 1 2 3 4 5 6 (PRODUCT LEVEL)	SEE PAGE
	1	1	**153-6838**	2	BOLT	
	2	1	**154-1680**	1	PLATE	
	3	1	**308-1904**	1	SLIDER	
	4	1	**309-6733**	1	CAMSHAFT AS	
	4A	1	**153-6492**	1	KEY-WOODRUFF	
	4B	1	**154-4505**	1	BEARING	
	4C	1	**308-1903**	1	GEAR-CAMSHAFT (66-TEETH) (66-TEETH)	
	4D	1	**313-9323**	1	SPACER	

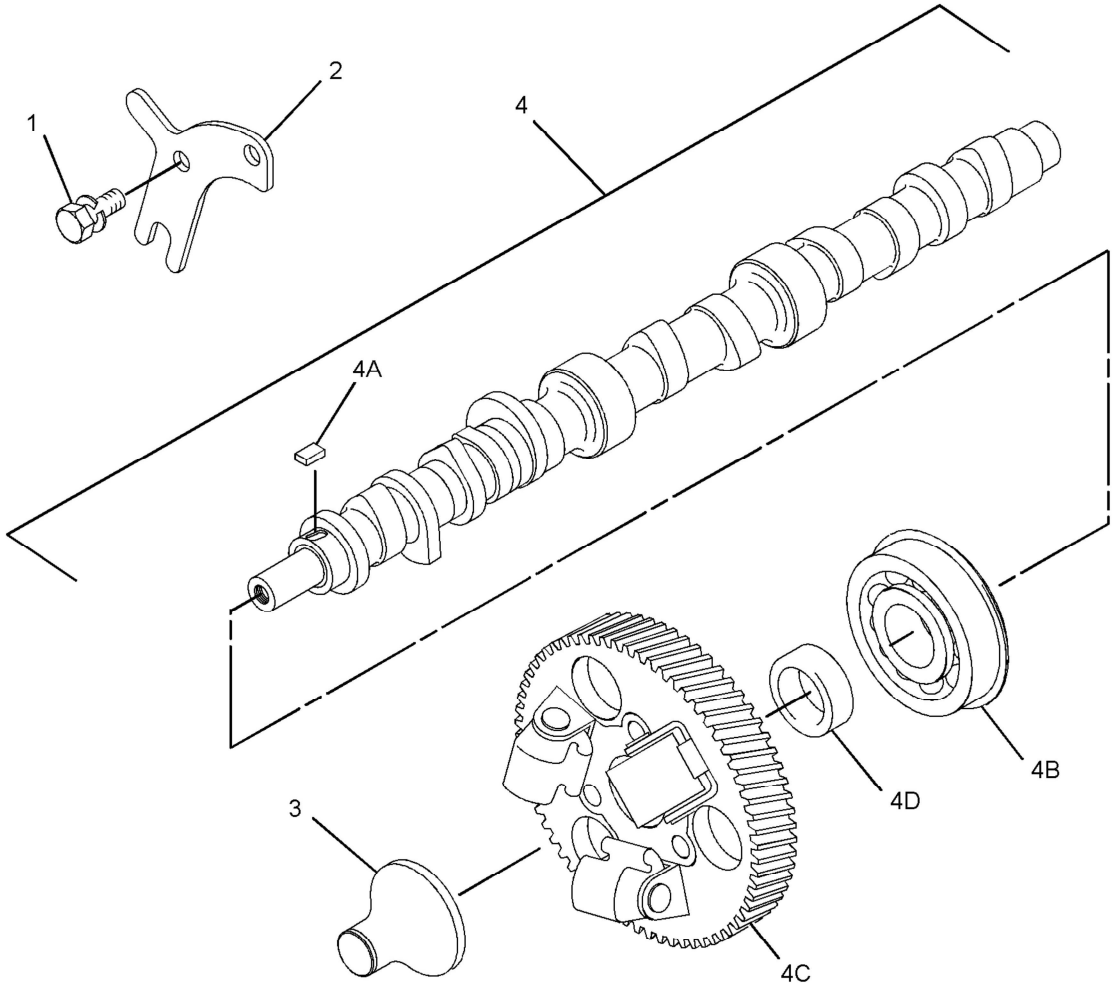

GRAPHIC #1 **<END>** g01418833

323-9147 CAMSHAFT GP

SMCS-1210 **i02908568**

NOTE	REF NO	GRAPHIC REF	PART NUMBER	QTY	PART NAME 1 2 3 4 5 6 (PRODUCT LEVEL)	SEE PAGE
	1	1	**153-6838**	2	BOLT	
	2	1	**154-1680**	1	PLATE	
	3	1	**308-1902**	1	CAMSHAFT AS	
	3A	1	**153-6492**	1	KEY-WOODRUFF	
	3B	1	**154-4505**	1	BEARING	
	3C	1	**308-1903**	1	GEAR-CAMSHAFT (66-TEETH)	
	3D	1	**313-9323**	1	SPACER	
	4	1	**308-1904**	1	SLIDER	

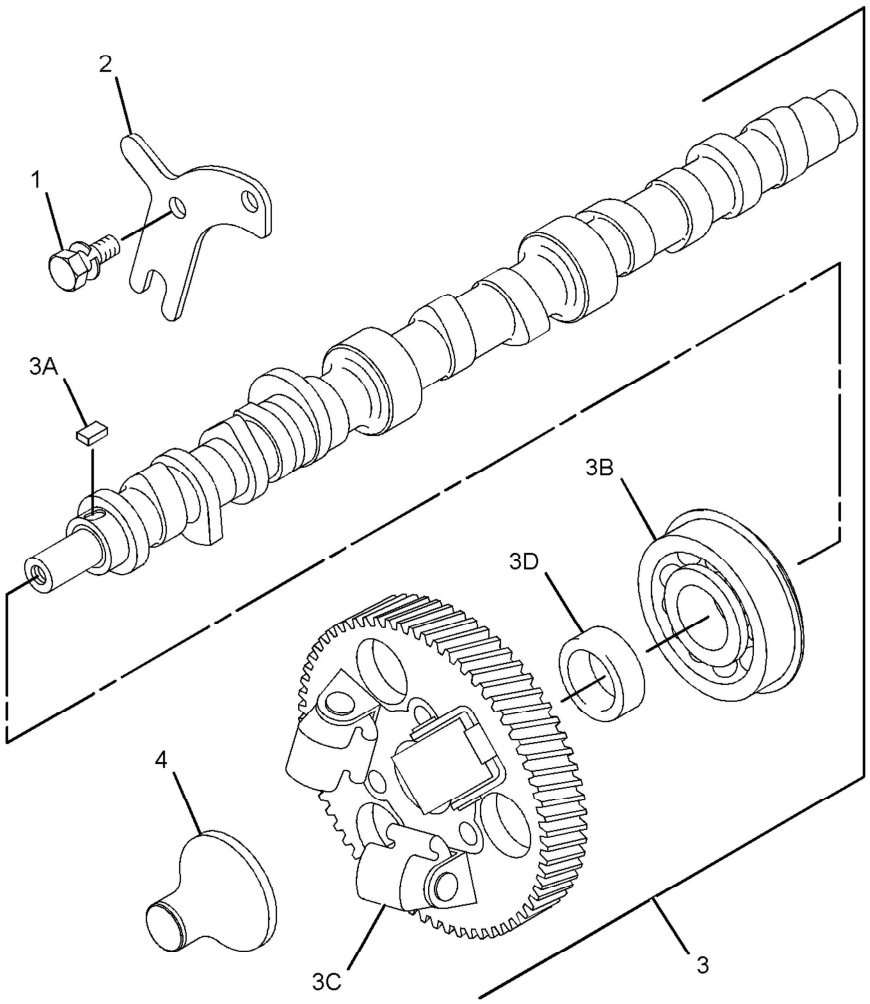

GRAPHIC #1 **<END>** g01629653

BASIC ENGINE

325-5663 CAMSHAFT GP

SMCS-1210 **i02962256**

NOTE	REF NO	GRAPHIC REF	PART NUMBER	QTY	PART NAME 1 2 3 4 5 6 (PRODUCT LEVEL)	SEE PAGE
	1	1	**153-6838**	2	BOLT	
	2	1	**154-1680**	1	PLATE	
	3	1	**321-4250**	1	CAMSHAFT GP	
	3A	1	**153-6492**	1	KEY-WOODRUFF	
	3B	1	**154-4505**	1	BEARING	
	3C	1	**313-9323**	1	SPACER	
	3D	1	**321-4251**	1	GEAR-CAMSHAFT	
	4	1	**321-4252**	1	SLIDER	

325-5663 **CAMSHAFT GP** *(contd.)* **i02962256**

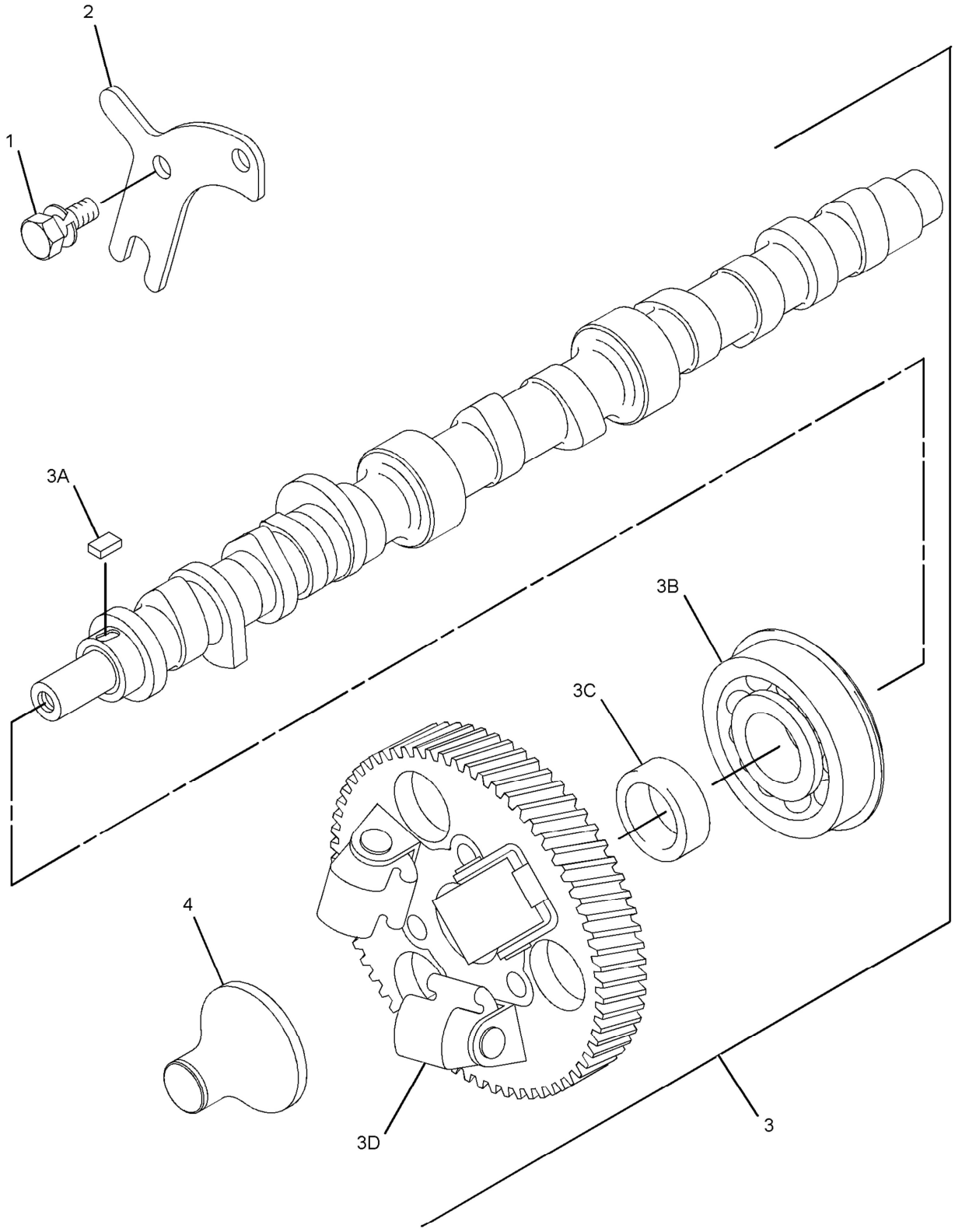

GRAPHIC #1 **<END>** g01543443

BASIC ENGINE

325-9476 CAMSHAFT GP

SMCS-1210 **i02958747**

NOTE	REF NO	GRAPHIC REF	PART NUMBER	QTY	PART NAME 1 2 3 4 5 6 (PRODUCT LEVEL)	SEE PAGE
	1	1	**153-6838**	2	BOLT	
	2	1	**154-1680**	1	PLATE	
	3	1	**308-1904**	1	SLIDER	
	4	1	**309-6733**	1	CAMSHAFT AS	
	4A	1	**153-6492**	1	KEY-WOODRUFF	
	4B	1	**154-4505**	1	BEARING	
	4C	1	**308-1903**	1	GEAR-CAMSHAFT (66-TEETH)	
	4D	1	**313-9323**	1	SPACER	

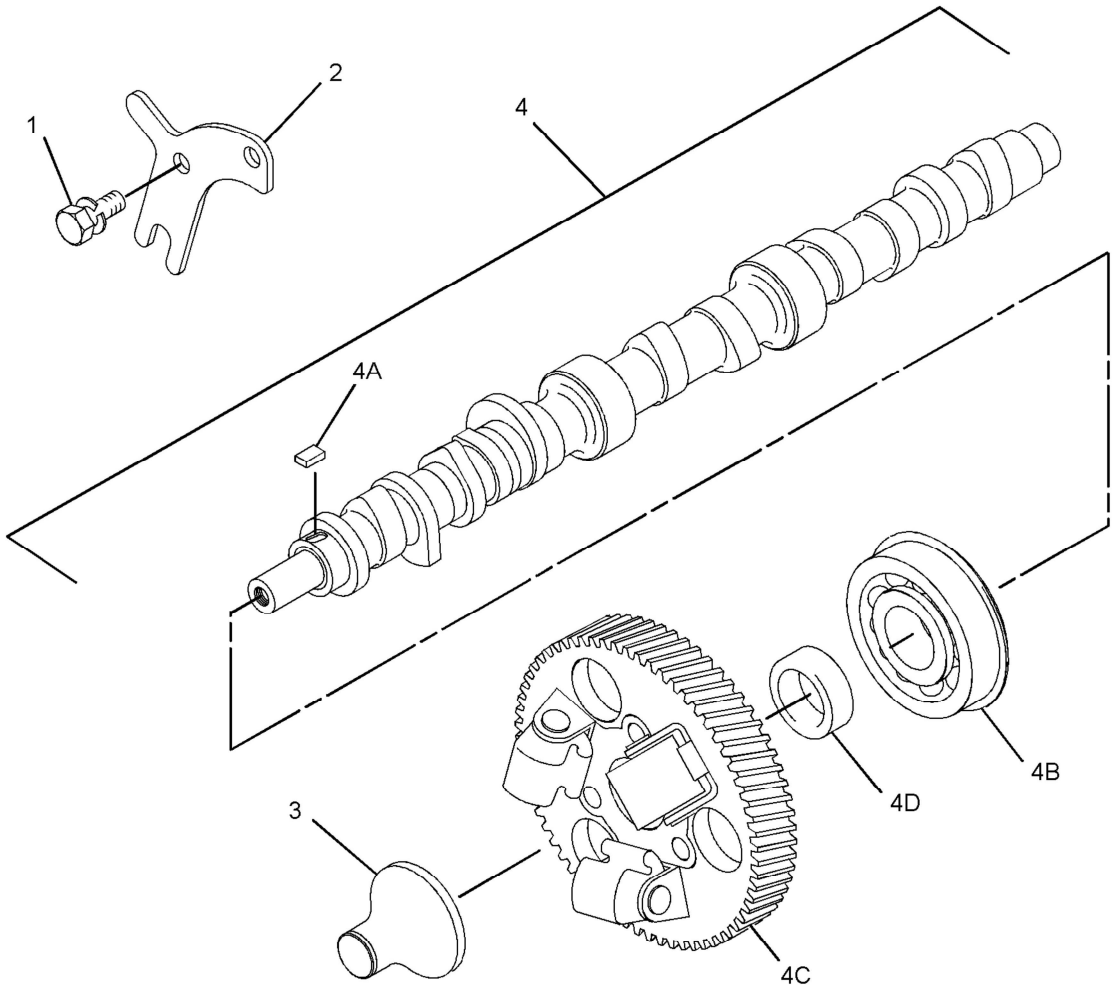

GRAPHIC #1 **<END>** g01418833

BASIC ENGINE

329-9278 CAMSHAFT GP

SMCS-1210 **i03075440**

NOTE	REF NO	GRAPHIC REF	PART NUMBER	QTY	PART NAME 1 2 3 4 5 6 (PRODUCT LEVEL)	SEE PAGE
	1	1	**6I-0846**	1	BOLT (M6X1X14-MM)	
	2	1	**153-6415**	1	WASHER	
	3	1	**153-6838**	2	BOLT	
	4	1	**154-1680**	1	PLATE	
	5	1	**308-1902**	1	CAMSHAFT AS	
	5A	1	**153-6492**	1	KEY-WOODRUFF	
	5B	1	**154-4505**	1	BEARING	
	5C	1	**308-1903**	1	GEAR-CAMSHAFT (66-TEETH)	
	5D	1	**313-9323**	1	SPACER	
	6	1	**308-1904**	1	SLIDER	

329-9278 **CAMSHAFT GP** *(contd.)* **i03075440**

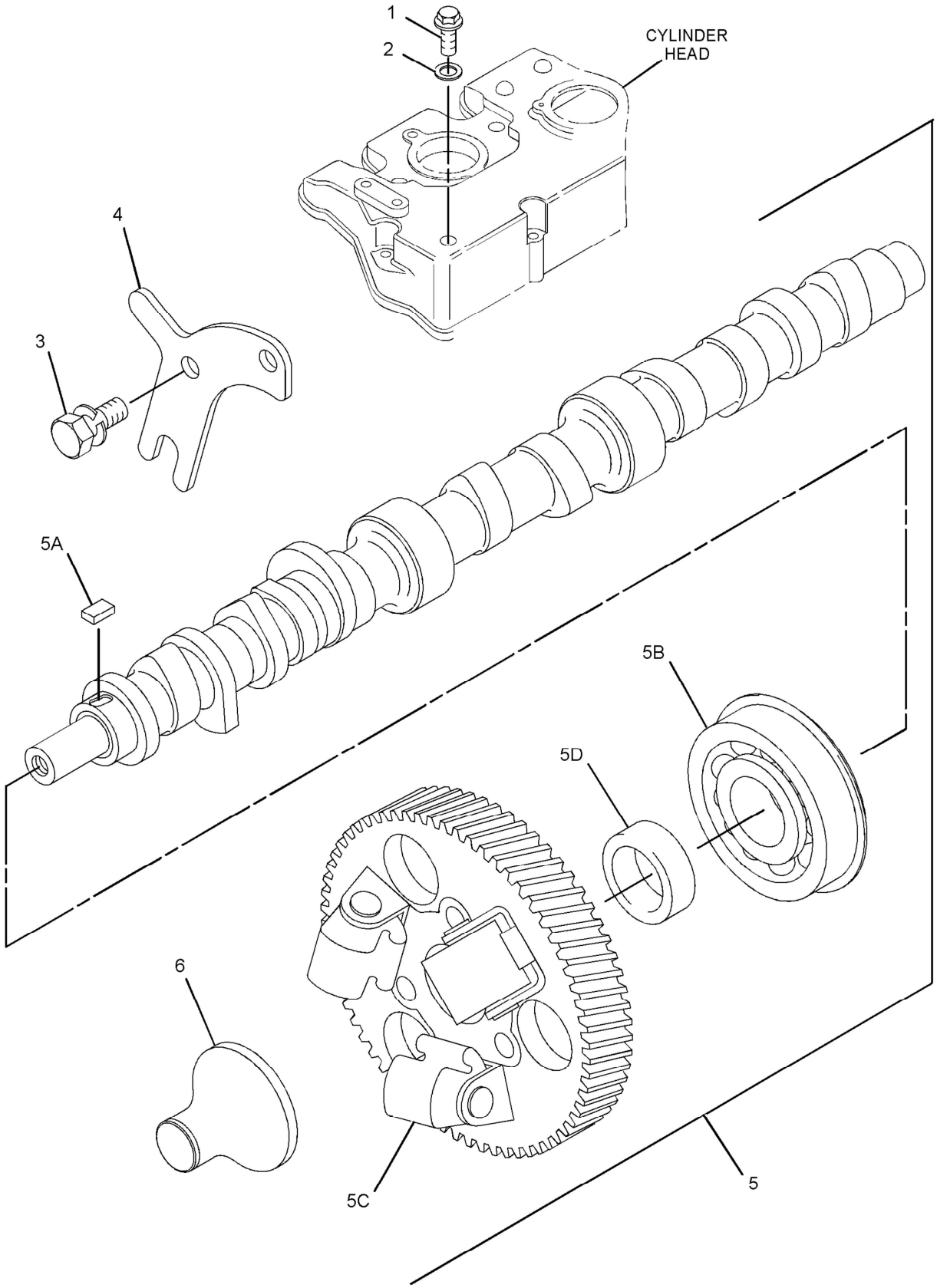

GRAPHIC #1

<END>

g01616642

BASIC ENGINE

331-0216 CAMSHAFT GP

SMCS-1210 **i03115940**

NOTE	REF NO	GRAPHIC REF	PART NUMBER	QTY	PART NAME 1 2 3 4 5 6 (PRODUCT LEVEL)	SEE PAGE
	1	1	**6I-0846**	1	BOLT (M6X1X14-MM)	
	2	1	**153-6415**	1	WASHER	
	3	1	**153-6838**	2	BOLT	
	4	1	**154-1680**	1	PLATE	
	5	1	**308-1902**	1	CAMSHAFT AS	
	5A	1	**153-6492**	1	KEY-WOODRUFF	
	5B	1	**154-4505**	1	BEARING	
	5C	1	**308-1903**	1	GEAR-CAMSHAFT (66-TEETH)	
	5D	1	**313-9323**	1	SPACER	
	6	1	**308-1904**	1	SLIDER	

331-0216 **CAMSHAFT GP** *(contd.)* **i03115940**

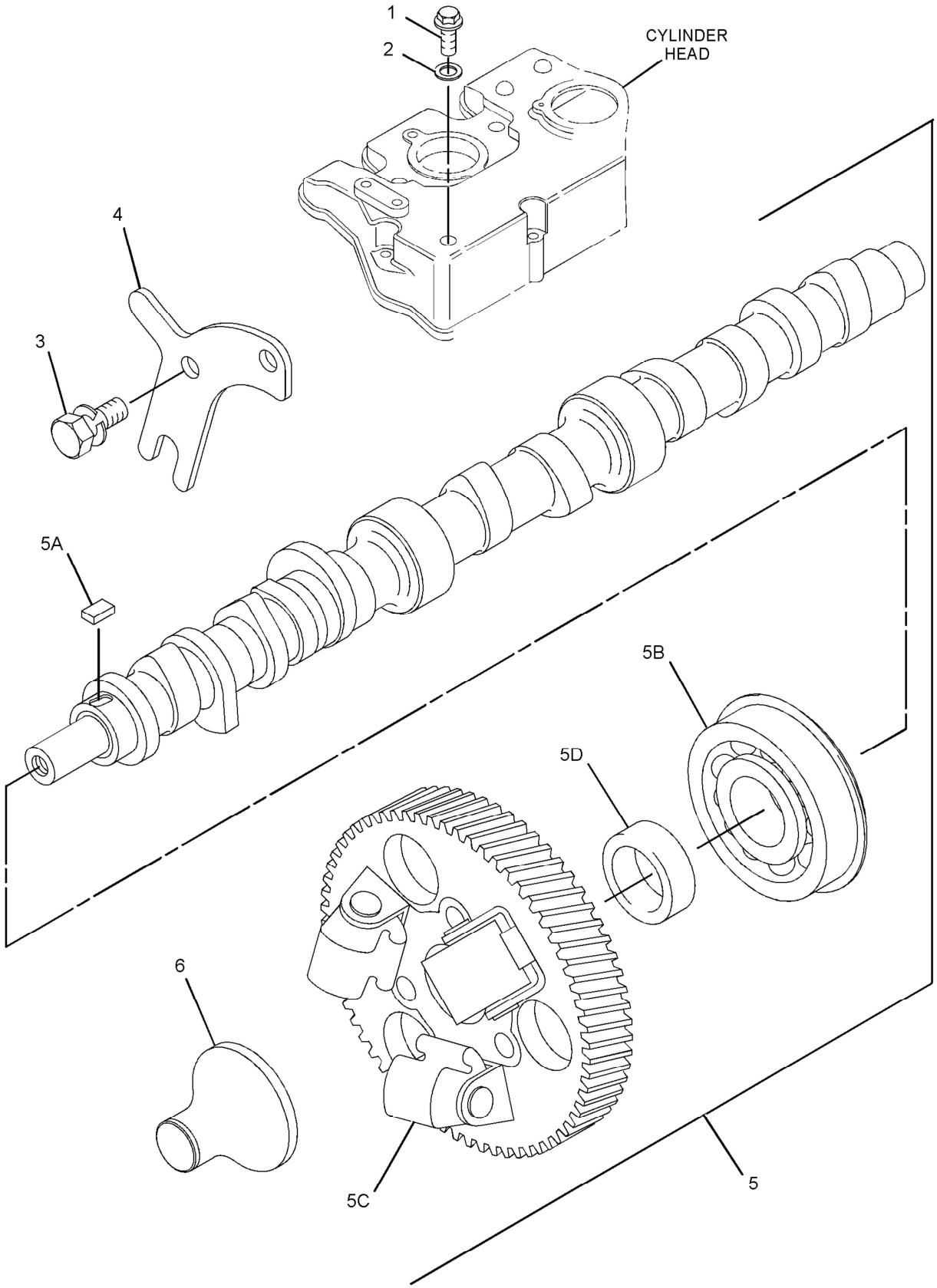

GRAPHIC #1

<END>

g01616642

BASIC ENGINE

332-1364 CAMSHAFT GP

SMCS-1210 **i03179578**

NOTE	REF NO	GRAPHIC REF	PART NUMBER	QTY	PART NAME 1 2 3 4 5 6 (PRODUCT LEVEL)	SEE PAGE
	1	1	**6I-0846**	1	BOLT (M6X1X14-MM)	
	2	1	**153-6415**	1	WASHER	
	3	1	**153-6838**	2	BOLT	
	4	1	**154-1680**	1	PLATE	
	5	1	**308-1902**	1	CAMSHAFT AS	
	5A	1	**153-6492**	1	KEY-WOODRUFF	
	5B	1	**154-4505**	1	BEARING	
	5C	1	**308-1903**	1	GEAR-CAMSHAFT (66-TEETH)	
	5D	1	**313-9323**	1	SPACER	
	6	1	**308-1904**	1	SLIDER	

332-1364 **CAMSHAFT GP** *(contd.)* **i03179578**

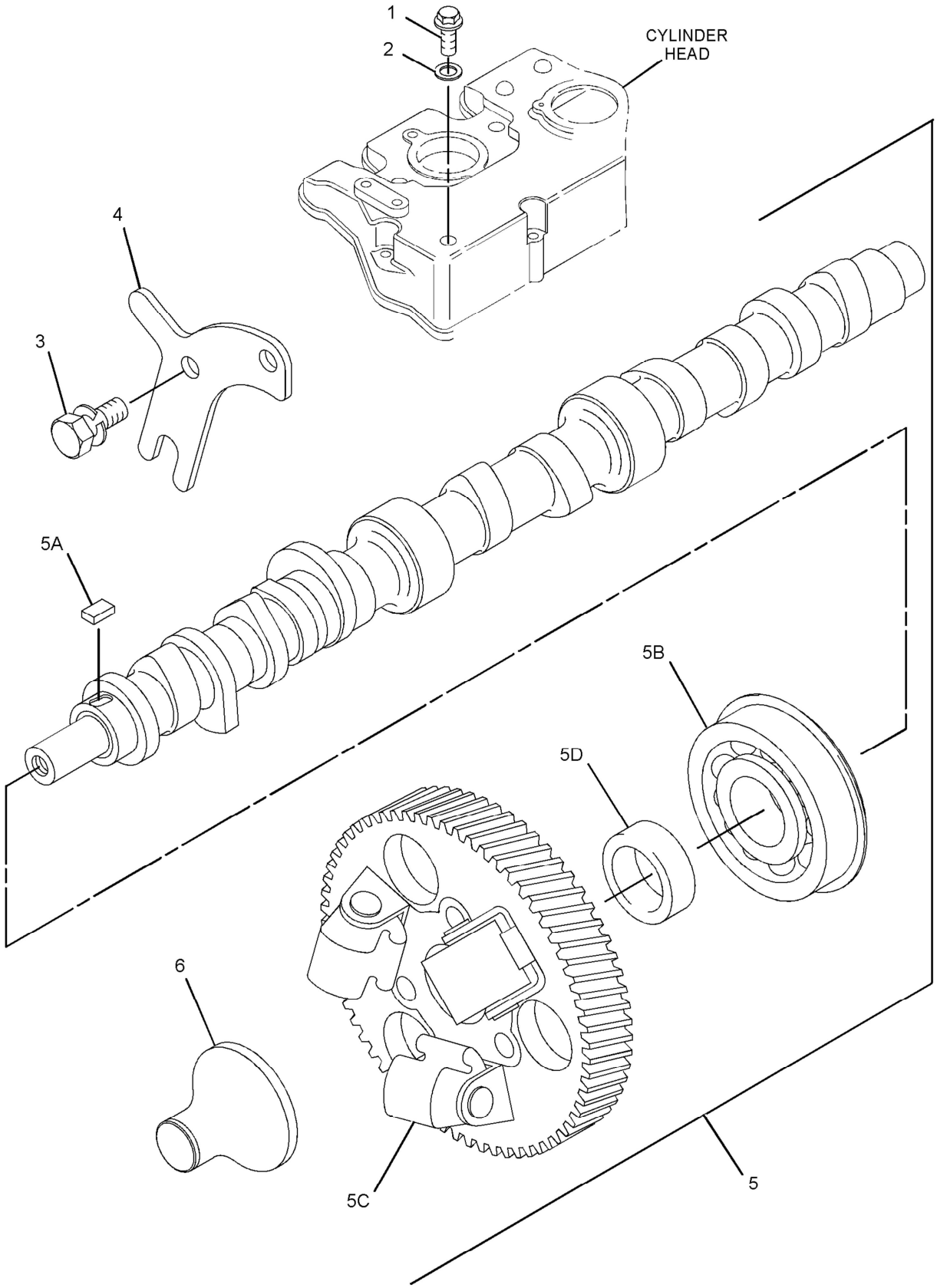

GRAPHIC #1

<END>

g01616642

308-2307 COVER GP-FRONT HOUSING

SMCS-1151, 1166 **i02998718**

NOTE	REF NO	GRAPHIC REF	PART NUMBER	QTY	PART NAME 1 2 3 4 5 6 (PRODUCT LEVEL)	SEE PAGE
	1	1	**6I-0594**	2	NUT (M10X1.15-THD)	
	3	1	**164-7468**	2	BOLT	
	4	1	**308-1874**	1	HOLDER	
	5	1	**308-1875**	3	SEAL-O-RING	
	6	1	**328-3229**	2	COVER	

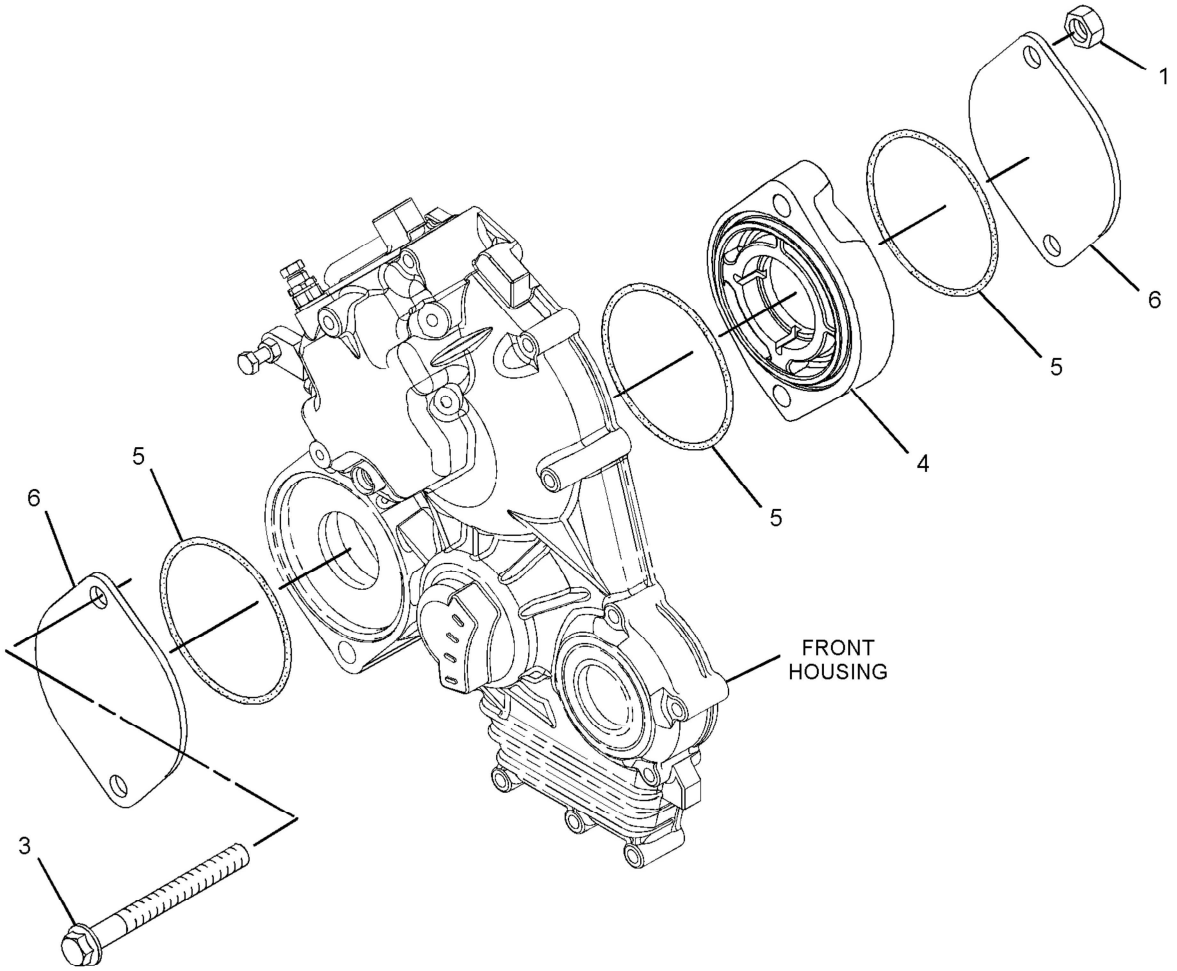

GRAPHIC #1 **<END>** g01643053

BASIC ENGINE

329-3696 COVER GP-FRONT HOUSING

SMCS-1151, 1166 **i03070449**

NOTE	REF NO	GRAPHIC REF	PART NUMBER	QTY	PART NAME 1 2 3 4 5 6 (PRODUCT LEVEL)	SEE PAGE
	1	1	**6I-0594**	2	NUT (M10X1.15-THD)	
	2	1	**100-4463**	2	BOLT (M10X1.5X80-MM)	
	3	1	**308-1875**	2	SEAL-O-RING	
	4	1	**328-3229**	1	COVER	
	5	1	**329-3694**	1	PLATE	
	6	1	**329-3695**	1	COVER	

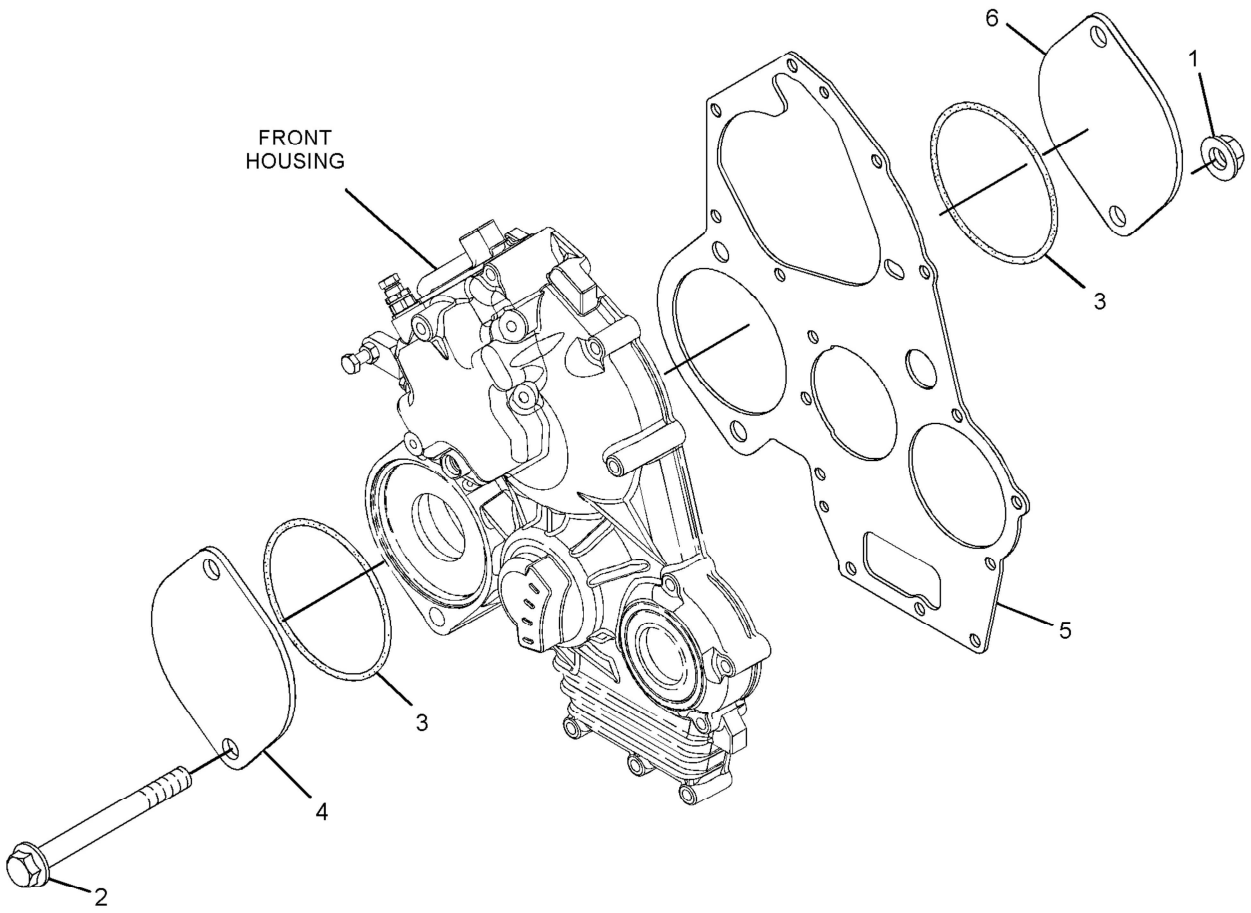

GRAPHIC #1 **<END>** g01637231

BASIC ENGINE

309-6722 COVER GP-VALVE MECHANISM

SMCS-1107 **i02920662**

NOTE	REF NO	GRAPHIC REF	PART NUMBER	QTY	PART NAME 1 2 3 4 5 6 (PRODUCT LEVEL)	SEE PAGE
	1	2	**153-5939**	1	GAUZE (CRANKCASE BREATHER)	
	2	2	**153-5962**	3	BOLT	
	3	2	**153-7640**	2	BOLT	
	4	2	**154-1347**	4	NUT	
	5	1	**155-8009**	2	BOLT	
	6	2	**165-2140**	2	BOLT	
	7	2	**190-3762**	4	WASHER	
	8	2	**217-5859**	1	VALVE-BREATHER (CRANKCASE)	
	9	2	**217-5860**	4	BOLT	
	10	2	**320-8401**	1	PLATE-RETAINING	
	11	2	**217-5862**	6	BOLT	
	12	2	**217-5864**	1	GASKET	
	13	1	**225-8533**	1	GASKET	
	14	2	**233-0695**	1	SEAL-VALVE COVER	
	15	2	**233-7061**	1	COVER-VALVE	
	16	2	**309-6735**	1	TUBE-AIR	
	17	1	**309-6736**	1	COVER	

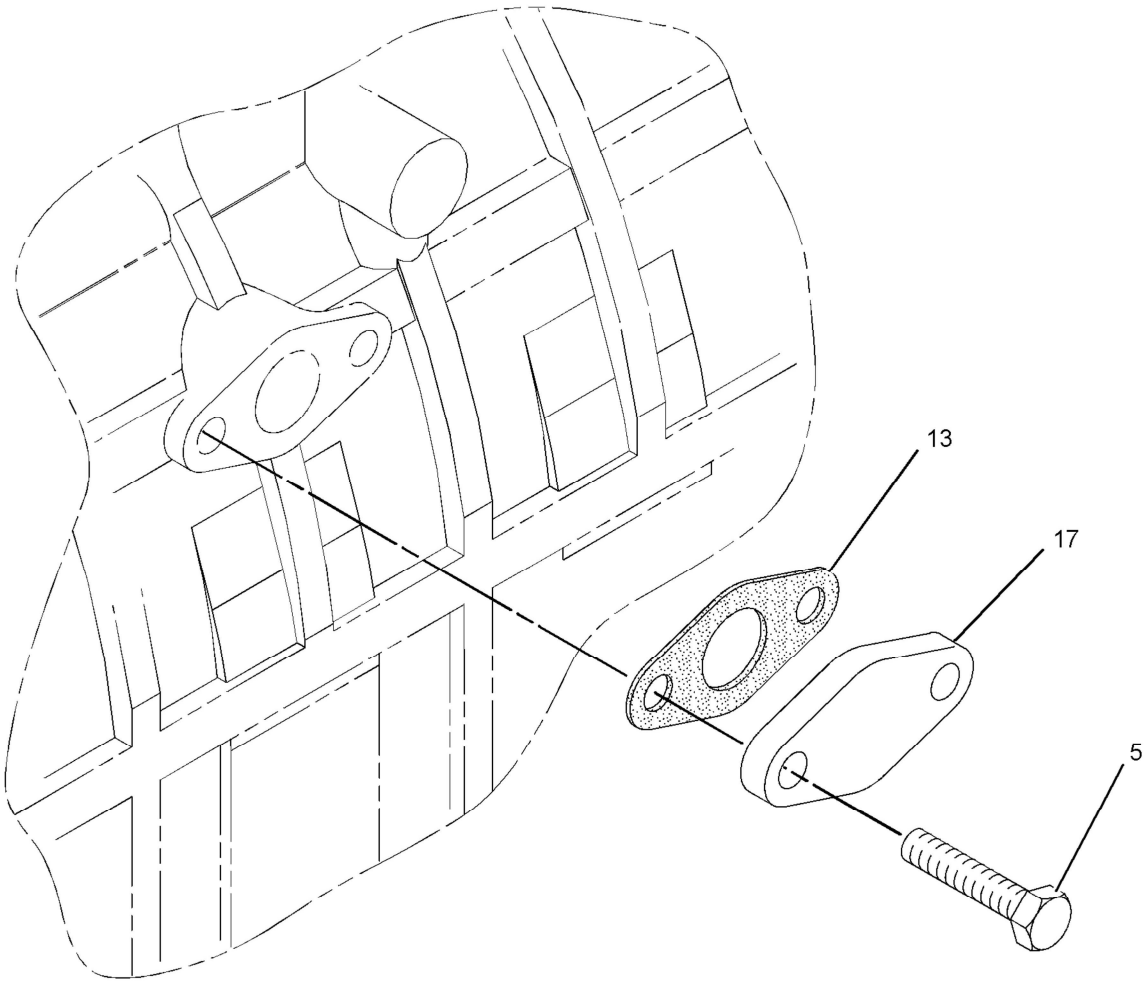

GRAPHIC #1 g01397234

309-6722 **COVER GP-VALVE MECHANISM** *(contd.)* **i02920662**

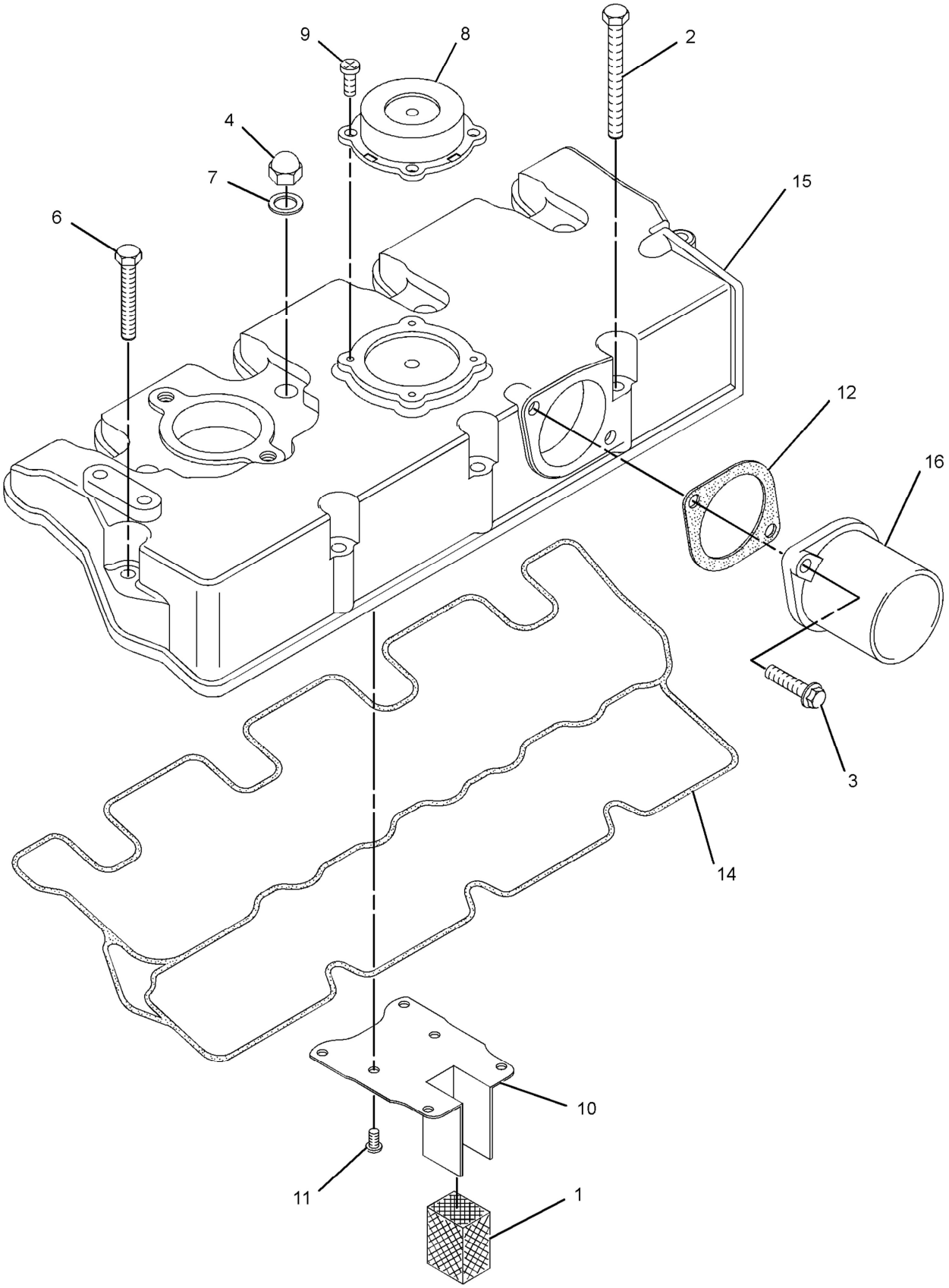

GRAPHIC #2

<END>

g01397236

BASIC ENGINE

317-0590 COVER GP-VALVE MECHANISM

SMCS-1107 **i02851879**

NOTE	REF NO	GRAPHIC REF	PART NUMBER	QTY	PART NAME 1 2 3 4 5 6 (PRODUCT LEVEL)	SEE PAGE
	1	2	**153-5939**	1	GAUZE (CRANKCASE BREATHER)	
	2	2	**153-5962**	3	BOLT	
	3	2	**153-7640**	2	BOLT	
	4	2	**154-1347**	4	NUT	
	5	1	**155-8009**	2	BOLT	
	6	2	**165-2140**	2	BOLT	
	7	2	**190-3762**	4	WASHER	
	8	2	**217-5859**	1	VALVE-BREATHER (CRANKCASE)	
	9	2	**217-5860**	4	BOLT	
	10	2	**217-5861**	1	PLATE-RETAINING	
	11	2	**217-5862**	6	BOLT	
	12	2	**217-5864**	1	GASKET	
	13	1	**225-8533**	1	GASKET	
	14	2	**233-0695**	1	SEAL-VALVE COVER	
	15	2	**233-7060**	1	COVER-VALVE	
	16	2	**309-6735**	1	TUBE-AIR	
	17	1	**309-6736**	1	COVER	

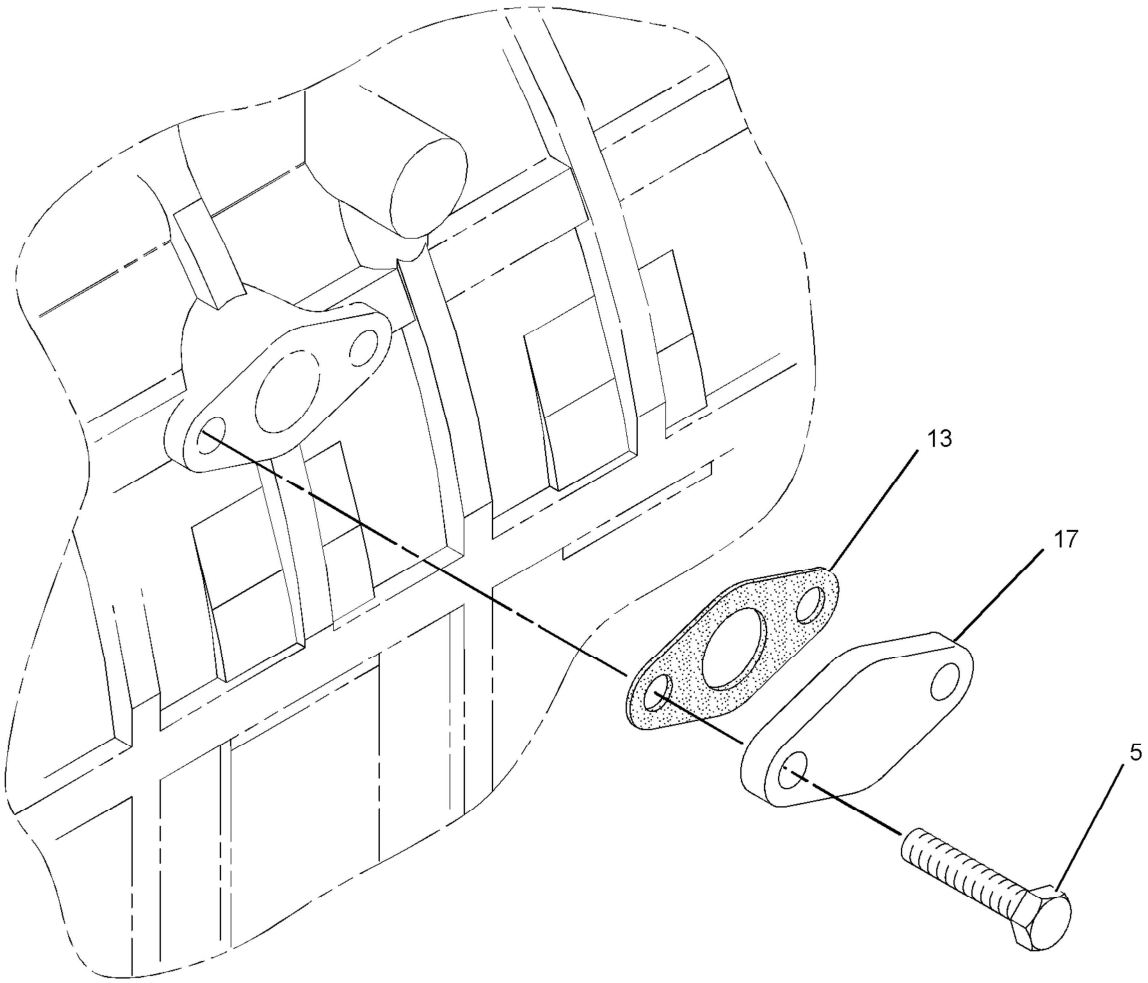

GRAPHIC #1 g01421747

317-0590 **COVER GP-VALVE MECHANISM** *(contd.)* **i02851879**

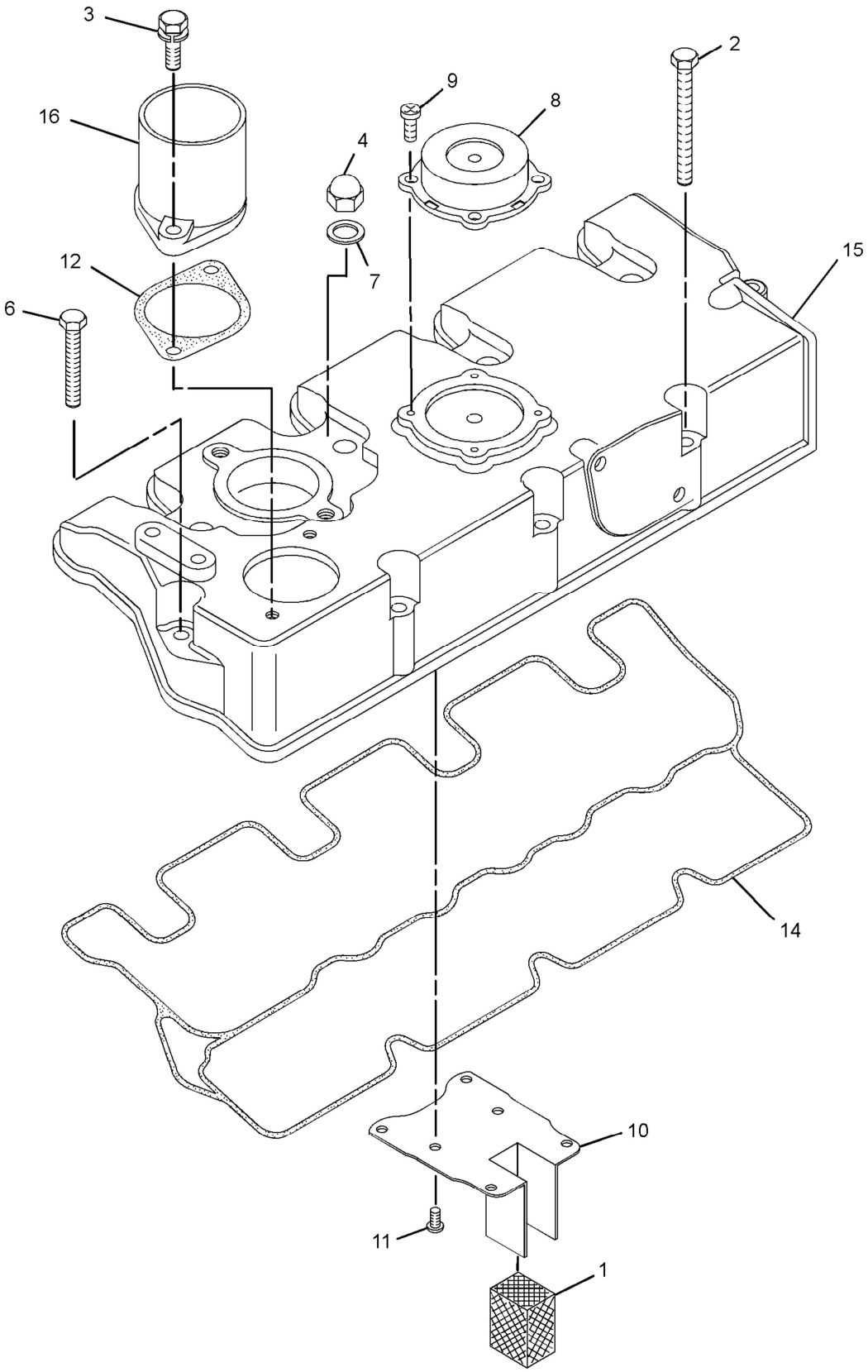

GRAPHIC #2

<END>

g01421749

BASIC ENGINE

308-2283 CRANKSHAFT GP

SMCS-1202 **i02752406**

NOTE	REF NO	GRAPHIC REF	PART NUMBER	QTY	PART NAME 1 2 3 4 5 6 (PRODUCT LEVEL)	SEE PAGE
	1	1	**154-0181**	1	CAP AS-BEARING	
	1A	1	**153-5402**	2	DOWEL	
	1B	1	**154-0385**	2	BOLT	
	2	1	**154-0386**	1	CAP AS-BEARING	
	2A	1	**153-5402**	2	DOWEL	
	2B	1	**154-0385**	2	BOLT	
	3	1	**154-0388**	1	CAP AS-BEARING	
	3A	1	**153-5402**	2	DOWEL	
	3B	1	**154-0385**	2	BOLT	
	4	1	**154-0389**	1	CAP AS-BEARING	
	4A	1	**153-5402**	2	DOWEL	
	4B	1	**154-0385**	2	BOLT	
	5	1	**154-1230**	1	WASHER-THRUST	
	6	1	**154-1231**	2	WASHER-THRUST	
	7	1	**156-6971**	3	BOLT	
	8	1	**183-1336**	2	BOLT	
	9	1	**308-1852**	1	CRANKSHAFT AS	
	9A	1	**153-5518**	1	KEY	
	9B	1	**308-1853**	1	GEAR-CRANKSHAFT	
	10	1	**308-1855**	1	KIT-BEARING	
	11	1	**308-2362**	1	KIT-BEARING	

308-2283 **CRANKSHAFT GP** *(contd.)* **i02752406**

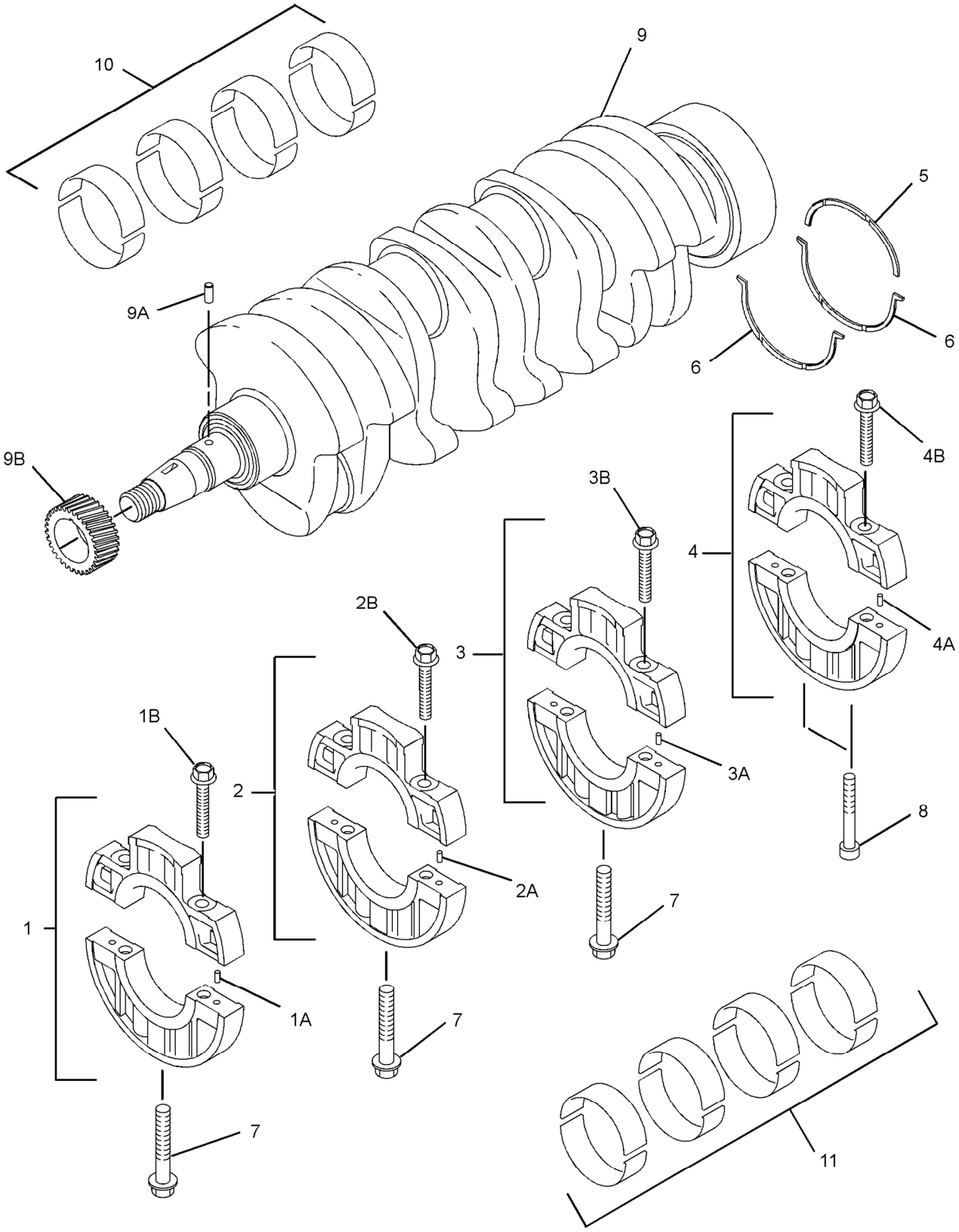

GRAPHIC #1 **<END>** g01406829

BASIC ENGINE

309-6713 CRANKSHAFT GP

SMCS-1202 **i02769831**

NOTE	REF NO	GRAPHIC REF	PART NUMBER	QTY	PART NAME 1 2 3 4 5 6 (PRODUCT LEVEL)	SEE PAGE
	1	1	**154-0181**	1	CAP AS-BEARING	
	1A	1	**153-5402**	2	DOWEL	
	1B	1	**154-0385**	2	BOLT	
	2	1	**154-0386**	1	CAP AS-BEARING	
	2A	1	**153-5402**	2	DOWEL	
	2B	1	**154-0385**	2	BOLT	
	3	1	**154-0388**	1	CAP AS-BEARING	
	3A	1	**153-5402**	2	DOWEL	
	3B	1	**154-0385**	2	BOLT	
	4	1	**154-0389**	1	CAP AS-BEARING	
	4A	1	**153-5402**	2	DOWEL	
	4B	1	**154-0385**	2	BOLT	
	5	1	**154-1230**	1	WASHER-THRUST	
	6	1	**154-1231**	2	WASHER-THRUST	
	7	1	**156-6971**	3	BOLT	
	8	1	**183-1336**	2	BOLT	
	9	1	**308-1852**	1	CRANKSHAFT AS	
	9A	1	**153-5518**	1	KEY	
	9B	1	**308-1853**	1	GEAR-CRANKSHAFT (62-TEETH)	
	10	1	**308-1855**	1	KIT-BEARING (ROD) (0.52-MM THK)	
	11	1	**308-1854**	1	KIT-BEARING (MAIN) (0.68-MM THK)	

309-6713 **CRANKSHAFT GP** *(contd.)* **i02769831**

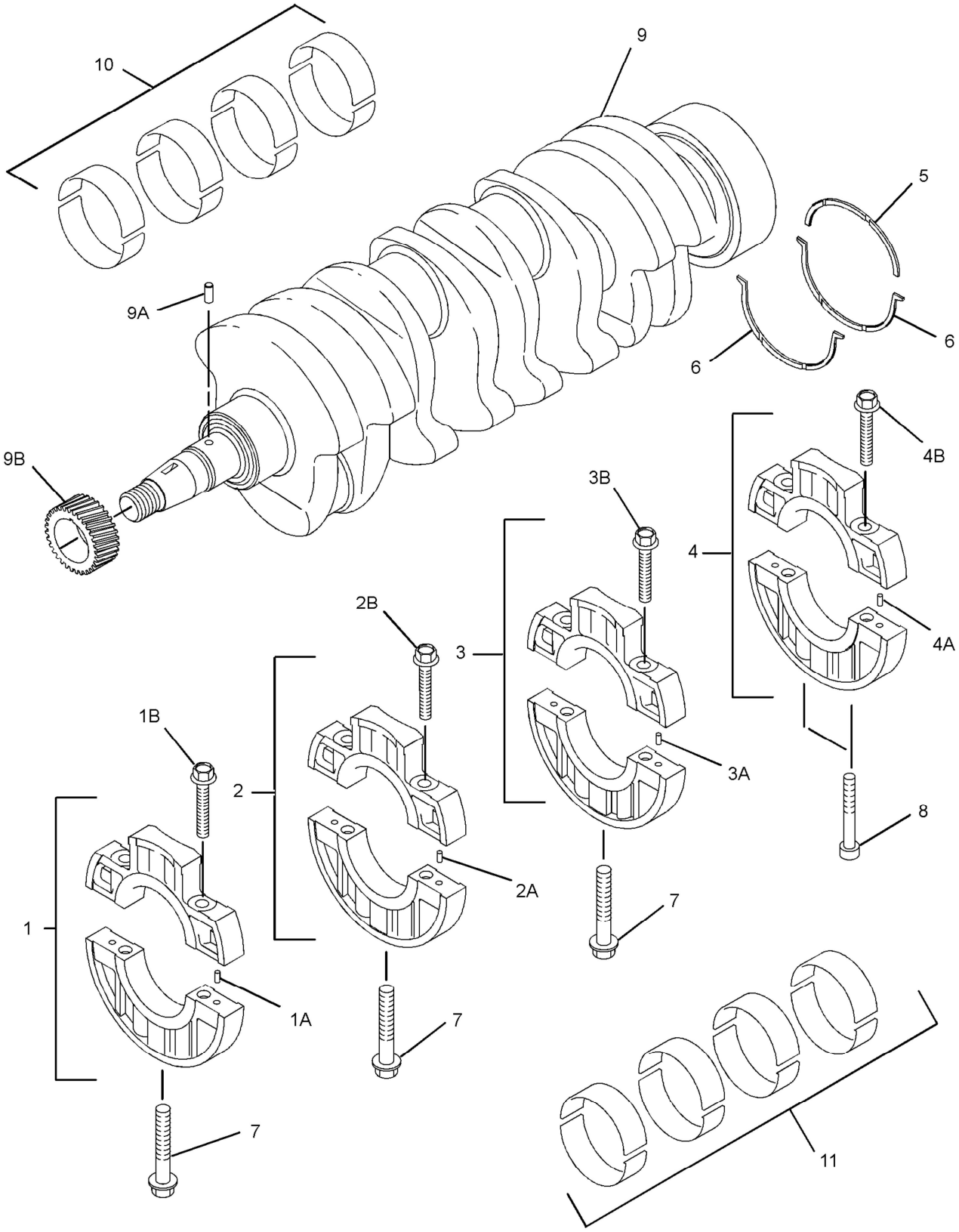

GRAPHIC #1 **<END>** g01406829

BASIC ENGINE

308-2281 CYLINDER BLOCK GP

SMCS-1201 **i03136391**

NOTE	REF NO	GRAPHIC REF	PART NUMBER	QTY	PART NAME 1 2 3 4 5 6 (PRODUCT LEVEL)	SEE PAGE
	1	1	**153-5387**	3	PLUG	
	2	1	**6B-0924**	1	BALL BEARING	
	3	1	**153-5391**	1	PLUG	
	4	1	**153-5394**	2	DOWEL	
	5	1	**153-5395**	2	DOWEL	
	6	1	**153-5396**	2	PIN	
	7	1	**153-5402**	2	DOWEL	
	8	1	**153-6838**	2	BOLT	
	9	1	**154-0175**	2	PLUG	
	10	1	**154-0176**	1	BUSHING	
	11	1	**154-0177**	1	BUSHING	
	12	1	**154-0178**	1	SEAL	
	13	1	**154-0393**	1	STUD	
	14	1	**183-1163**	1	STUD	
	15	1	**183-1164**	1	STUD	
	16	1	**215-2620**	1	GASKET	
	17	1	**217-5770**	3	PLUG	
	18	1	**221-1136**	4	PLUG	
	19	1	**237-9315**	2	PLUG (SEALING)	
	20	1	**237-9316**	5	PLUG (SEALING)	
	21	1	**294-4916**	1	BUSHING (STANDARD)	
B		1	**302-4181**	1	BUSHING (0.25-MM US)	
B		1	**302-4182**	1	BUSHING (0.50-MM US)	
	22	1	**308-1850**	1	SHAFT	
	24	1	**322-6874**	1	STUD	

B-USE AS REQUIRED

308-2281 **CYLINDER BLOCK GP** *(contd.)* **i03136391**

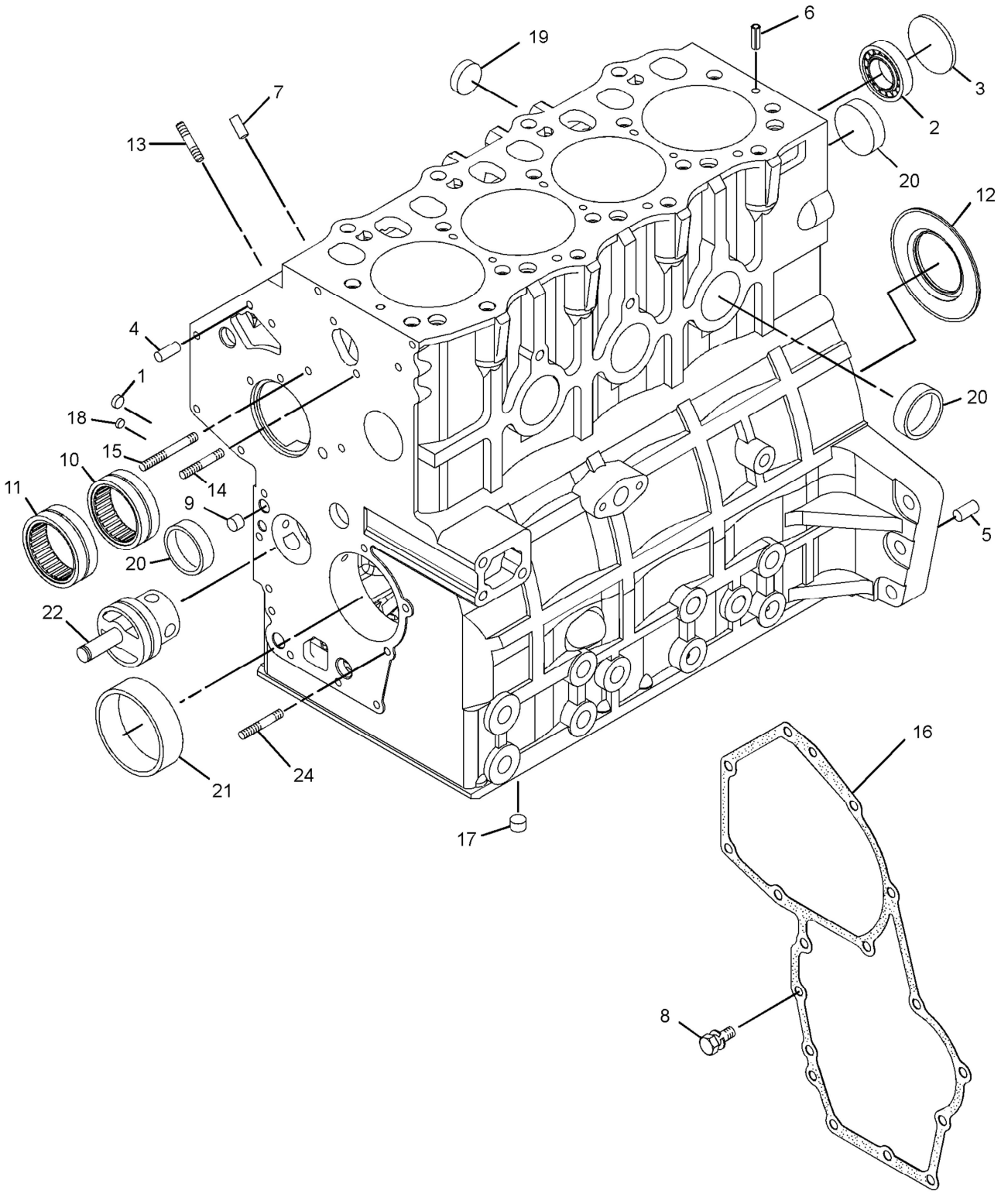

GRAPHIC #1 **<END>** g01618351

BASIC ENGINE

309-6712 CYLINDER BLOCK GP

SMCS-1201 **i03133548**

NOTE	REF NO	GRAPHIC REF	PART NUMBER	QTY	PART NAME 1 2 3 4 5 6 (PRODUCT LEVEL)	SEE PAGE
	1	1	**153-5387**	3	PLUG	
	2	1	**6B-0924**	1	BALL BEARING	
	3	1	**153-5391**	1	PLUG	
	4	1	**153-5394**	2	DOWEL	
	5	1	**153-5395**	2	DOWEL	
	6	1	**153-5396**	2	PIN	
	7	1	**153-5402**	2	DOWEL	
	8	1	**153-6838**	2	BOLT	
	9	1	**154-0175**	2	PLUG	
	10	1	**154-0176**	1	BUSHING	
	11	1	**154-0177**	1	BUSHING	
	12	1	**154-0178**	1	SEAL	
	13	1	**154-0393**	3	STUD	
	14	1	**183-1163**	1	STUD	
	15	1	**183-1164**	1	STUD	
	16	1	**215-2620**	1	GASKET	
	17	1	**217-5770**	3	PLUG	
	18	1	**221-1136**	4	PLUG	
	19	1	**237-9315**	2	PLUG (SEALING)	
	20	1	**237-9316**	5	PLUG (SEALING)	
	21	1	**294-4916**	1	BUSHING (STANDARD)	
AB		1	**302-4181**	1	BUSHING (0.25-MM US)	
AB		1	**302-4182**	1	BUSHING (0.50-MM US)	
	22	1	**308-1850**	1	SHAFT	
	24	1	**322-6874**	1	STUD	

A-NOT PART OF THIS GROUP
B-USE AS REQUIRED

309-6712 **CYLINDER BLOCK GP** ***(contd.)*** **i03133548**

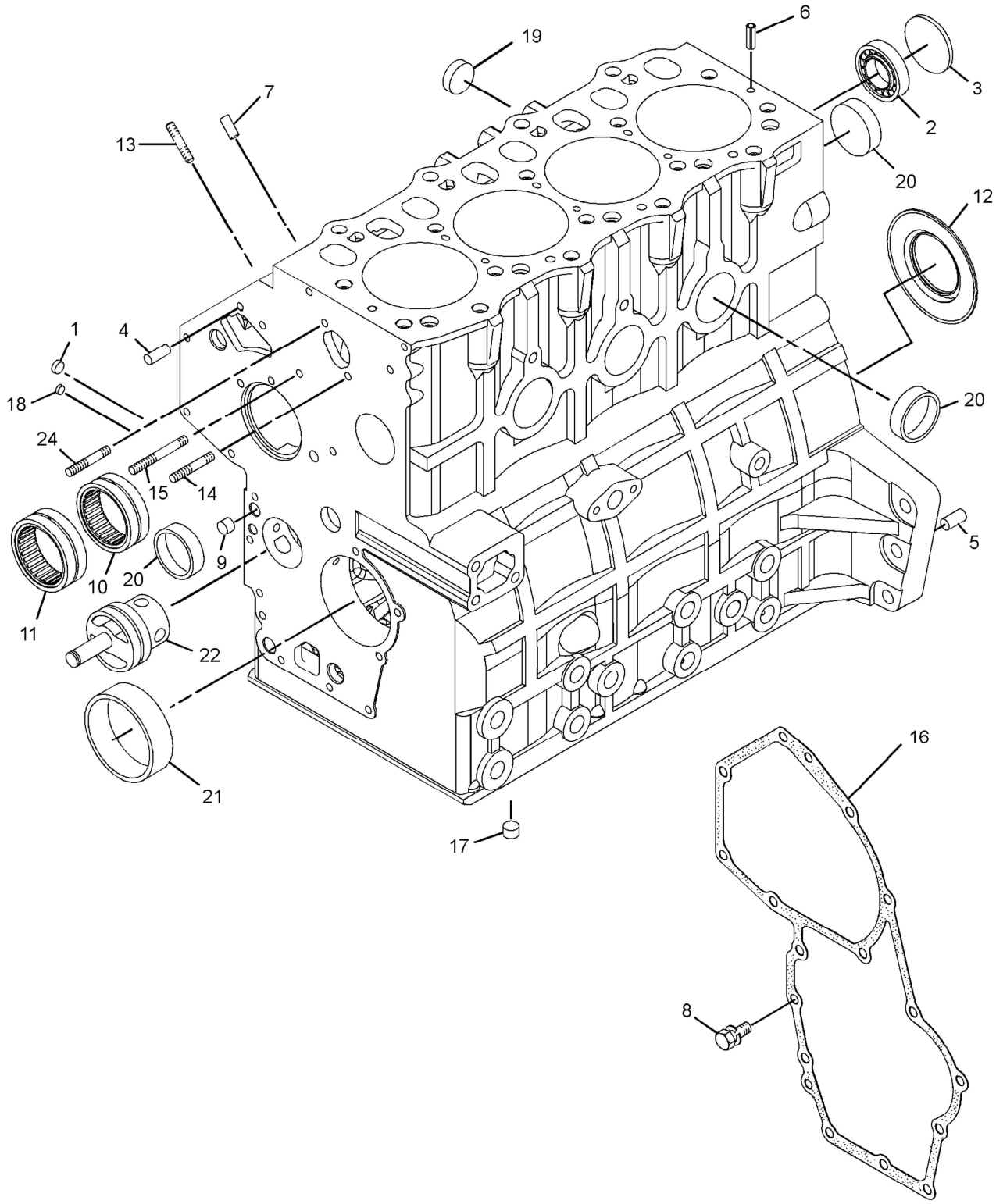

GRAPHIC #1 **<END>** g01635633

BASIC ENGINE

308-1859 CYLINDER HEAD AS

PART OF 308-2284 CYLINDER HEAD GP

SMCS-1100, 1101 **i02752395**

NOTE	REF NO	GRAPHIC REF	PART NUMBER	QTY	PART NAME 1 2 3 4 5 6 (PRODUCT LEVEL)	SEE PAGE
	1	1	**153-5554**	4	SEAL	
	2	1	**153-5556**	8	RETAINER	
	3	1	**153-5557**	8	CAP	
	4	1	**153-5558**	8	SPRING	
	5	1	**153-5559**	4	SEAL	
	6	1	**237-9315**	6	PLUG (SEALING)	
	7	1	**256-2084**	4	INSERT-INLET VALVE	
	8	1	**256-2085**	4	INSERT-EXHAUST VALVE	
	9	1	**288-6537**	7	CAP	
	10	1	**291-1808**	2	CAP	
	11	1	**303-0338**	3	PLUG	
	12	1	**308-1860**	4	VALVE-INLET	
	13	1	**308-1861**	4	VALVE-EXHAUST	

308-1859 **CYLINDER HEAD AS** *(contd.)* **i02752395**

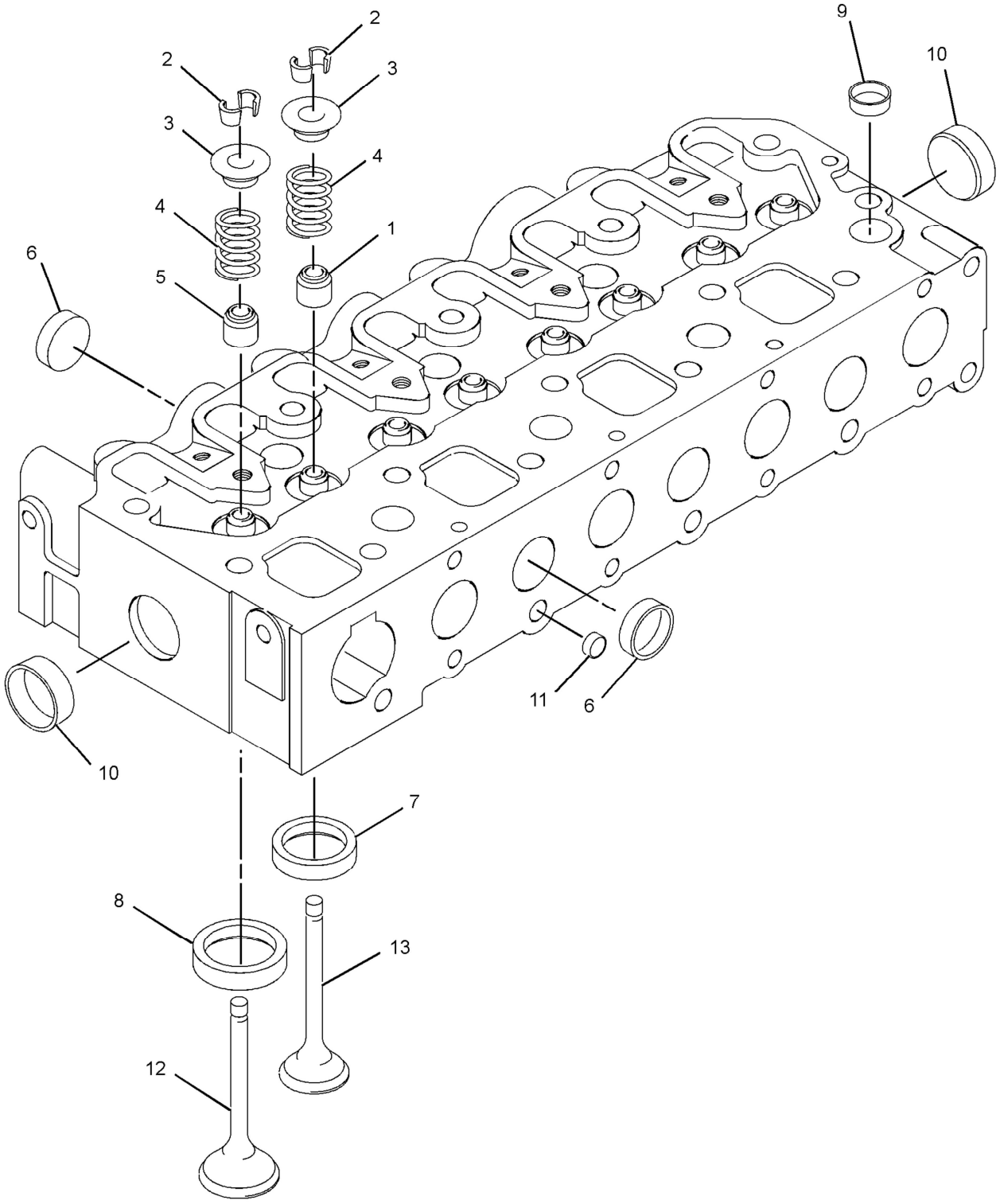

GRAPHIC #1 **<END>** g01418931

308-2284 CYLINDER HEAD GP

SMCS-1100 **i03137703**

NOTE	REF NO	GRAPHIC REF	PART NUMBER	QTY	PART NAME 1 2 3 4 5 6 (PRODUCT LEVEL)	SEE PAGE
	1	1	**322-7485**	8	CAP-VALVE SPRING	
	2	1	**156-6988**	14	BOLT	
	3	1	**156-6989**	4	BOLT	
	4	1	**183-3213**	4	STUD	
Y	5	1	**308-1859**	1	CYLINDER HEAD AS	47
	6	1	**308-1862**	2	STUD	
B	7	1	**322-7488**	1	GASKET (1.1-MM THK)	
B		1	**322-7487**	1	GASKET (1.2-MM THK)	
B		1	**322-7486**	1	GASKET (1.3-MM THK)	

B-USE AS REQUIRED
Y-SEPARATE ILLUSTRATION

308-2284 **CYLINDER HEAD GP** *(contd.)* **i03137703**

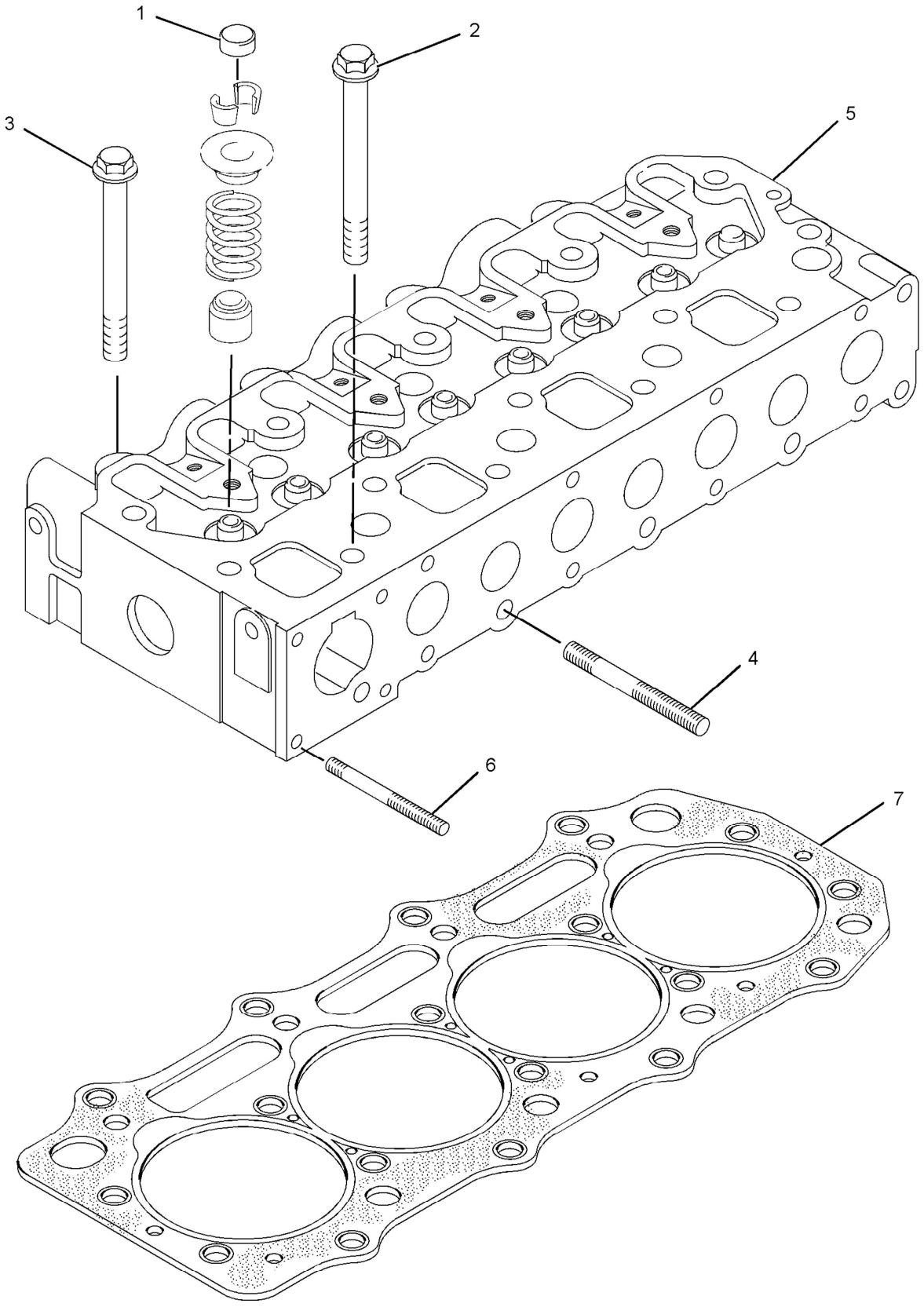

GRAPHIC #1 **<END>** g01409220

309-6715 CYLINDER HEAD GP

SMCS-1100 **i03133553**

NOTE	REF NO	GRAPHIC REF	PART NUMBER	QTY	PART NAME 1 2 3 4 5 6 (PRODUCT LEVEL)	SEE PAGE
	1	1	**322-7485**	8	CAP-VALVE SPRING	
	2	1	**156-6988**	14	BOLT	
	3	1	**156-6989**	4	BOLT	
	4	1	**183-3213**	2	STUD	
	5	1	**308-1862**	2	STUD	
Y	6	1	**321-4061**	1	CYLINDER HEAD GP	52
B	7	1	**308-1910**	1	GASKET (1.2-MM)	
B		1	**308-1911**	1	GASKET (1.3-MM)	

B-USE AS REQUIRED
Y-SEPARATE ILLUSTRATION

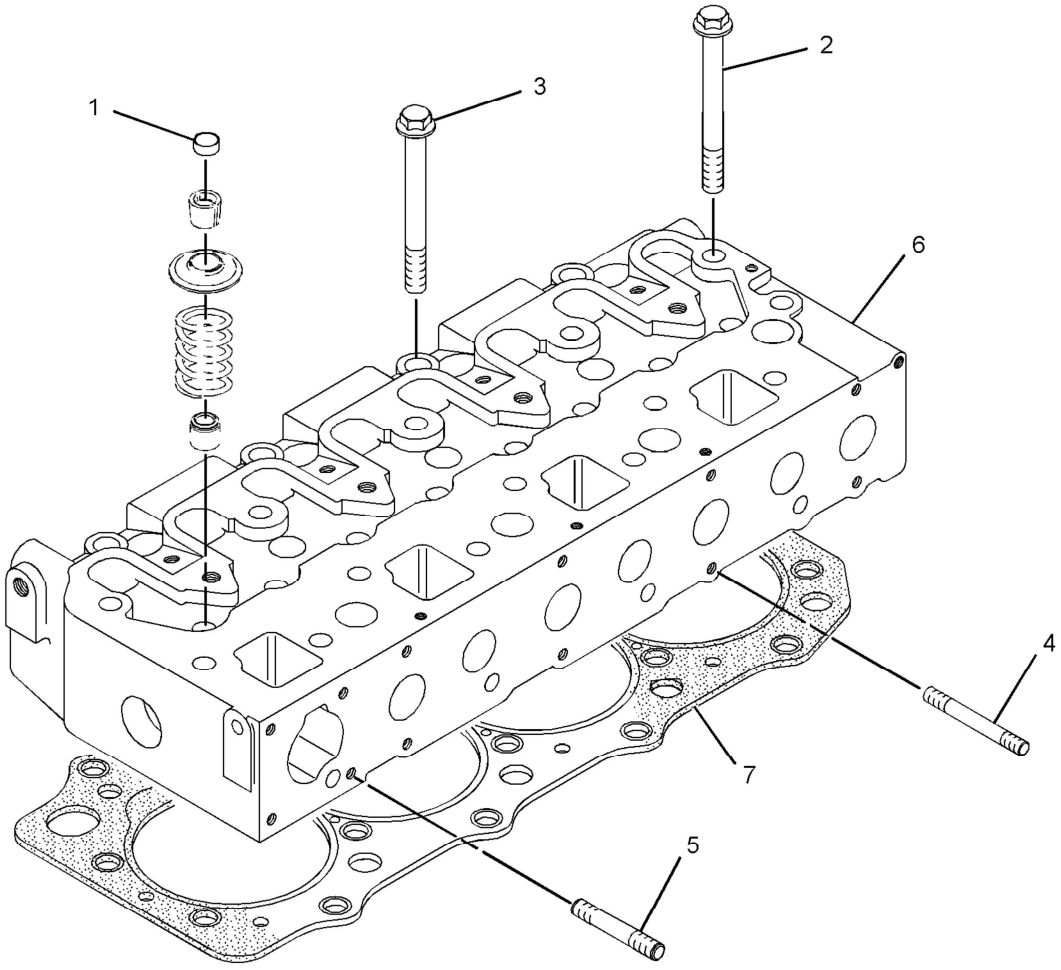

GRAPHIC #1 **<END>** g01394446

321-4061 CYLINDER HEAD GP

PART OF 309-6715 CYLINDER HEAD GP

SMCS-1100 **i02877614**

NOTE	REF NO	GRAPHIC REF	PART NUMBER	QTY	PART NAME 1 2 3 4 5 6 (PRODUCT LEVEL)	SEE PAGE
	1	1	**153-5554**	4	SEAL	
	2	1	**153-5556**	8	RETAINER	
	3	1	**153-5557**	8	CAP	
	4	1	**153-5558**	8	SPRING	
	5	1	**153-5559**	4	SEAL	
	6	1	**237-9315**	6	PLUG (SEALING)	
	7	1	**256-2084**	4	INSERT-INLET VALVE	
	8	1	**256-2085**	4	INSERT-EXHAUST VALVE	
	9	1	**288-6537**	7	CAP	
	10	1	**291-1808**	2	CAP	
	11	1	**303-0338**	3	PLUG	
	12	1	**308-1860**	4	VALVE-INLET	
	13	1	**308-1861**	4	VALVE-EXHAUST	

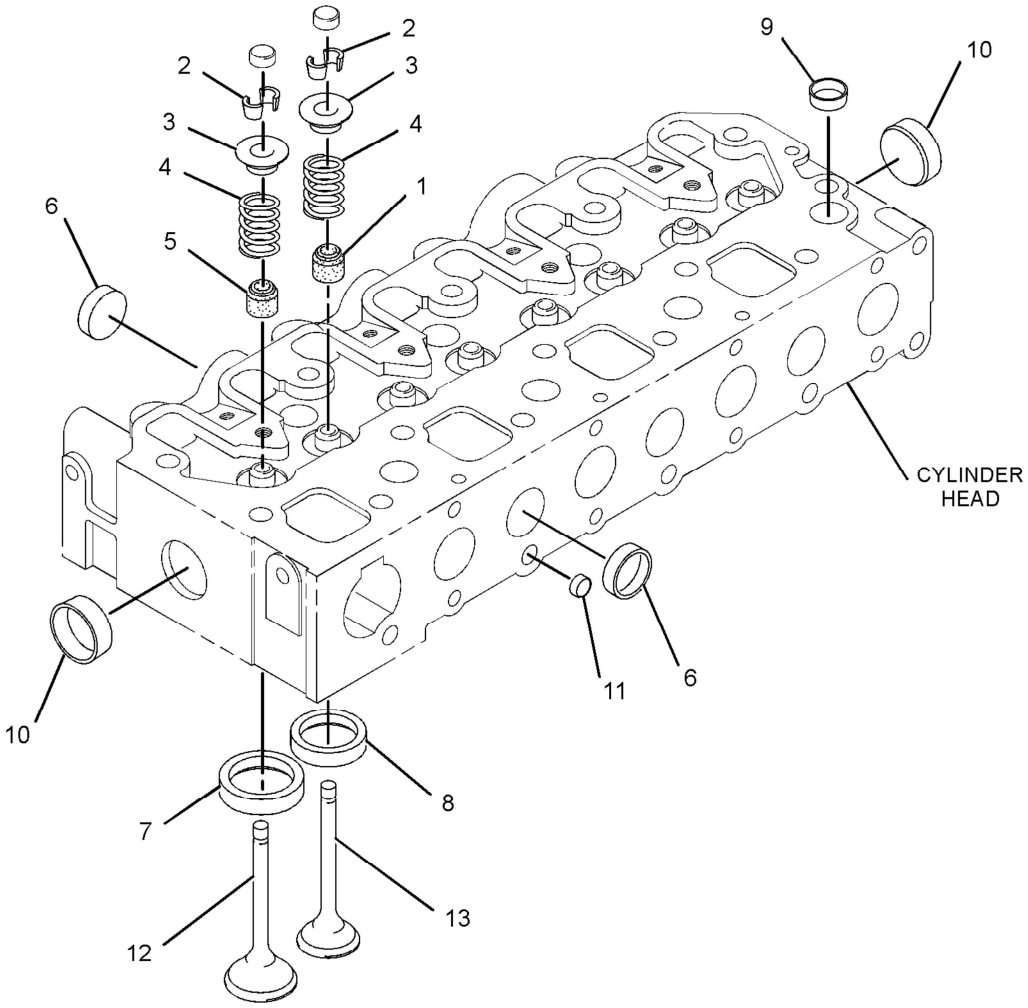

GRAPHIC #1 **<END>** g01395917

BASIC ENGINE

328-3296 DRIVE GP-FRONT

SMCS-1207, 3108 **i03115944**

NOTE	REF NO	GRAPHIC REF	PART NUMBER	QTY	PART NAME 1 2 3 4 5 6 (PRODUCT LEVEL)	SEE PAGE
	1	1	**6I-0594**	2	NUT (M10X1.15-THD)	
	2	1	**164-7468**	2	BOLT	
	3	1	**308-1874**	1	HOLDER	
	4	1	**308-1875**	3	SEAL-O-RING	
	5	1	**321-5907**	1	PLATE	
	6	1	**328-3229**	2	COVER	
	7	1	**328-3230**	2	BALL BEARING	
	8	1	**328-3299**	1	GEAR	

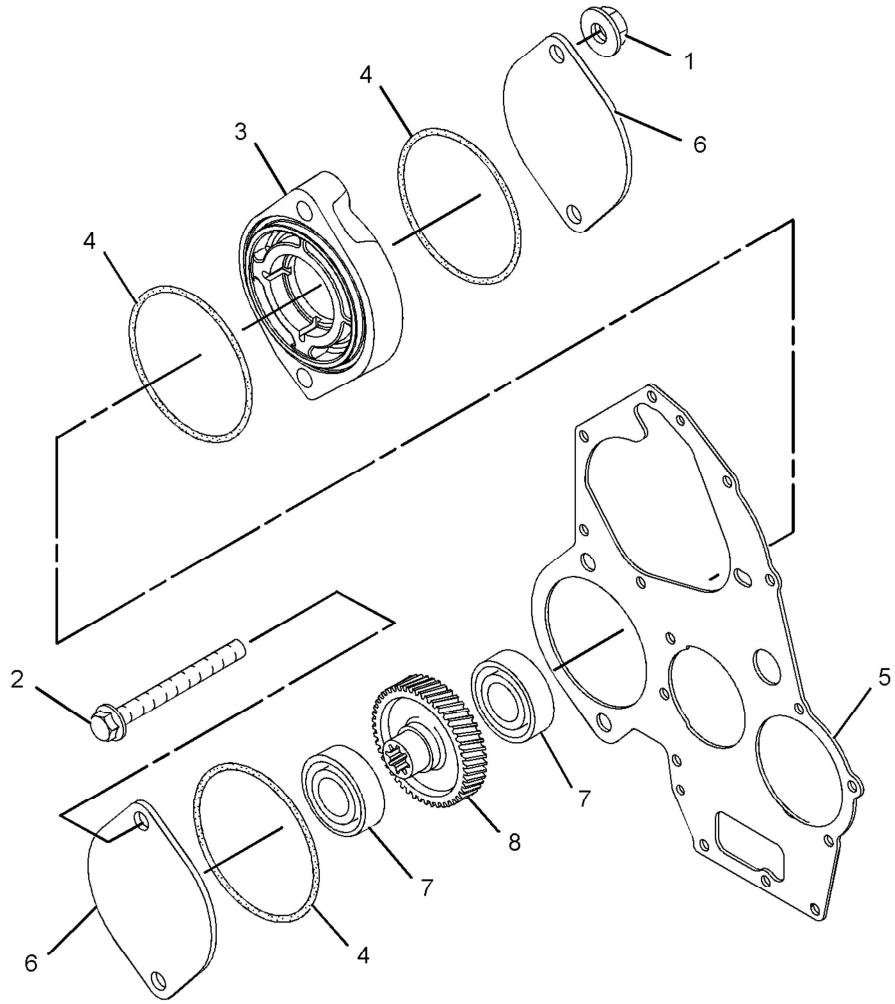

GRAPHIC #1 **<END>** g01644041

BASIC ENGINE

308-2304 DRIVE GP-FAN

SMCS-1359 **i02752273**

NOTE	REF NO	GRAPHIC REF	PART NUMBER	QTY	PART NAME 1 2 3 4 5 6 (PRODUCT LEVEL)	SEE PAGE
	1	1	**183-3546**	1	EXTENSION-FAN	
	2	1	**183-3547**	4	BOLT	

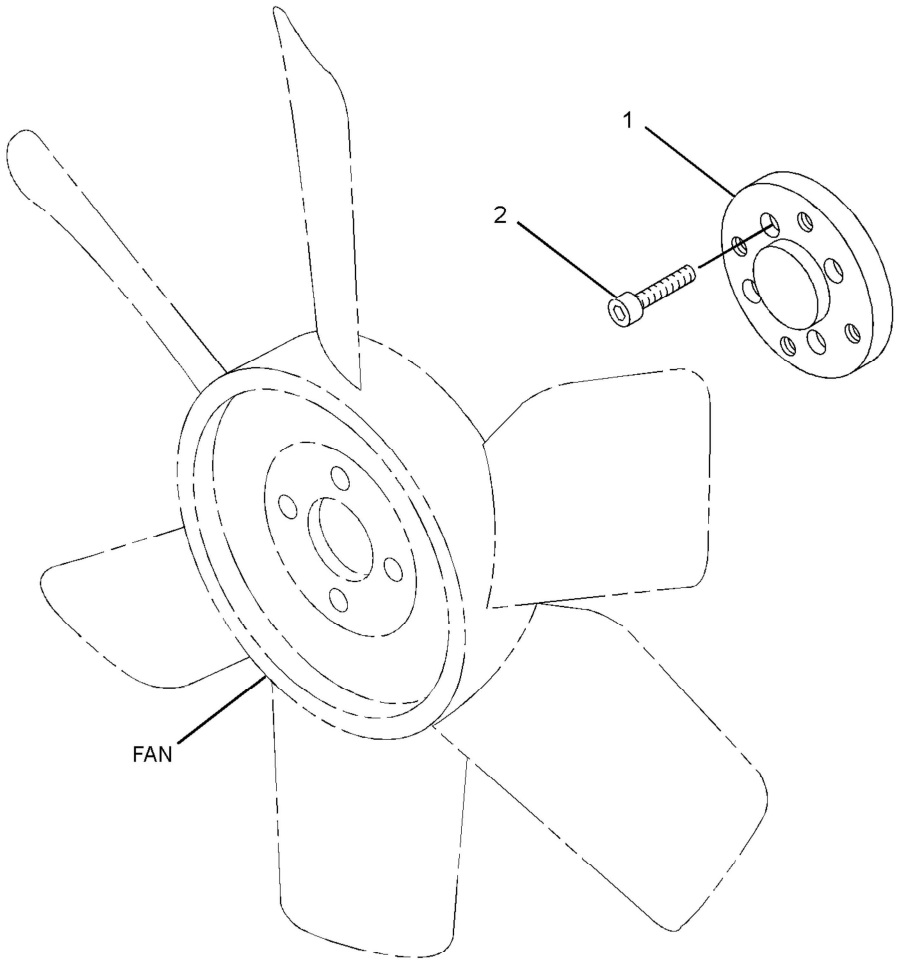

GRAPHIC #1 **<END>** g01419523

BASIC ENGINE

311-1119 DRIVE GP-FAN

SMCS-1359 **i02844817**

NOTE	REF NO	GRAPHIC REF	PART NUMBER	QTY	PART NAME 1 2 3 4 5 6 (PRODUCT LEVEL)	SEE PAGE
	1	1	**153-6861**	4	BOLT	
	2	1	**161-8260**	1	PLATE	

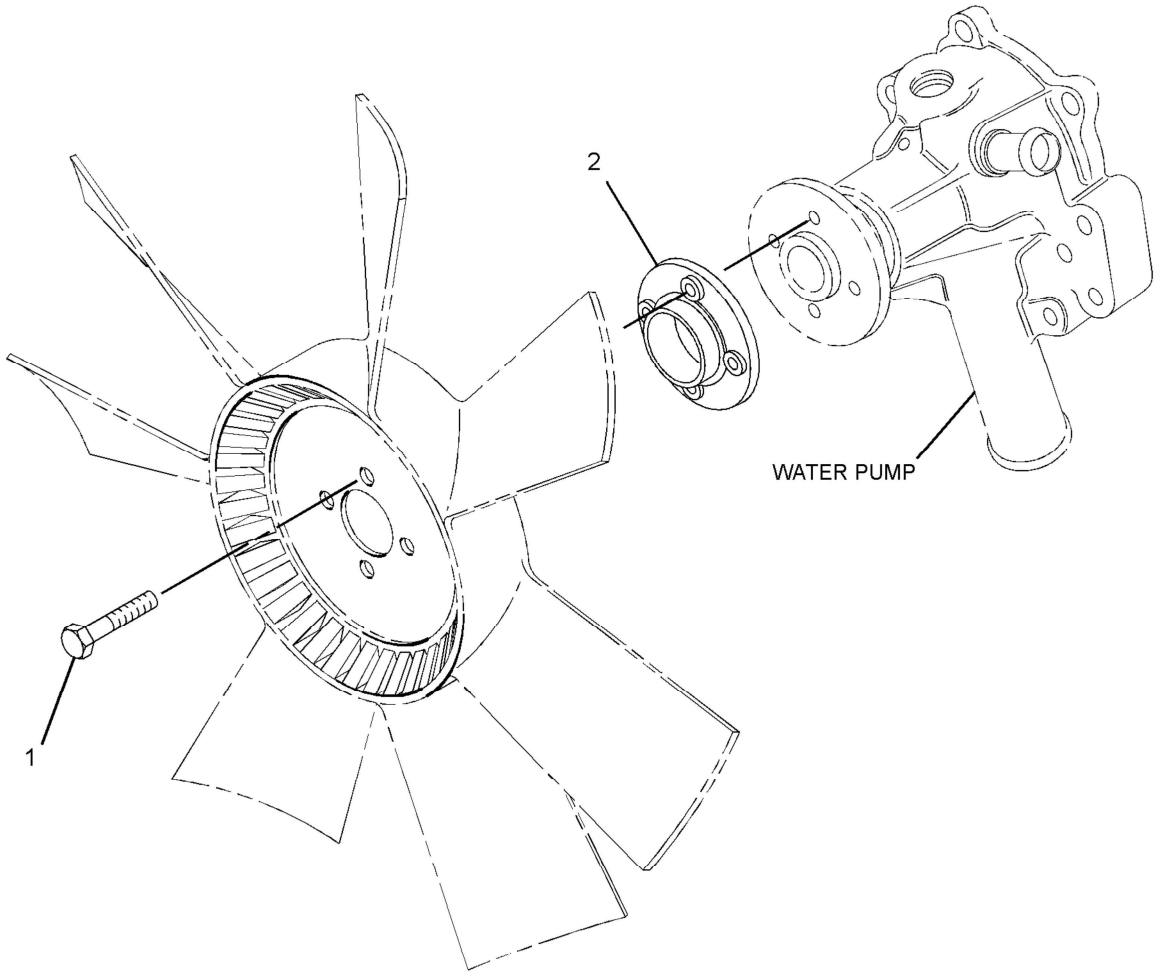

GRAPHIC #1 **<END>** g01419563

BASIC ENGINE

325-5669 DRIVE GP-FAN

SMCS-1359 **i02962250**

NOTE	REF NO	GRAPHIC REF	PART NUMBER	QTY	PART NAME 1 2 3 4 5 6 (PRODUCT LEVEL)	SEE PAGE
	1	1	**153-6856**	4	BOLT	
	2	1	**207-3697**	1	EXTENSION	

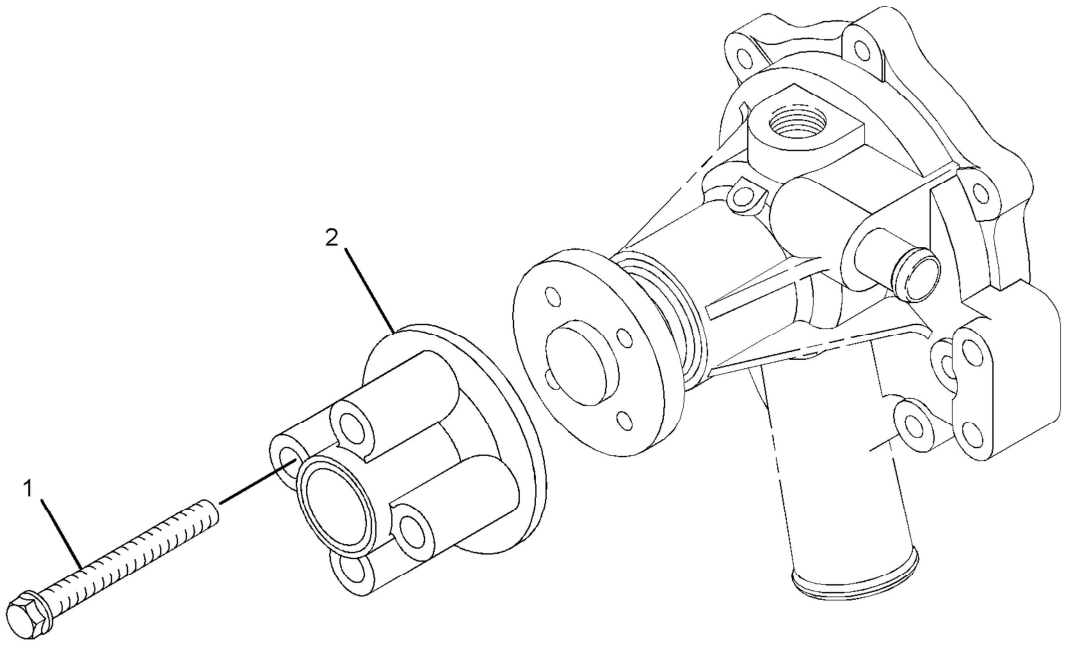

GRAPHIC #1 **<END>** g01538533

BASIC ENGINE

308-2291 FLYWHEEL GP

SMCS-1156 **i02992341**

NOTE	REF NO	GRAPHIC REF	PART NUMBER	QTY	PART NAME 1 2 3 4 5 6 (PRODUCT LEVEL)	SEE PAGE
	1	1	**327-5154**	1	FLYWHEEL GP	
	1A	1	**154-2405**	1	GEAR-STARTER (126-TEETH)	
	2	1	**154-2406**	6	BOLT	

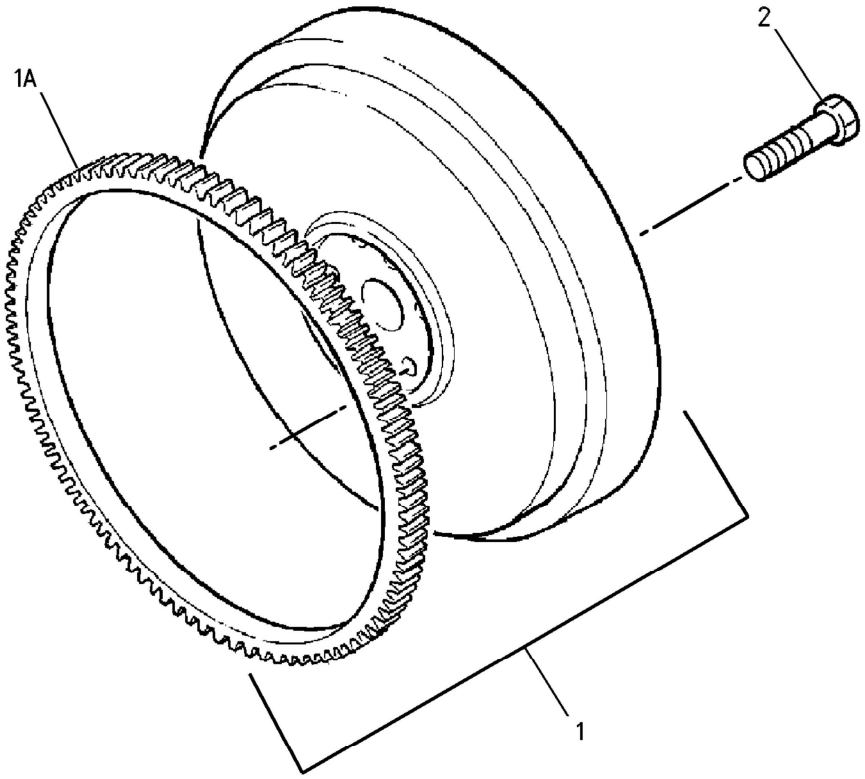

GRAPHIC #1 **<END>** g00640776

BASIC ENGINE

311-1884 FLYWHEEL GP

SMCS-1156 **i02990545**

NOTE	REF NO	GRAPHIC REF	PART NUMBER	QTY	PART NAME 1 2 3 4 5 6 (PRODUCT LEVEL)	SEE PAGE
	1	1	**326-5052**	1	FLYWHEEL GP	
	1A	1	**154-2405**	1	GEAR-STARTER (126-TEETH)	
	2	1	**154-2406**	6	BOLT	

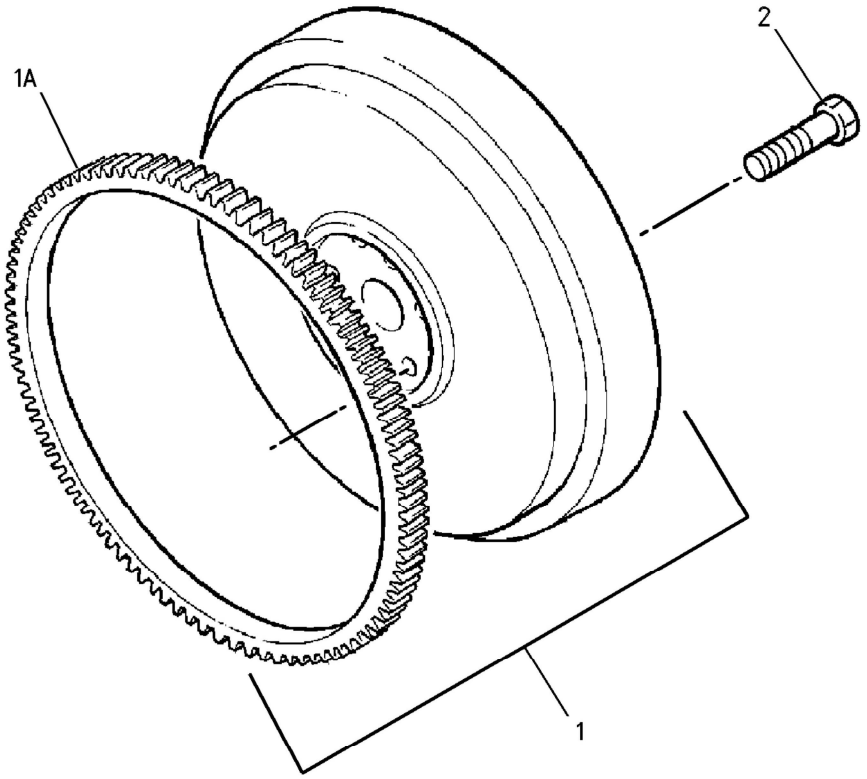

GRAPHIC #1 **<END>** g00640766

BASIC ENGINE

317-0586 FLYWHEEL GP

SMCS-1156 **i02996902**

NOTE	REF NO	GRAPHIC REF	PART NUMBER	QTY	PART NAME 1 2 3 4 5 6 (PRODUCT LEVEL)	SEE PAGE
	1	1	**327-5241**	1	FLYWHEEL GP	
	1A	1	**154-2405**	1	GEAR-STARTER (126-TEETH)	
	2	1	**154-2406**	6	BOLT	

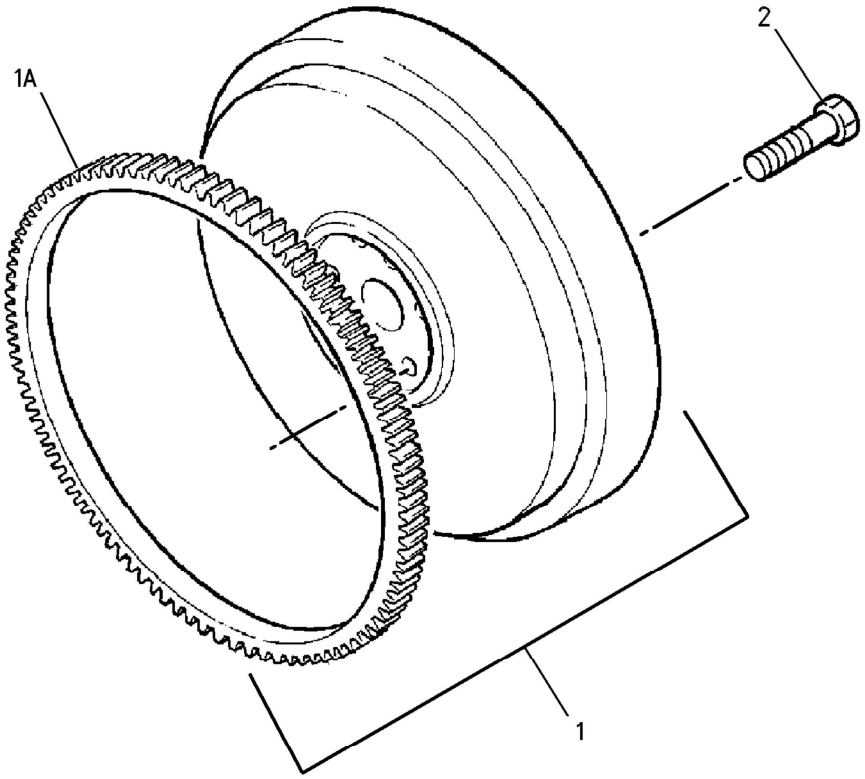

GRAPHIC #1 **<END>** g00640766

BASIC ENGINE

322-2412 FLYWHEEL GP

SMCS-1156 **i02908402**

NOTE	REF NO	GRAPHIC REF	PART NUMBER	QTY	PART NAME 1 2 3 4 5 6 (PRODUCT LEVEL)	SEE PAGE
	1	1	**154-2406**	6	BOLT	

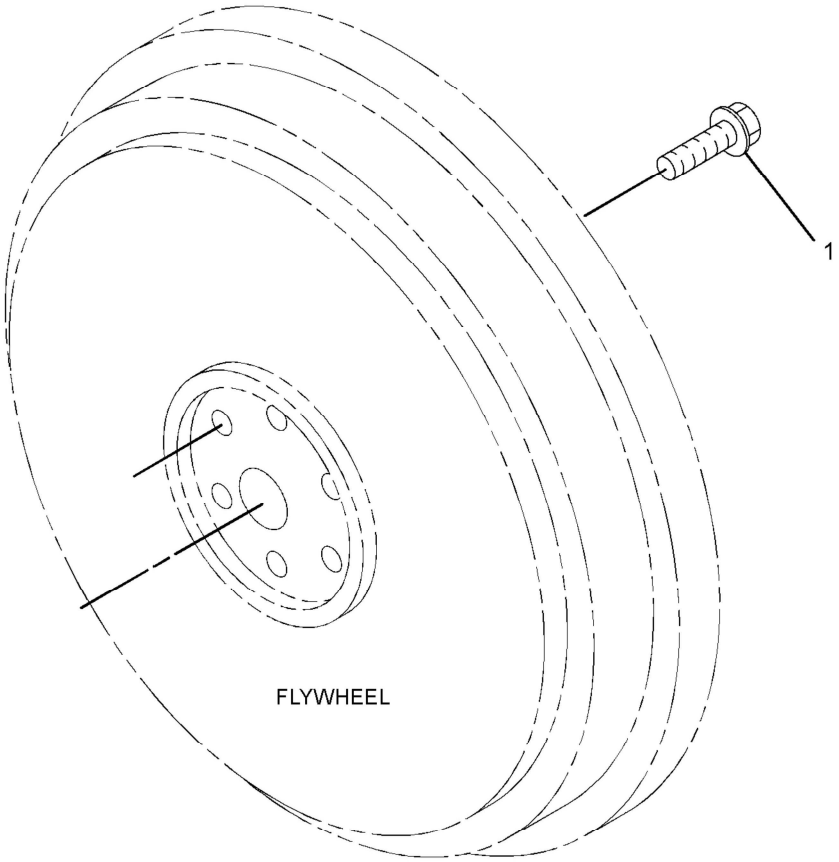

GRAPHIC #1 **<END>** g01640274

325-5668 FLYWHEEL GP

SMCS-1156 **i02962244**

NOTE	REF NO	GRAPHIC REF	PART NUMBER	QTY	PART NAME 1 2 3 4 5 6 (PRODUCT LEVEL)	SEE PAGE
	1	1	**154-2406**	6	BOLT	
	2	1	**325-5672**	1	FLYWHEEL GP	
	2A	1	**154-2405**	1	GEAR-STARTER (126-TEETH)	

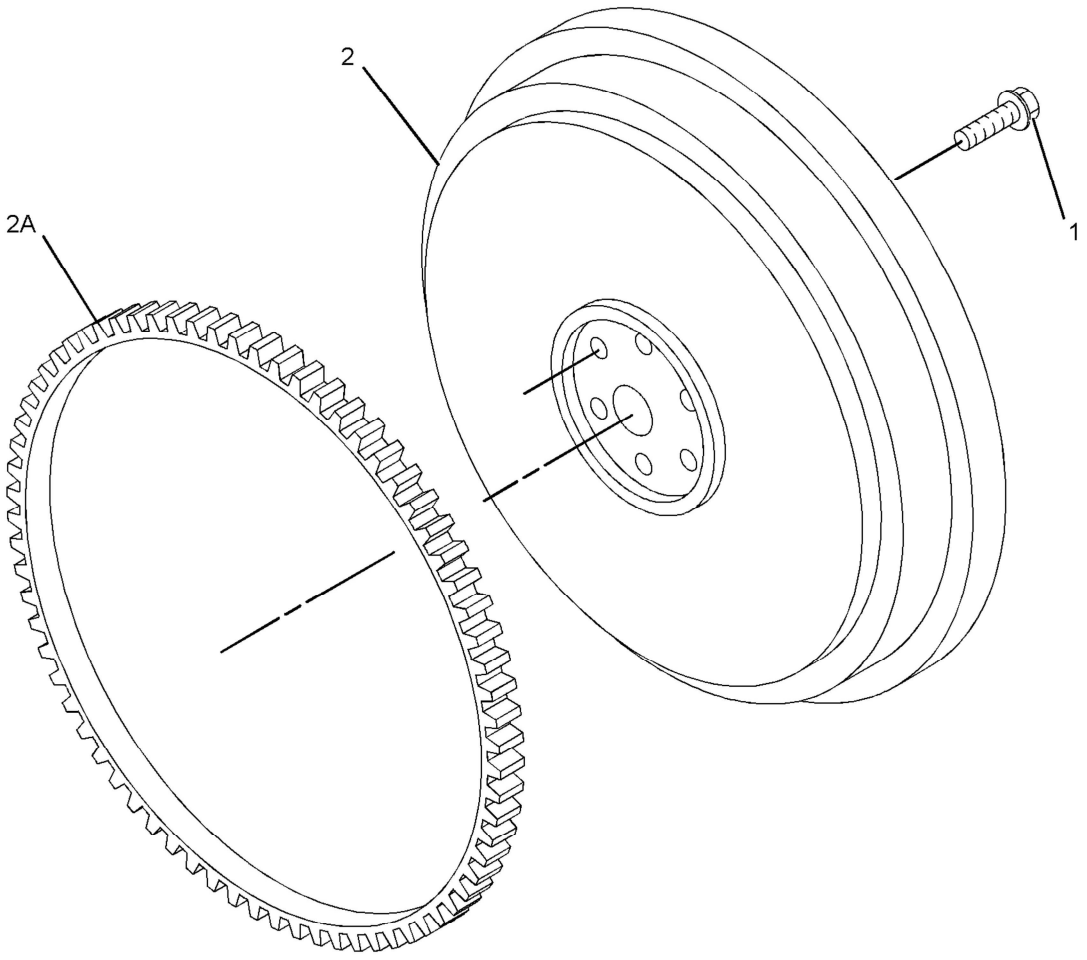

GRAPHIC #1 **<END>** g01538394

BASIC ENGINE

327-7632 FLYWHEEL GP

SMCS-1156 **i03085937**

NOTE	REF NO	GRAPHIC REF	PART NUMBER	QTY	PART NAME 1 2 3 4 5 6 (PRODUCT LEVEL)	SEE PAGE
	1	1	**327-5608**	1	FLYWHEEL GP	
	1A	1	**154-2405**	1	GEAR-STARTER (126-TEETH)	
	2	1	**154-2406**	6	BOLT	

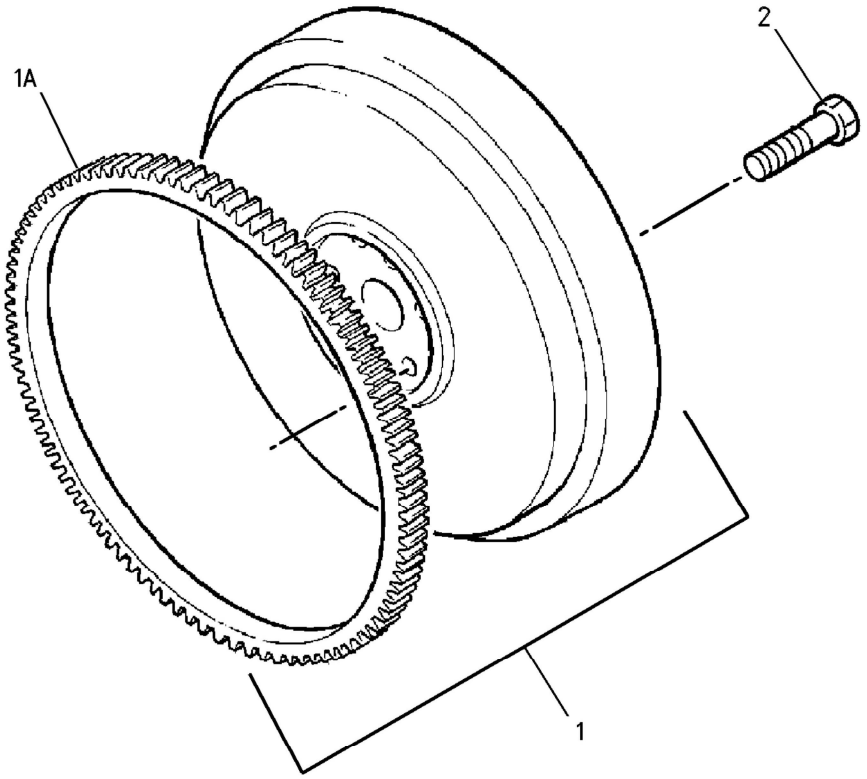

GRAPHIC #1 **<END>** g00640766

308-2290 HOUSING GP-FLYWHEEL

SMCS-1157 **i02877263**

NOTE	REF NO	GRAPHIC REF	PART NUMBER	QTY	PART NAME 1 2 3 4 5 6 (PRODUCT LEVEL)	SEE PAGE
	1	1	**138-7162**	6	BOLT	
	2	1	**138-7401**	1	HOUSING-FLYWHEEL	
	3	1	**252-1802**	6	BOLT	
	4	1	**153-6375**	10	BOLT	
	5	1	**153-6868**	2	BOLT	
	6	1	**154-1399**	2	WASHER	
	7	1	**154-2394**	1	PLATE	
	8	1	**154-2395**	1	PLUG	
	9	1	**154-2403**	6	WASHER	
	10	1	**165-2142**	2	BOLT	
	11	1	**166-2338**	4	NUT	

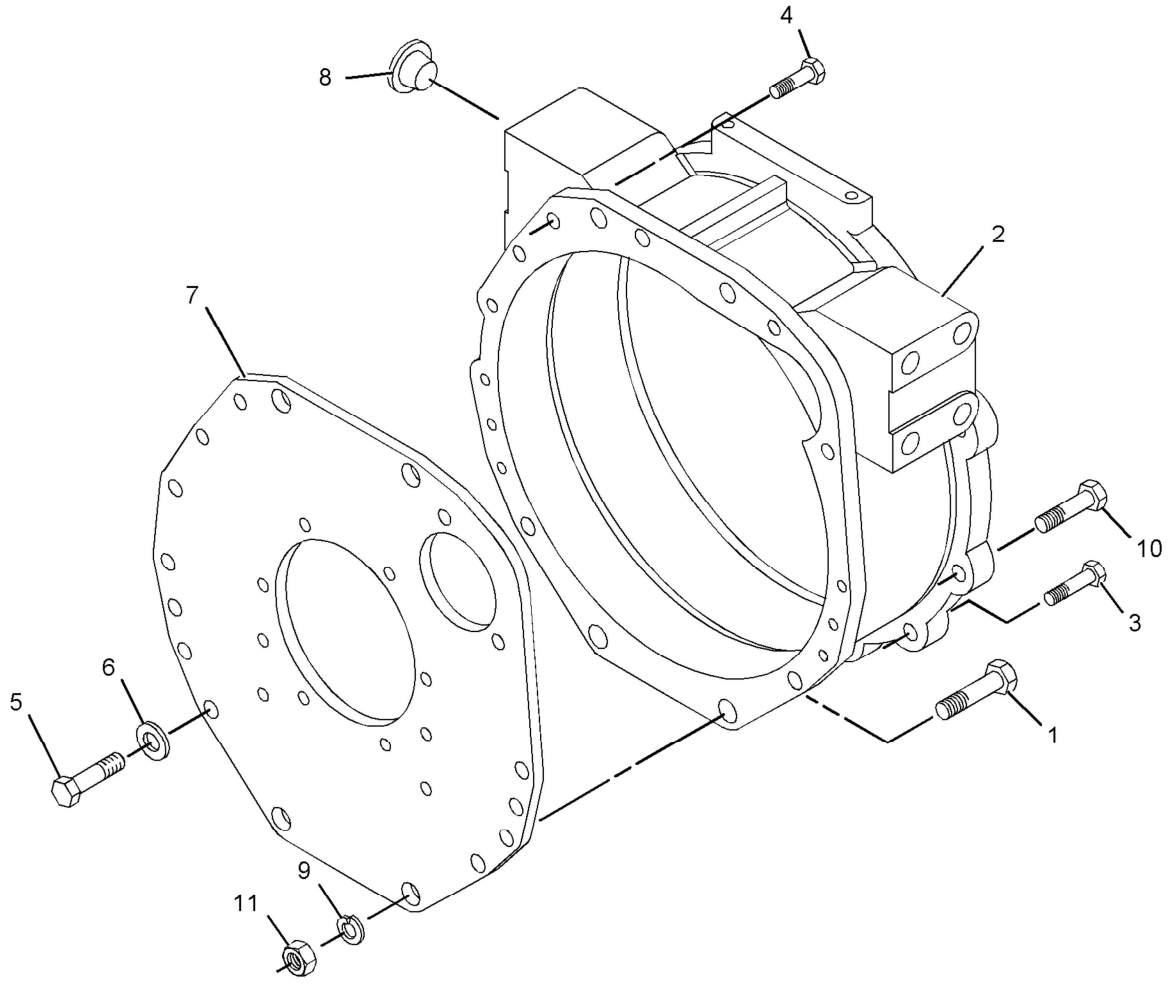

GRAPHIC #1 **<END>** g01140728

BASIC ENGINE

311-1883 HOUSING GP-FLYWHEEL

SMCS-1157 **i02812238**

NOTE	REF NO	GRAPHIC REF	PART NUMBER	QTY	PART NAME 1 2 3 4 5 6 (PRODUCT LEVEL)	SEE PAGE
	1	1	**138-7162**	2	BOLT	
	2	1	**138-7171**	2	BOLT	
	3	1	**153-6375**	10	BOLT	
	4	1	**154-1399**	2	WASHER	
	5	1	**154-2394**	1	PLATE	
	6	1	**154-2403**	2	WASHER	
	7	1	**155-8085**	2	NUT	

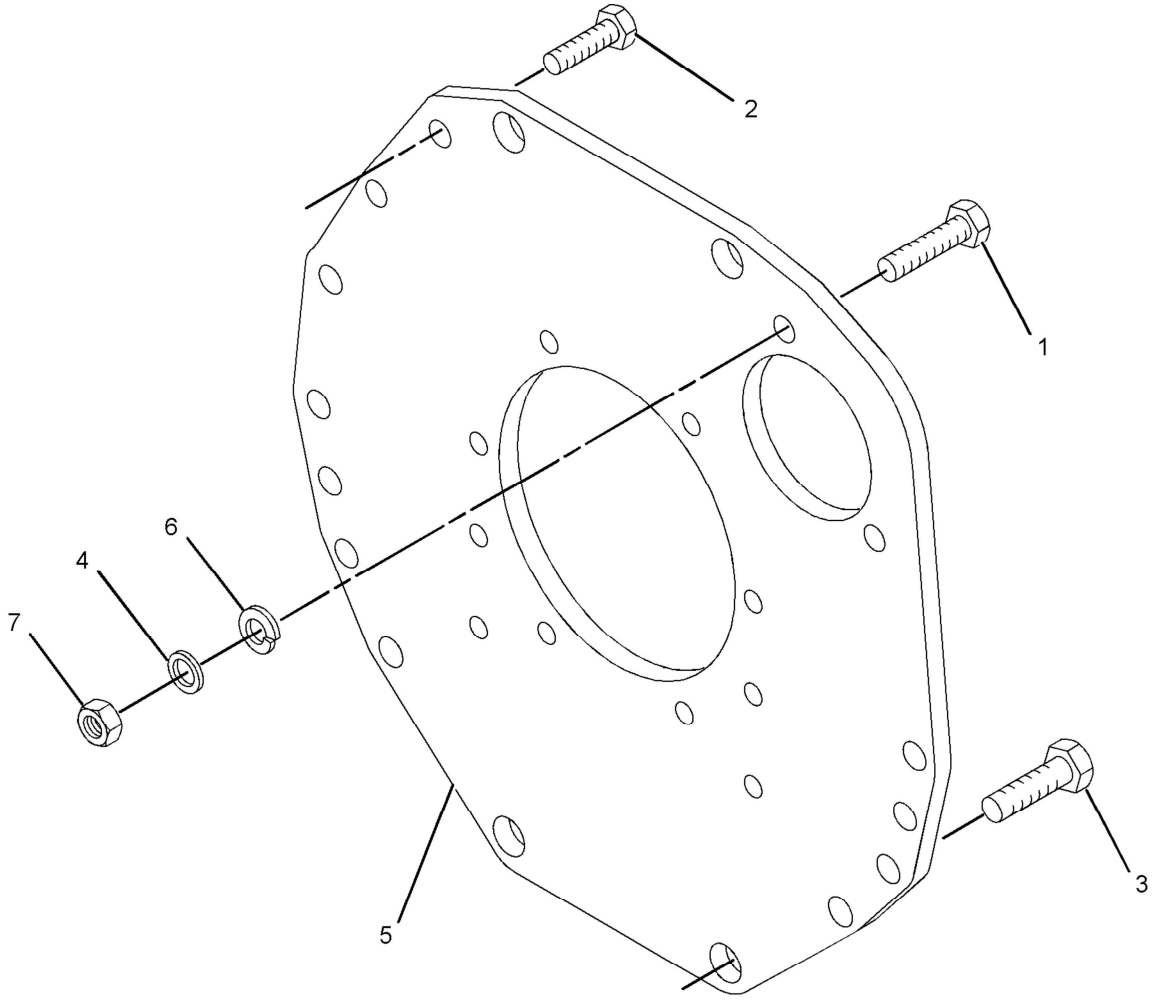

GRAPHIC #1 **<END>** g01414247

BASIC ENGINE

317-0588 HOUSING GP-FLYWHEEL

SMCS-1157 **i02811999**

NOTE	REF NO	GRAPHIC REF	PART NUMBER	QTY	PART NAME 1 2 3 4 5 6 (PRODUCT LEVEL)	SEE PAGE
	1	1	**138-7162**	6	BOLT	
	2	1	**252-1802**	6	BOLT	
	3	1	**153-6375**	10	BOLT	
	4	1	**153-6868**	2	BOLT	
	5	1	**154-1399**	2	WASHER	
	6	1	**154-2394**	1	PLATE	
	7	1	**154-2395**	2	PLUG	
	8	1	**154-2403**	6	WASHER	
	9	1	**165-2142**	2	BOLT	
	10	1	**166-2338**	4	NUT	
	11	1	**318-5011**	1	HOUSING-FLYWHEEL	

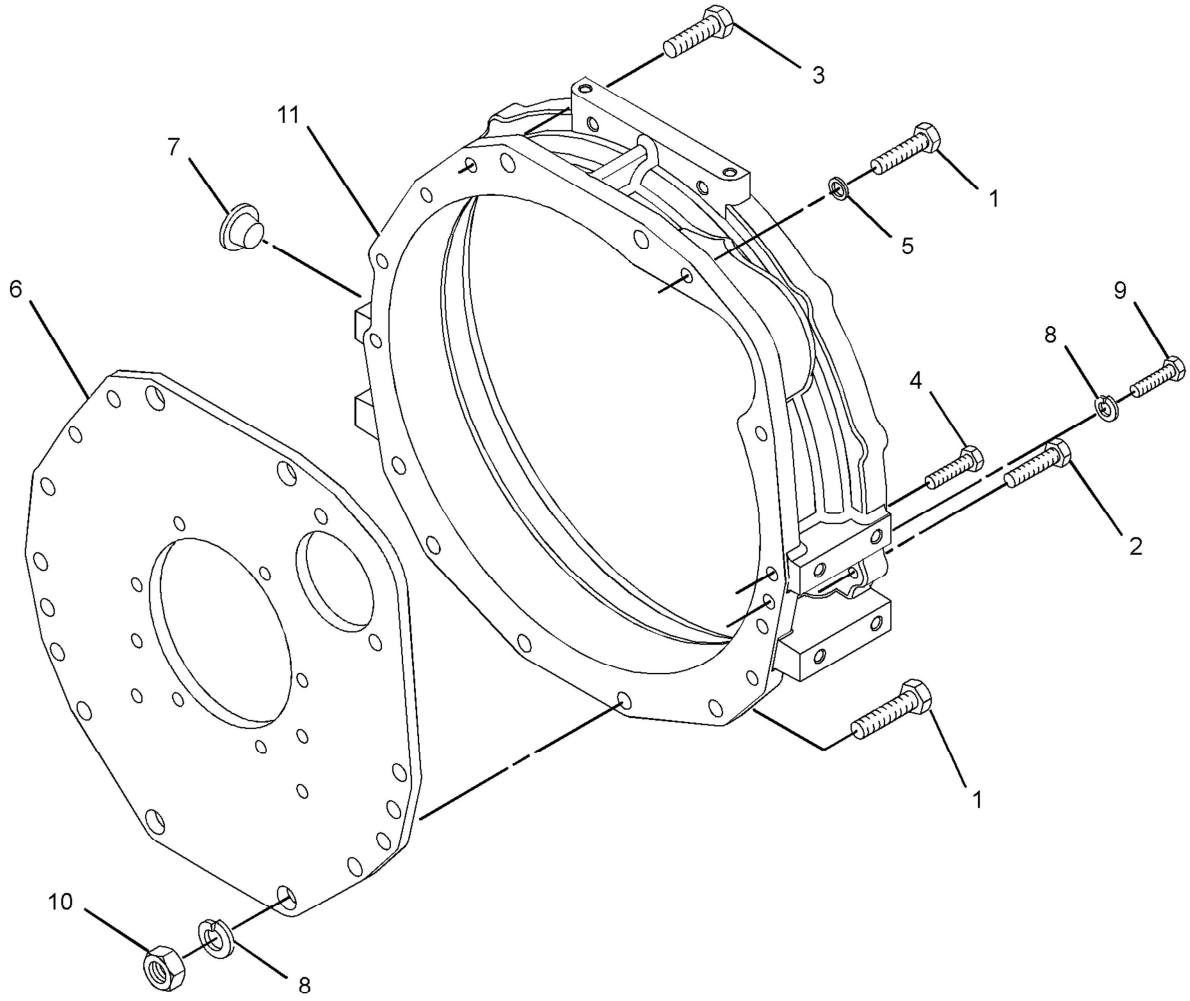

GRAPHIC #1 **<END>** g01414805

BASIC ENGINE

308-2288 HOUSING GP-FRONT

SMCS-1151, 1162, 1206 **i03126105**

NOTE	REF NO	GRAPHIC REF	PART NUMBER	QTY	PART NAME 1 2 3 4 5 6 (PRODUCT LEVEL)	SEE PAGE
	1	1	**153-5960**	2	NUT	
	2	1	**153-5962**	4	BOLT	
	3	1	**154-1673**	1	PIN	
	4	1	**154-1675**	1	SEAL	
	5	1	**165-2140**	7	BOLT	
	6	1	**308-1871**	1	GASKET	
	7	1	**311-0656**	1	CASE	

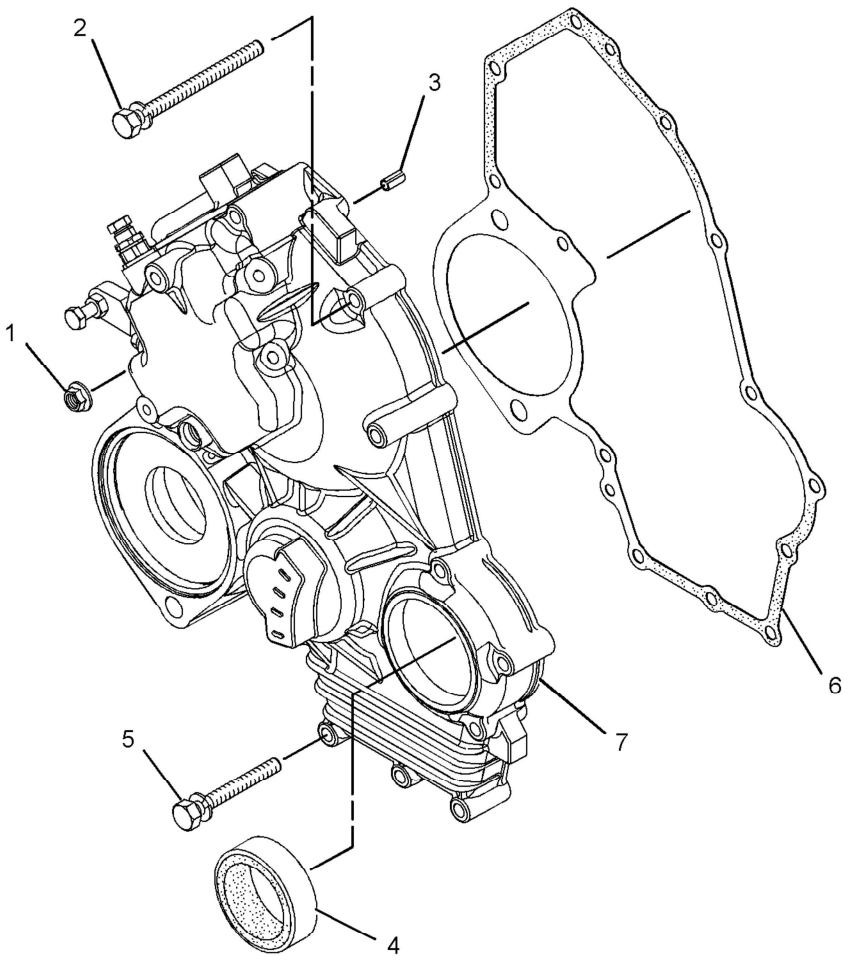

GRAPHIC #1 **<END>** g01626209

BASIC ENGINE

308-3329 HOUSING GP-FRONT

SMCS-1151, 1162, 1206 **i02861684**

NOTE	REF NO	GRAPHIC REF	PART NUMBER	QTY	PART NAME 1 2 3 4 5 6 (PRODUCT LEVEL)	SEE PAGE
	1	1	**6I-0846**	1	BOLT (M6X1X14-MM)	
M	2	2	**5C-2890**	1	NUT (M6X1-THD)	
	3	2	**139-5511**	1	CAP (TAMPER RESISTANT)	
	4	2	**153-5592**	1	NUT	
	5	1	**153-5960**	2	NUT	
	6	1	**153-5962**	4	BOLT	
	7	1,2	**153-6415**	3	WASHER	
	8	3	**153-6838**	2	BOLT	
	9	2	**153-7983**	1	PIN	
	10	2	**154-1403**	1	SEAL-O-RING	
	11	1	**154-1673**	1	PIN	
	12	1	**154-1675**	1	SEAL	
	13	3	**154-1680**	1	PLATE	
	14	2	**154-2715**	1	WASHER	
M	15	2	**8T-4971**	2	BOLT (M6X1X30-MM)	
	16	2	**162-2207**	1	NUT	
	17	1	**165-2140**	7	BOLT	
	18	2	**183-3538**	4	BOLT	
	19	2	**217-7115**	1	CAP (TAMPER RESISTANT)	
	20	1	**308-1871**	1	GASKET	
	21	1	**308-1874**	1	HOLDER	
	22	1	**308-1875**	1	SEAL-O-RING	
	23	2	**308-1877**	1	BRACKET	
	24	2	**308-1878**	1	GASKET	
	25	2	**308-1882**	1	SPRING	
	26	2	**308-1889**	1	NUT	
	27	2	**308-1892**	1	NUT	
	28	2	**308-1901**	1	CAP	
	29	3	**308-1902**	1	CAMSHAFT AS	
	29A	3	**153-6492**	1	KEY-WOODRUFF	
	29B	3	**154-4505**	1	BEARING	
	29C	3	**308-1903**	1	GEAR-CAMSHAFT (66-TEETH) (66-TEETH)	
	29D	3	**313-9323**	1	SPACER	
	30	3	**308-1904**	1	SLIDER	
	31	2	**308-4266**	1	SHAFT	
	32	2	**309-6728**	1	SHAFT	
	33	2	**309-6732**	1	BOLT	
	34	2	**311-0655**	1	SPRING	
	35	1	**322-7490**	1	HOUSING-FRONT	
	36	2	**313-5832**	1	BOLT AS	
	36A	2	**153-7987**	1	WASHER	
	36B	2	**191-9297**	1	NUT	
	36C	2	**313-5833**	1	SPRING	
	37	2	**317-7195**	1	SPRING	
	38	2	**319-3253**	1	SENSOR-SPEED	
	39	2	**321-4249**	1	NUT	
	40	2	**332-1361**	1	CAP-PROTECTION	
	41	2	**334-0732**	1	ARM (FRONT HOUSING)	
	42	2	**322-7492**	1	LEVER-CONTROL	
	43	2	**322-7493**	1	LEVER-CONTROL	
	44	2	**308-1897**	2	RING	
F			**154-1396**	1	CLIP	

F-NOT SHOWN
M-METRIC PART

308-3329 **HOUSING GP-FRONT** *(contd.)* **i02861684**

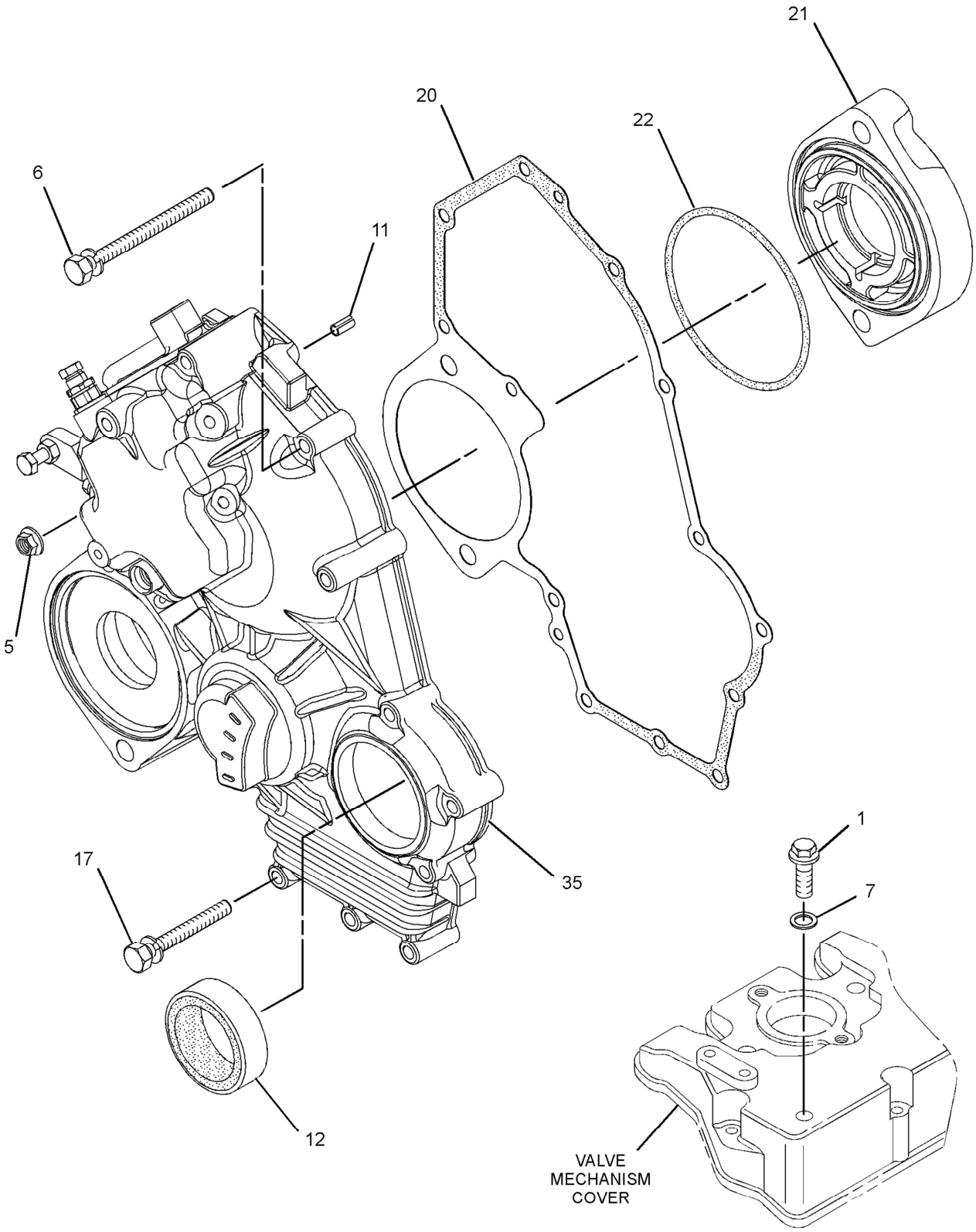

GRAPHIC #1

g01635016

308-3329 **HOUSING GP-FRONT** *(contd.)* **i02861684**

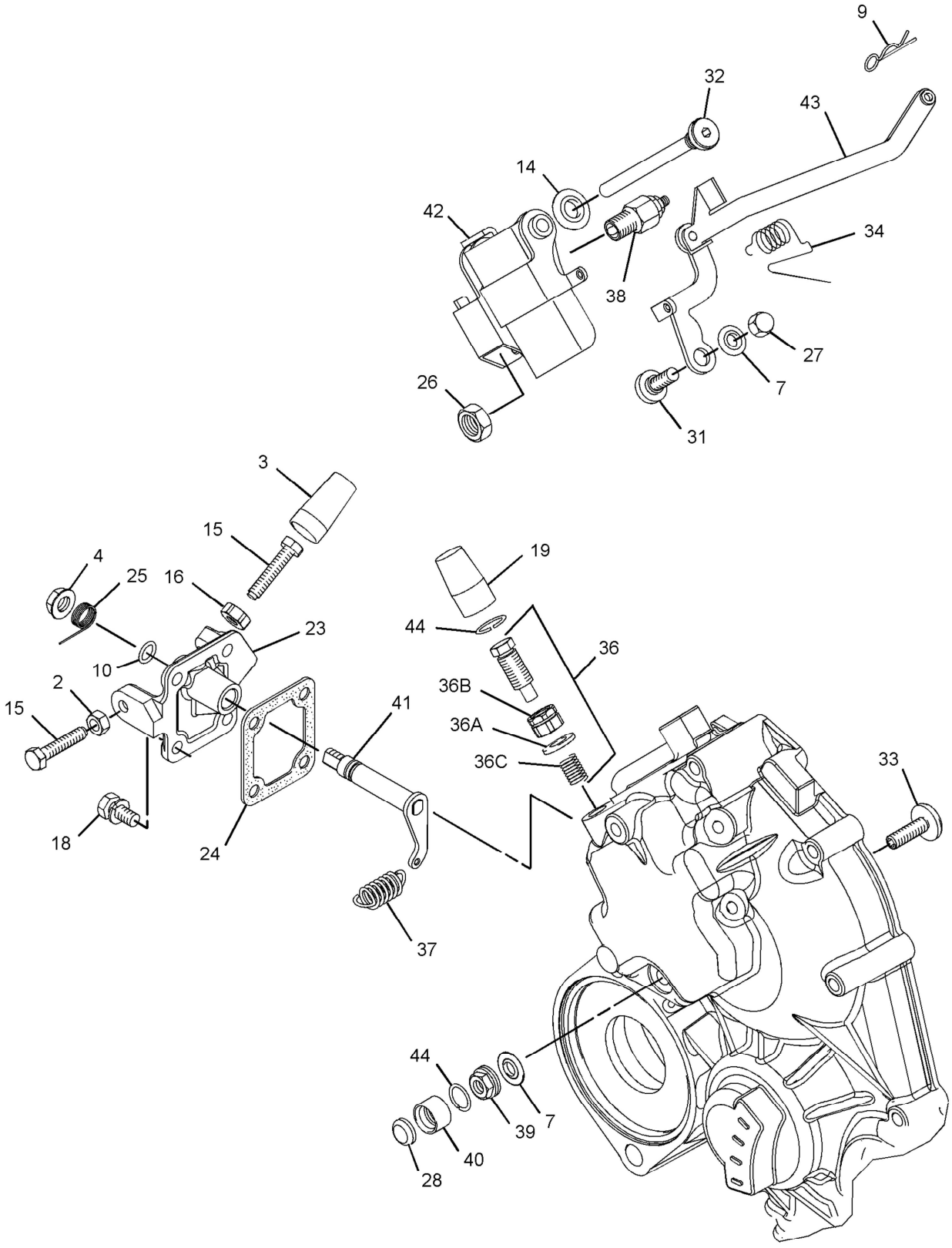

GRAPHIC #2

g01635018

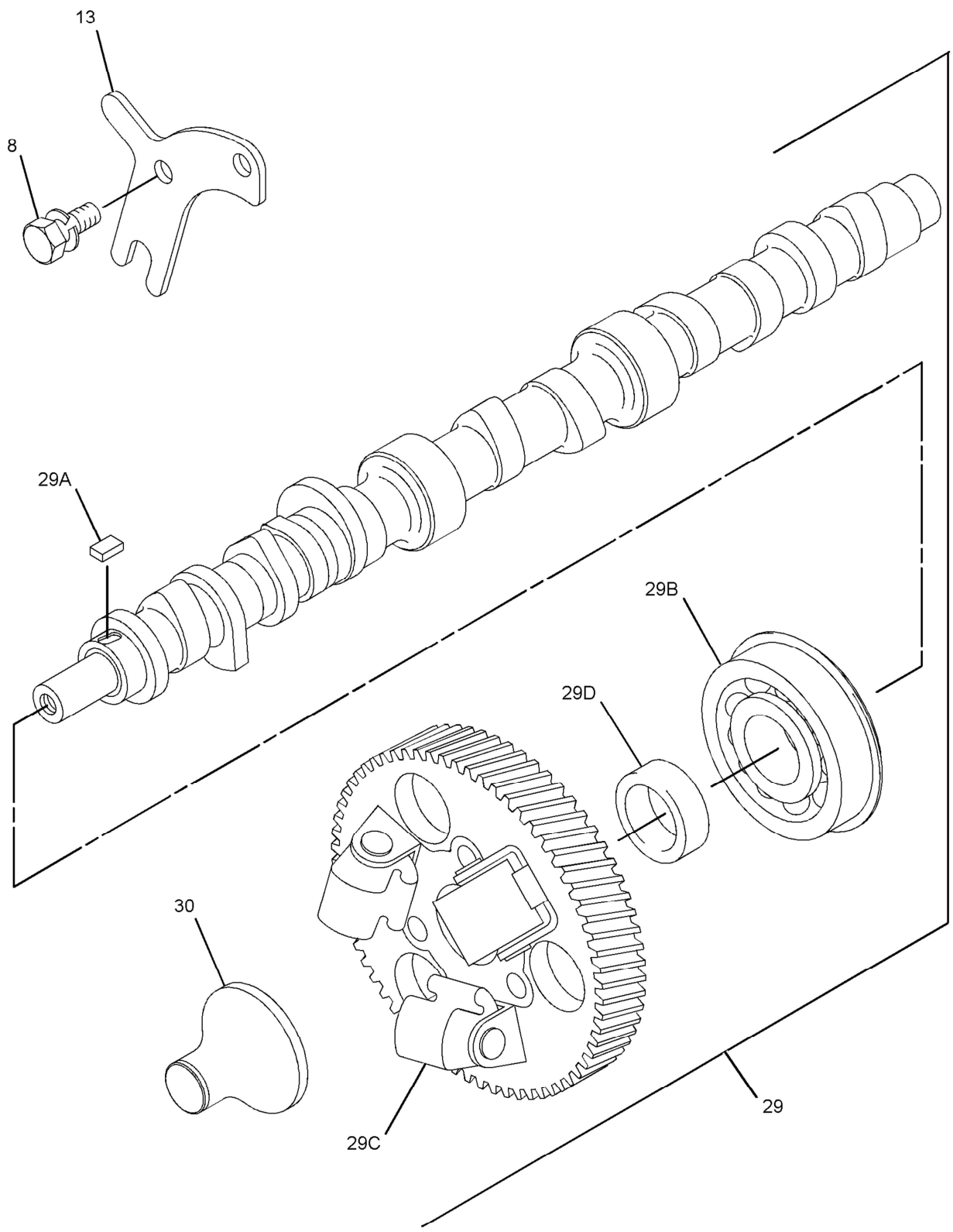

GRAPHIC #3 **<END>** g01635019

309-6718 HOUSING GP-FRONT

TYPE 1

SMCS-1151, 1162, 1206 i02882203

NOTE	REF NO	GRAPHIC REF	PART NUMBER	QTY	PART NAME 1 2 3 4 5 6 (PRODUCT LEVEL)	SEE PAGE
M	1	2	5C-2890	1	NUT (M6X1-THD)	
	2	2	139-5511	1	CAP (TAMPER RESISTANT)	
	3	2	153-5592	1	NUT	
	4	1	153-5960	2	NUT	
	5	1	153-5962	4	BOLT	
	6	2	153-6415	2	WASHER	
	7	3	153-6838	2	BOLT	
	8	2	153-7983	1	PIN	
	10	2	154-1403	1	SEAL-O-RING	
	11	1	154-1673	1	PIN	
	12	1	154-1675	1	SEAL	
	13	3	154-1680	1	PLATE	
M	14	2	8T-4971	2	BOLT (M6X1X30-MM)	
	15	2	162-2207	1	NUT	
	16	1	165-2140	7	BOLT	
	17	2	183-3538	4	BOLT	
	18	2	217-7115	1	CAP (TAMPER RESISTANT)	
	19	1	308-1871	1	GASKET	
	20	1	322-7490	1	HOUSING-FRONT	
	21	1	308-1874	1	HOLDER	
	22	1	308-1875	3	SEAL-O-RING	
	23	2	308-1877	1	BRACKET	
	24	2	308-1878	1	GASKET	
	25	2	322-7491	1	ARM (FRONT HOUSING)	
	26	2	317-7195	1	SPRING	
	27	2	308-1882	1	SPRING	
	28	2	322-7492	1	LEVER-CONTROL	
	29	2	308-1889	1	NUT	
	30	2	322-7493	1	LEVER-CONTROL	
	31	2	308-1892	1	NUT	
	32	2	311-0655	1	SPRING	
	33	2	308-1897	1	RING	
	34	2	321-8210	1	CAP AS-PROTECTION	
	35	2	321-4249	1	NUT	
	36	2	308-1901	1	CAP	
	37	3	308-1904	1	SLIDER	
	38	2	308-4266	1	SHAFT	
	39	2	309-6728	1	SHAFT	
	40	2	309-6729	1	SEAL-O-RING	
	41	2	319-3250	1	SENSOR-SPEED (ENGINE TIMING)	
	42	2	313-5832	1	BOLT AS	
	42A	2	153-7987	1	WASHER	
	42B	2	191-9297	1	NUT	
	42C	2	313-5833	1	SPRING	
	43	2	309-6732	1	BOLT	
	44	3	309-6733	1	CAMSHAFT AS	
	44A	3	153-6492	1	KEY-WOODRUFF	
	44B	3	154-4505	1	BEARING	
	44C	3	308-1903	1	GEAR-CAMSHAFT (66-TEETH) (66-TEETH)	
	44D	3	313-9323	1	SPACER	
F			154-1396	1	CLIP	

F-NOT SHOWN
M-METRIC PART

309-6718 **HOUSING GP-FRONT** *(contd.)* **i02882203**

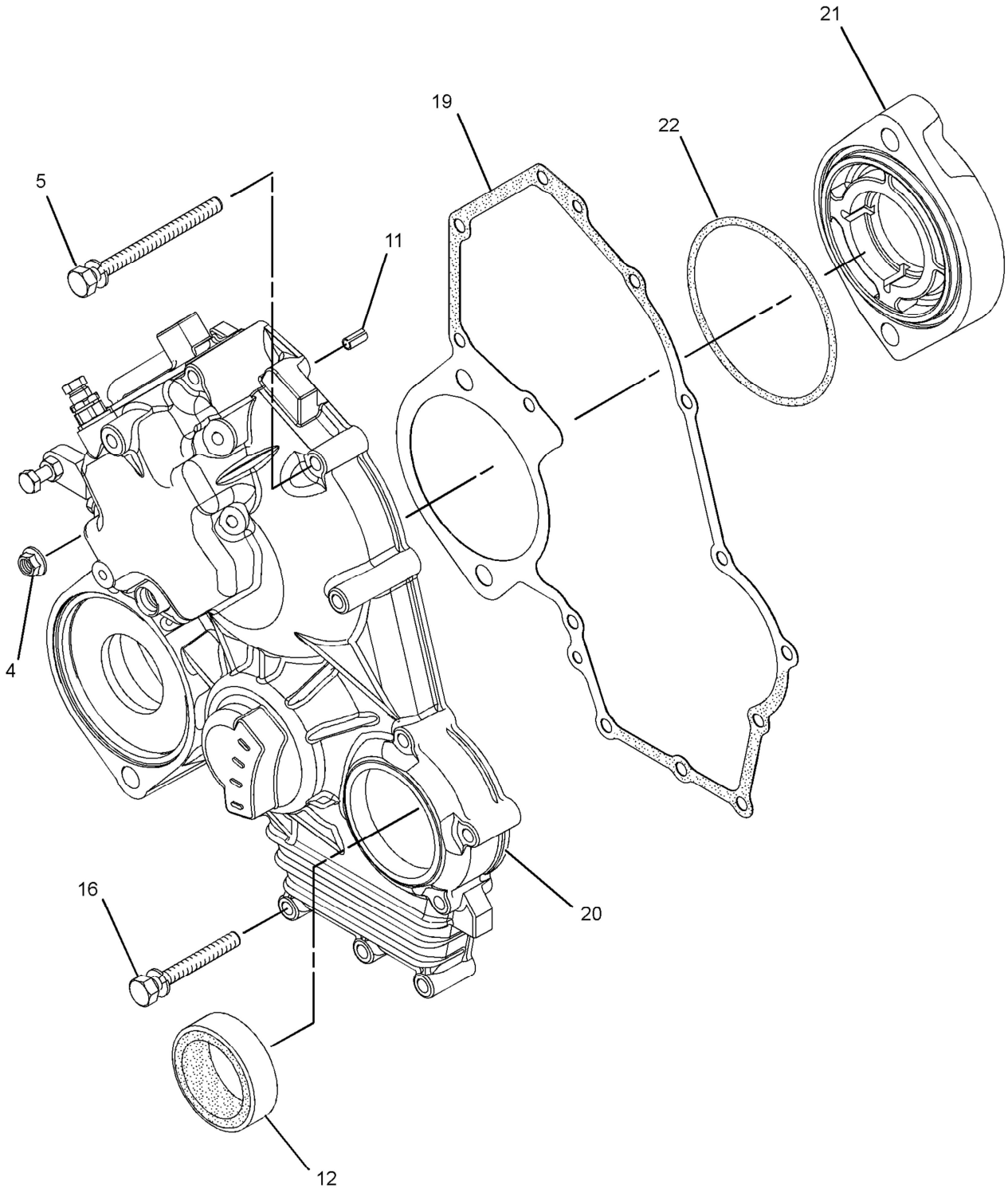

GRAPHIC #1 g01415338

309-6718 **HOUSING GP-FRONT** *(contd.)* **i02882203**

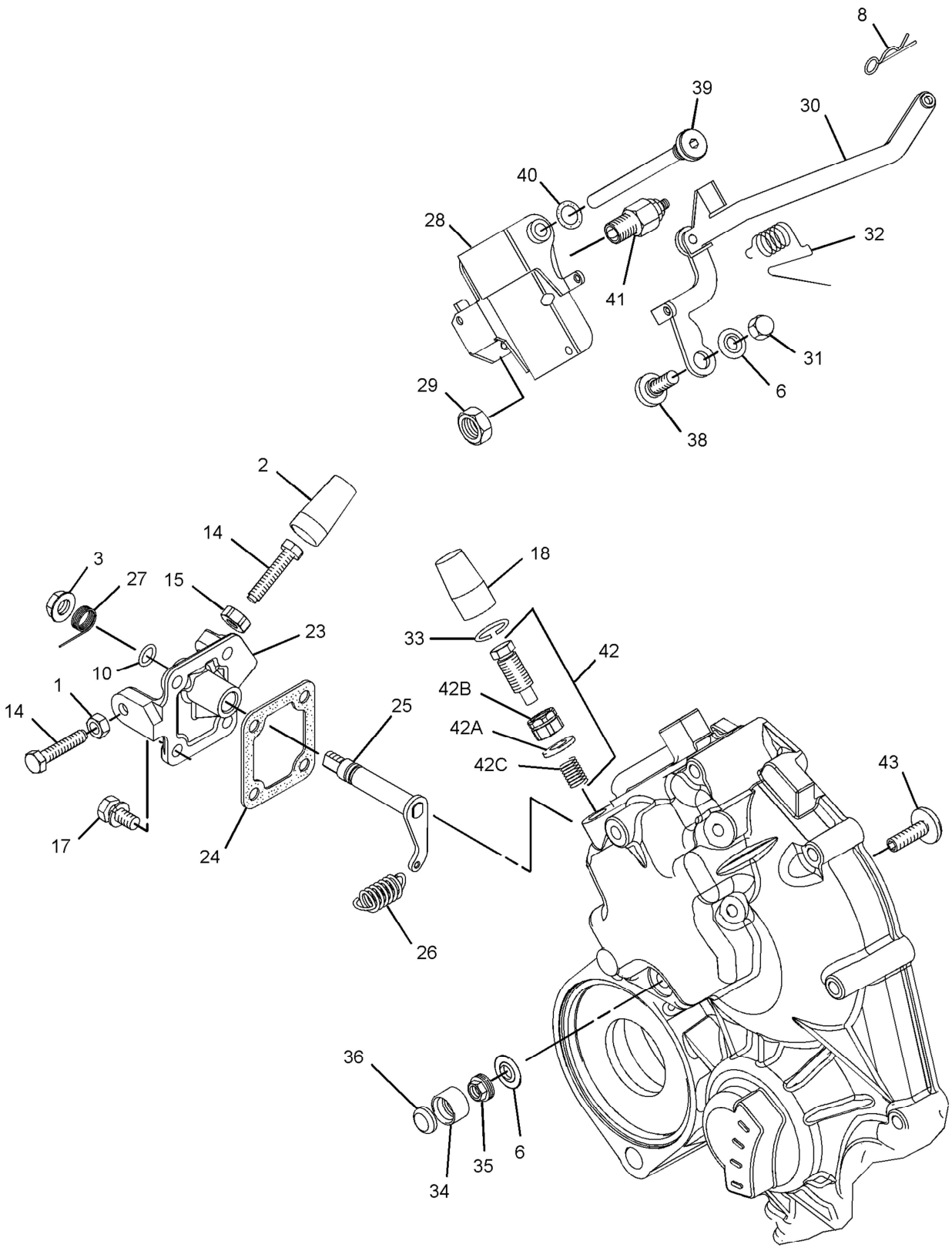

GRAPHIC #2

g01633334

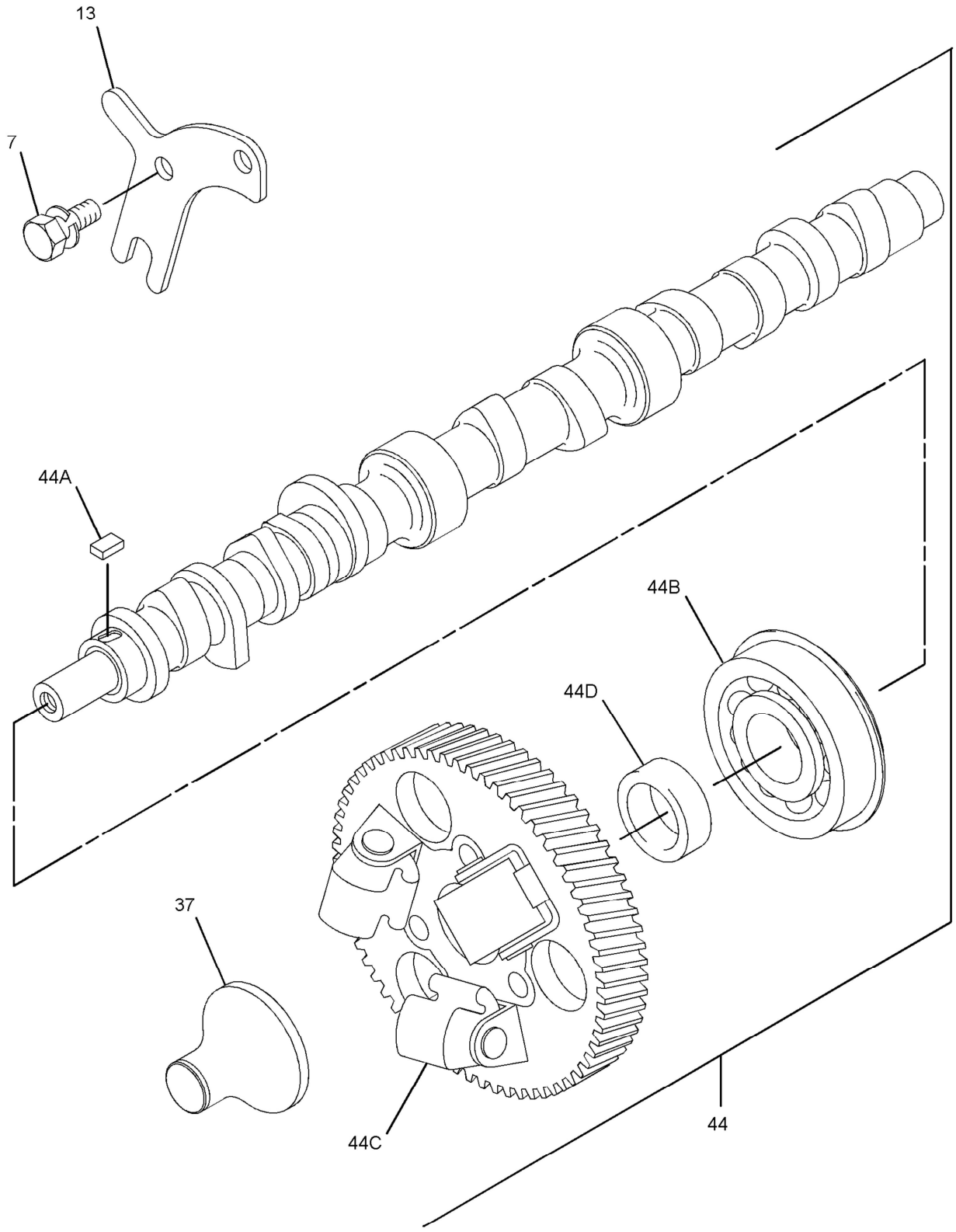

GRAPHIC #3 **<END>** g01415341

309-6718 HOUSING GP-FRONT

TYPE 2

SMCS-1151, 1162, 1206 **i03206575**

NOTE	REF NO	GRAPHIC REF	PART NUMBER	QTY	PART NAME 1 2 3 4 5 6 (PRODUCT LEVEL)	SEE PAGE
M	1	2	**5C-2890**	1	NUT (M6X1-THD)	
	2	2	**139-5511**	1	CAP (TAMPER RESISTANT)	
	3	2	**153-5592**	1	NUT	
	4	1	**153-5960**	2	NUT	
	5	1	**153-5962**	4	BOLT	
	6	2	**153-6415**	2	WASHER	
	7	3	**153-6838**	2	BOLT	
	8	2	**153-7983**	1	PIN	
	10	2	**154-1403**	1	SEAL-O-RING	
	11	1	**154-1673**	1	PIN	
	12	1	**154-1675**	1	SEAL	
	13	3	**154-1680**	1	PLATE	
M	14	2	**8T-4971**	2	BOLT (M6X1X30-MM)	
	15	2	**162-2207**	1	NUT	
	16	1	**165-2140**	7	BOLT	
	17	2	**183-3538**	4	BOLT	
	18	2	**217-7115**	1	CAP (TAMPER RESISTANT)	
	19	1	**308-1871**	1	GASKET	
	20	1	**322-7490**	1	HOUSING-FRONT	
C	23	2	**335-5578**	1	BRACKET	
	24	2	**308-1878**	1	GASKET	
C	25	2	**334-0732**	1	ARM (FRONT HOUSING)	
	26	2	**317-7195**	1	SPRING	
	27	2	**308-1882**	1	SPRING	
	28	2	**322-7492**	1	LEVER-CONTROL	
	29	2	**308-1889**	1	NUT	
	30	2	**322-7493**	1	LEVER-CONTROL	
	31	2	**308-1892**	1	NUT	
	32	2	**311-0655**	1	SPRING	
C	33	2	**308-1897**	2	RING	
C	34	2	**332-1361**	1	CAP-PROTECTION	
	35	2	**321-4249**	1	NUT	
	36	2	**308-1901**	1	CAP	
	37	3	**308-1904**	1	SLIDER	
	38	2	**308-4266**	1	SHAFT	
	39	2	**309-6728**	1	SHAFT	
	40	2	**309-6729**	1	SEAL-O-RING	
	41	2	**319-3250**	1	SENSOR-SPEED (ENGINE TIMING)	
	42	2	**313-5832**	1	BOLT AS	
	42A	2	**153-7987**	1	WASHER	
	42B	2	**191-9297**	1	NUT	
	42C	2	**313-5833**	1	SPRING	
	43	2	**309-6732**	1	BOLT	
	44	3	**309-6733**	1	CAMSHAFT AS	
	44A	3	**153-6492**	1	KEY-WOODRUFF	
	44B	3	**154-4505**	1	BEARING	
	44C	3	**308-1903**	1	GEAR-CAMSHAFT (66-TEETH)	
	44D	3	**313-9323**	1	SPACER	
F			**154-1396**	1	CLIP	
CF			**308-1875**	1	SEAL-O-RING	

C-CHANGE FROM PREVIOUS TYPE
F-NOT SHOWN
M-METRIC PART

309-6718 **HOUSING GP-FRONT** *(contd.)* **i03206575**

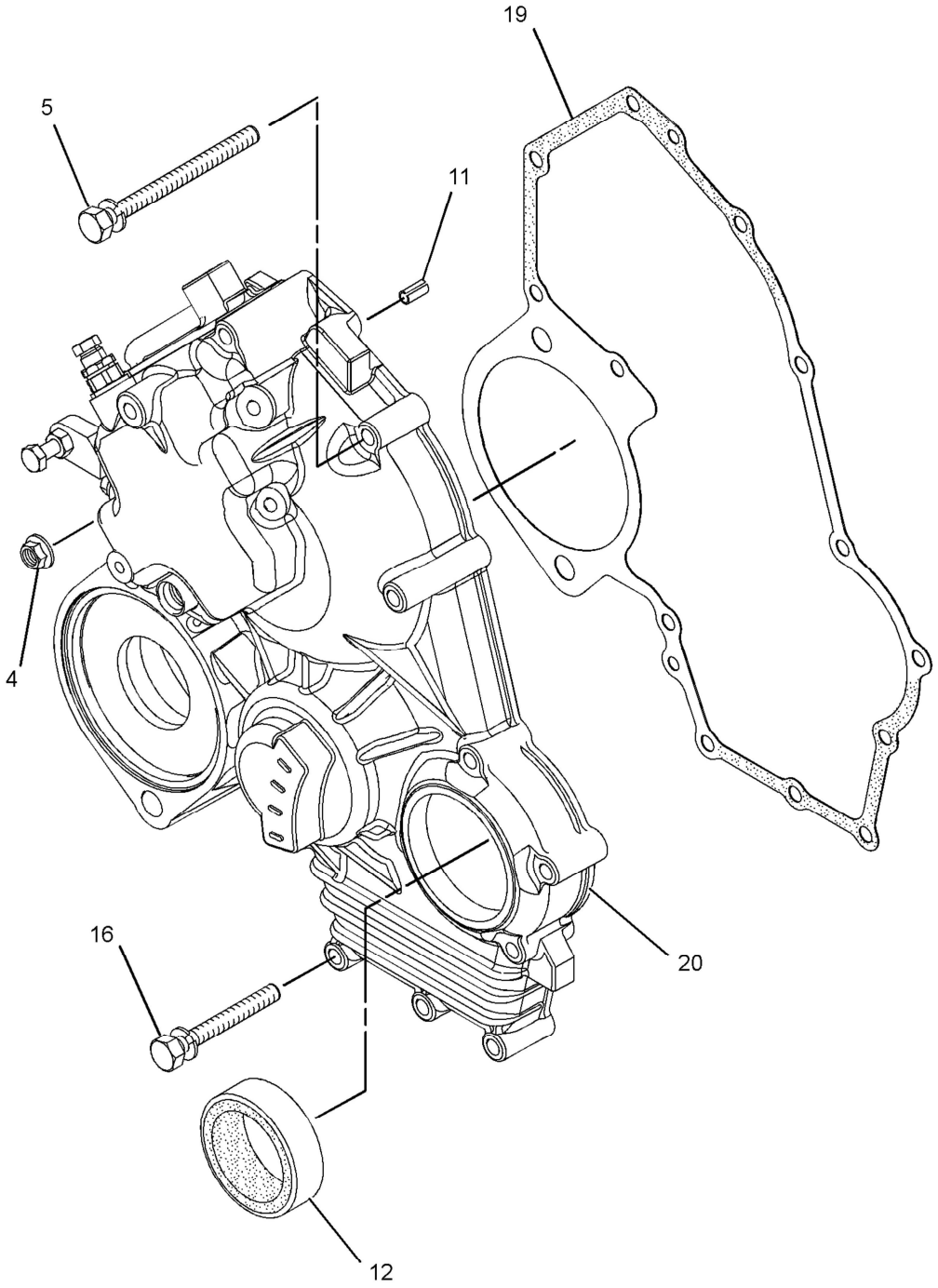

GRAPHIC #1 g01636998

309-6718 **HOUSING GP-FRONT** *(contd.)* **i03206575**

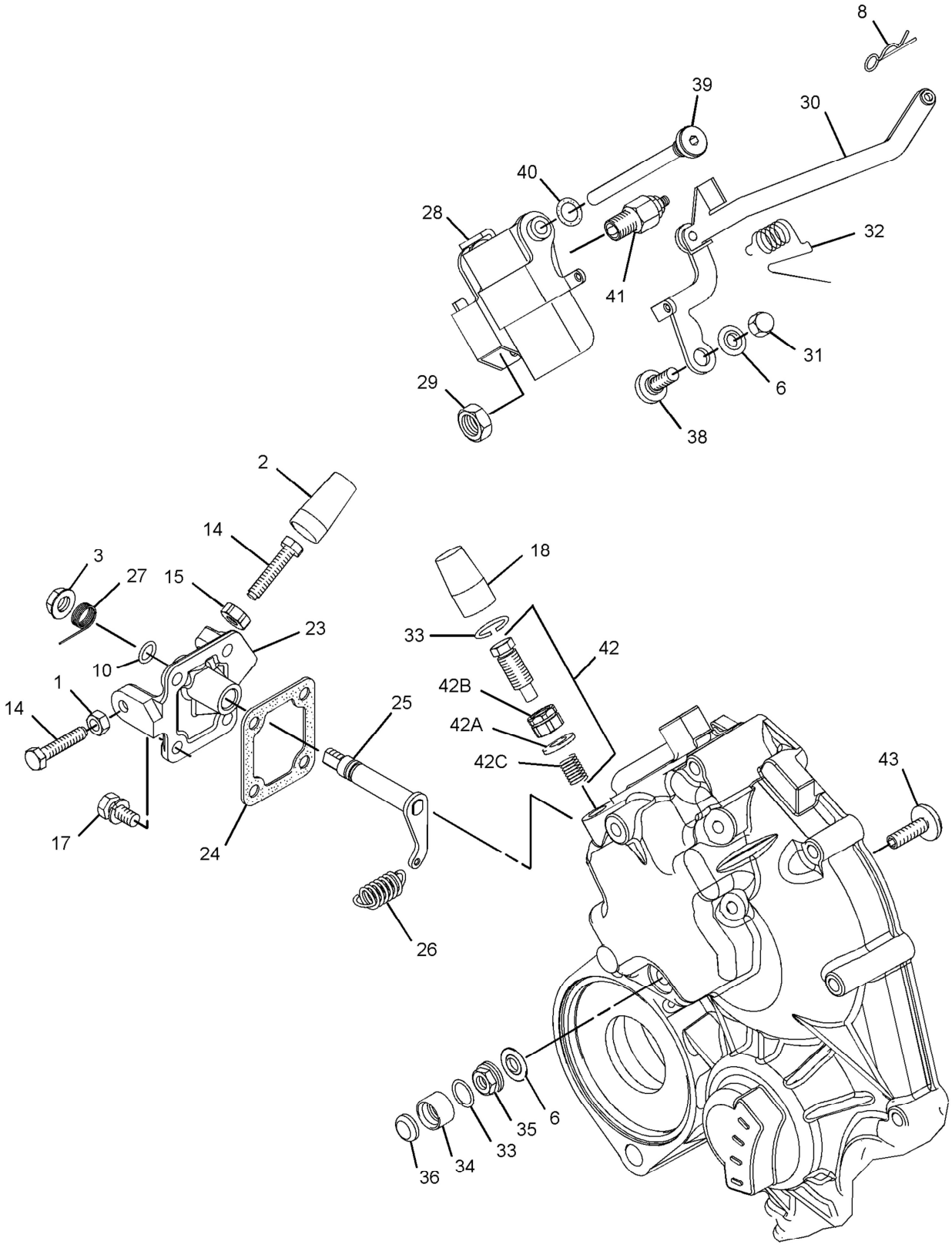

GRAPHIC #2 g01636999

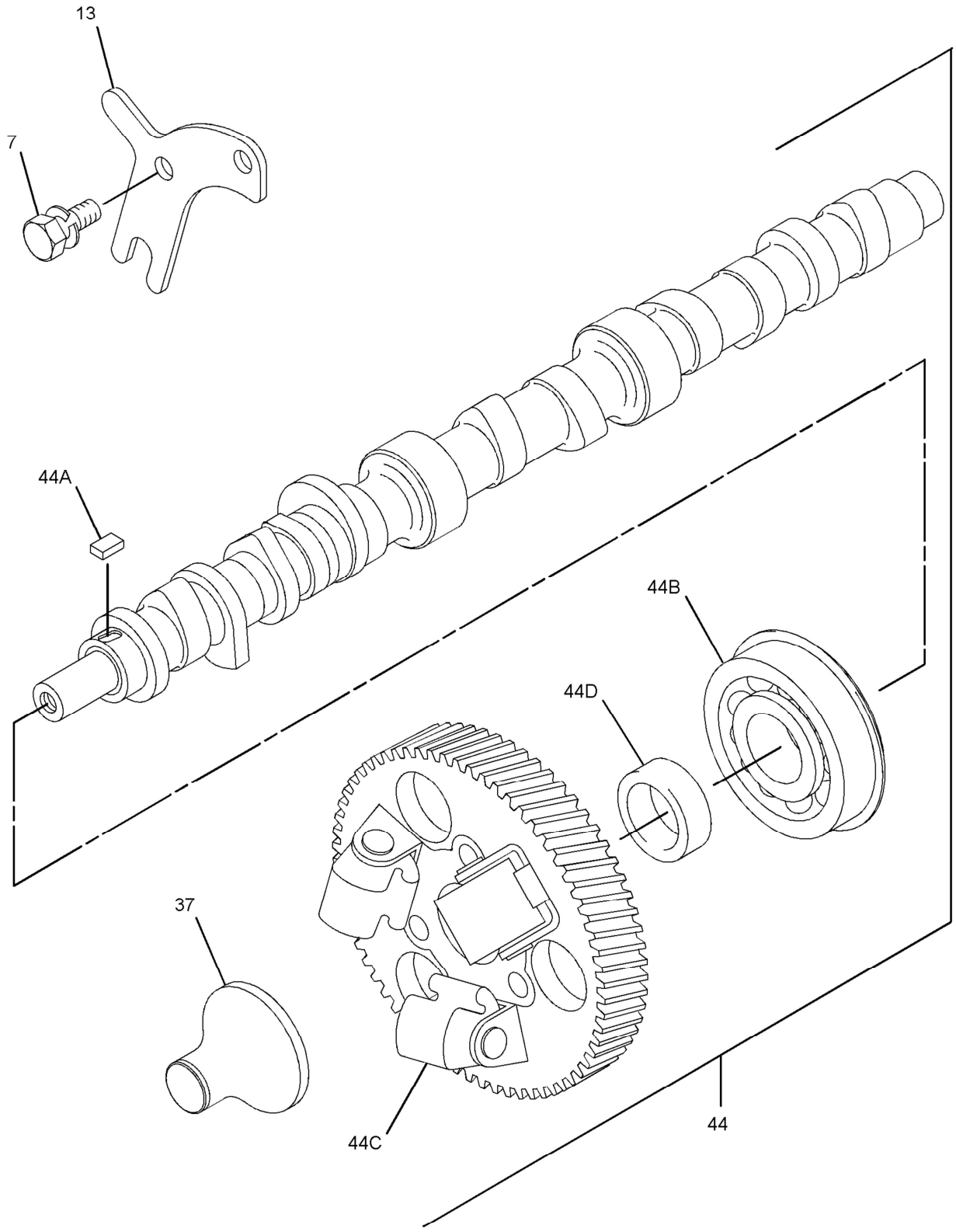

GRAPHIC #3 **<END>** g01415341

311-1682 HOUSING GP-FRONT

SMCS-1151, 1162, 1206 **i03258766**

NOTE	REF NO	GRAPHIC REF	PART NUMBER	QTY	PART NAME 1 2 3 4 5 6 (PRODUCT LEVEL)	SEE PAGE
	1	1	**153-5960**	2	NUT	
	2	1	**153-5962**	4	BOLT	
	3	1	**154-1673**	1	PIN	
	4	1	**154-1675**	1	SEAL	
	5	1	**165-2140**	7	BOLT	
	6	2	**217-7115**	1	CAP (TAMPER RESISTANT)	
	7	1	**308-1871**	1	GASKET	
	10	2	**309-6729**	1	SEAL-O-RING	
	11	1	**311-0656**	1	CASE	

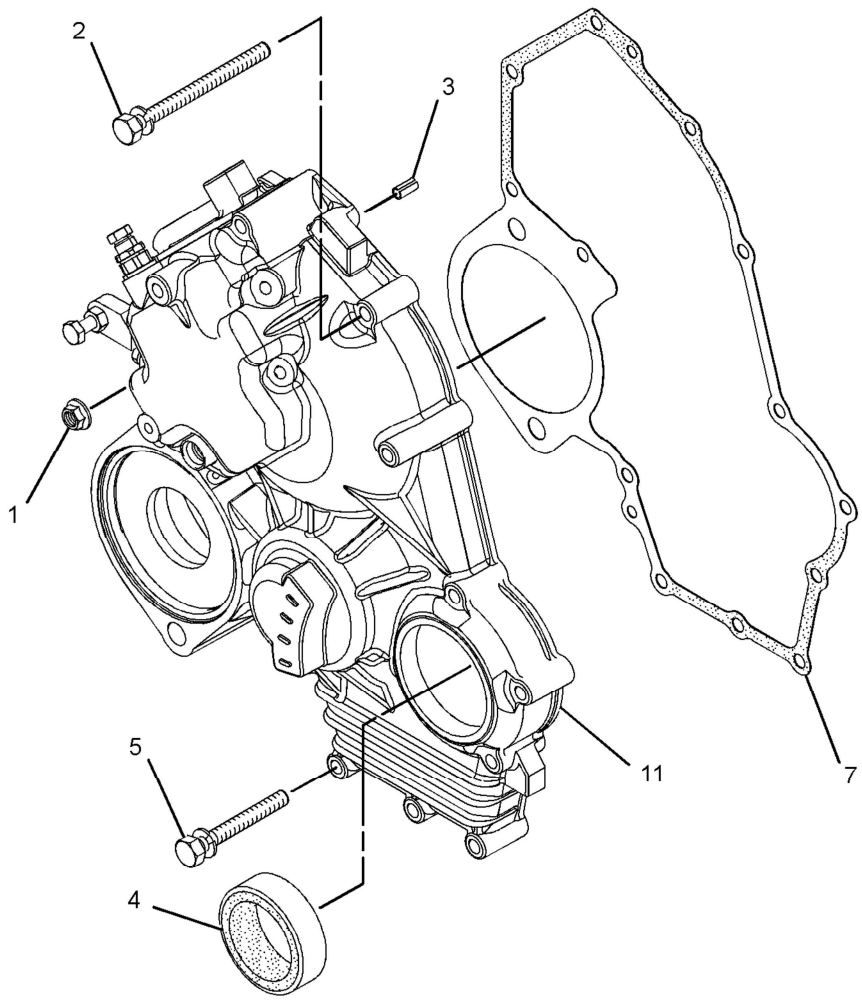

GRAPHIC #1 g01667509

311-1682 **HOUSING GP-FRONT** *(contd.)* **i03258766**

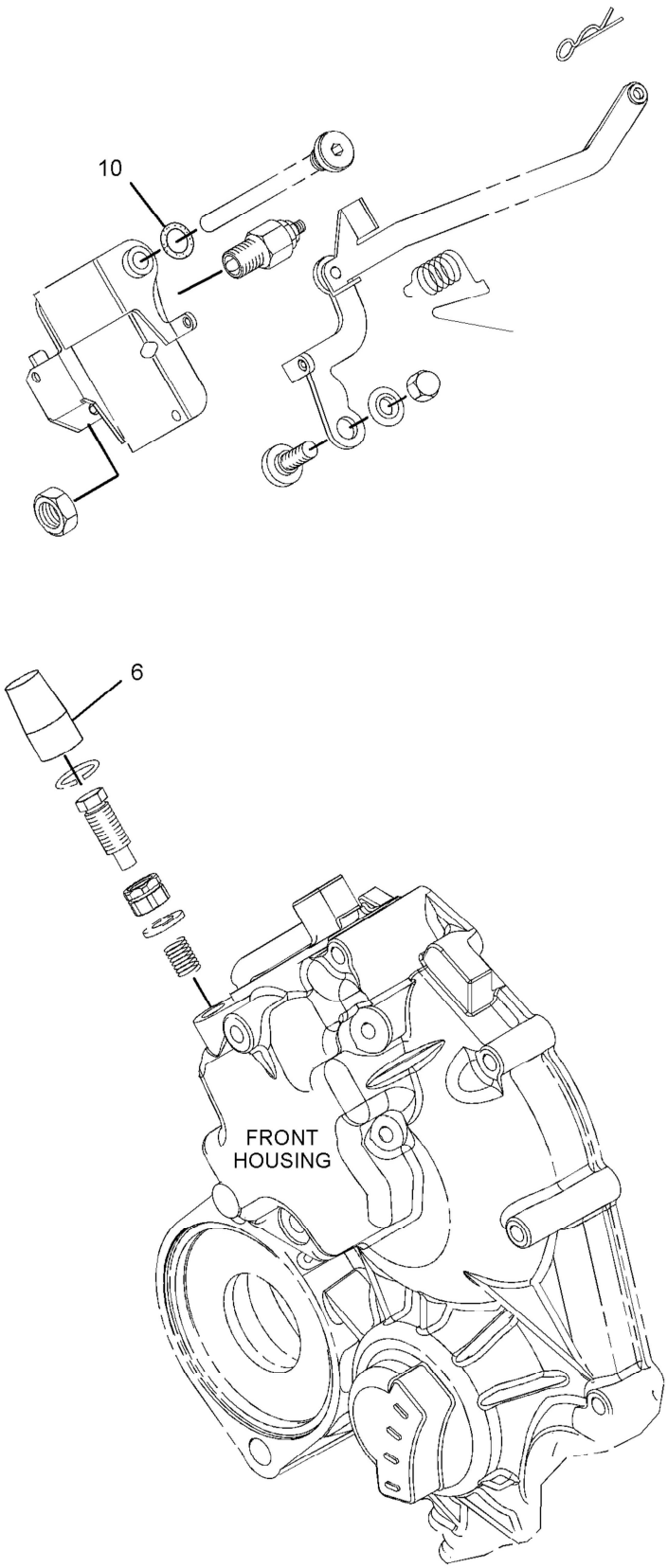

GRAPHIC #2 **<END>** g01634717

311-9023 HOUSING GP-FRONT

SMCS-1151, 1162, 1206 **i03168581**

NOTE	REF NO	GRAPHIC REF	PART NUMBER	QTY	PART NAME 1 2 3 4 5 6 (PRODUCT LEVEL)	SEE PAGE
	1	1	**153-5960**	2	NUT	
	2	1	**153-5962**	4	BOLT	
	3	1	**154-1673**	1	PIN	
	4	1	**154-1675**	1	SEAL	
	5	1	**165-2140**	7	BOLT	
	6	1	**308-1871**	1	GASKET	
	7	1	**322-7490**	1	HOUSING-FRONT	
F			**153-6415**	1	WASHER	

F-NOT SHOWN

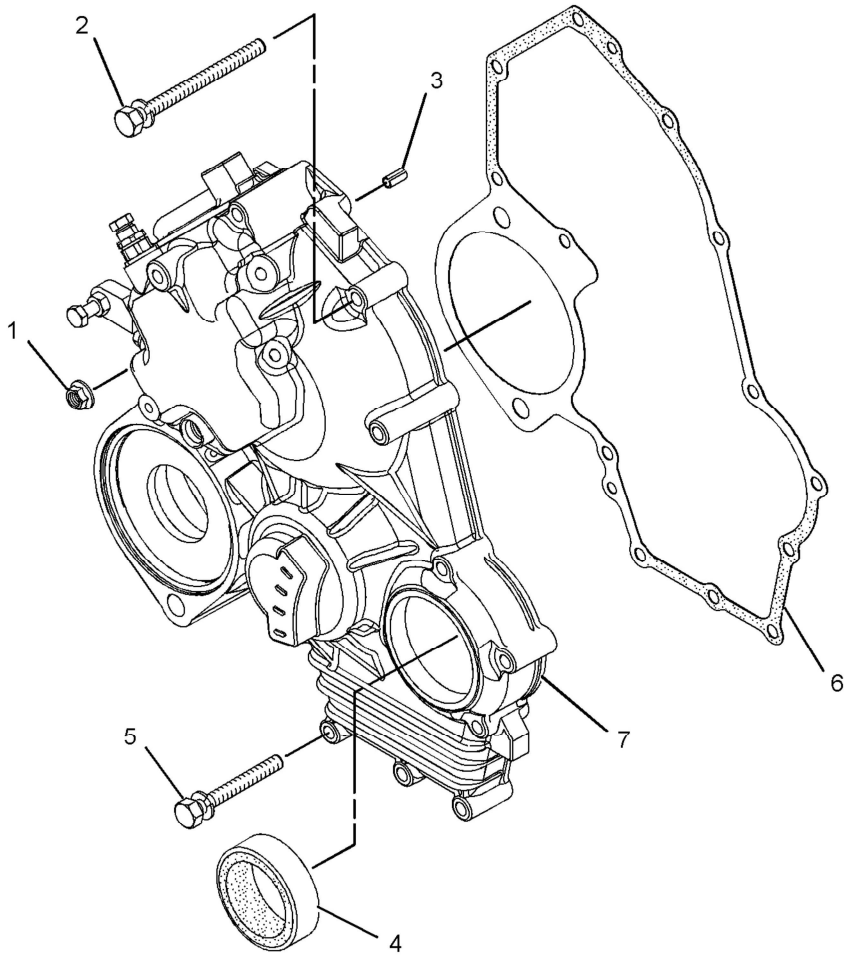

GRAPHIC #1 **<END>** g01626211

BASIC ENGINE

317-7186 HOUSING GP-FRONT

SMCS-1151, 1162, 1206 **i03168588**

NOTE	REF NO	GRAPHIC REF	PART NUMBER	QTY	PART NAME 1 2 3 4 5 6 (PRODUCT LEVEL)	SEE PAGE
	1	1	**153-5960**	2	NUT	
	2	1	**153-5962**	4	BOLT	
	3	1	**154-1673**	1	PIN	
	4	1	**154-1675**	1	SEAL	
	5	1	**165-2140**	6	BOLT	
	6	1	**308-1871**	1	GASKET	
	7	1	**322-7490**	1	HOUSING-FRONT	

317-7186 **HOUSING GP-FRONT** *(contd.)* **i03168588**

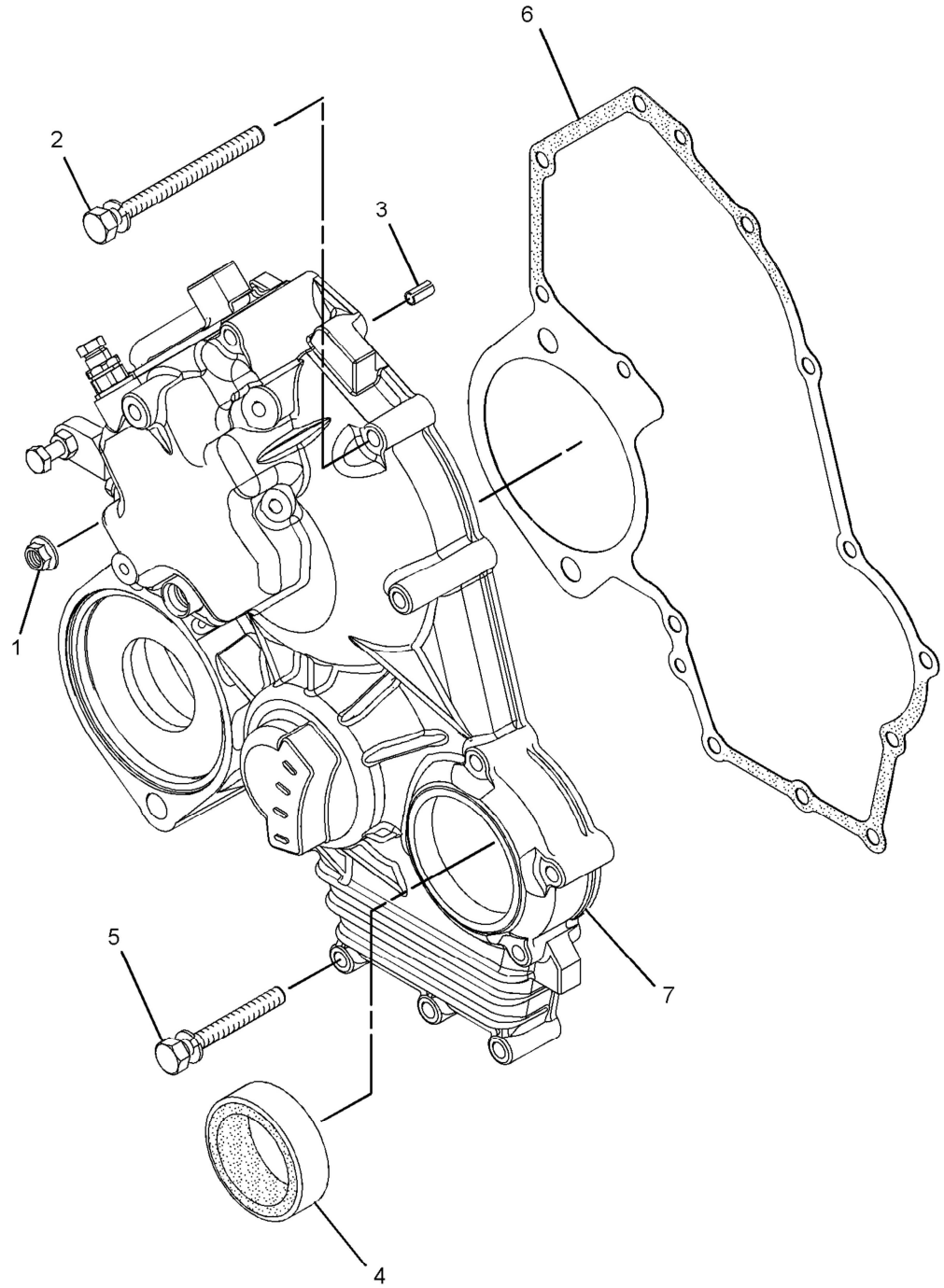

GRAPHIC #1 **<END>** g01624458

BASIC ENGINE

323-9145 HOUSING GP-FRONT

SMCS-1151, 1162, 1206 **i02908565**

NOTE	REF NO	GRAPHIC REF	PART NUMBER	QTY	PART NAME 1 2 3 4 5 6 (PRODUCT LEVEL)	SEE PAGE
	1	1	**153-5960**	2	NUT	
	2	1	**153-5962**	4	BOLT	
	3	1	**154-1673**	1	PIN	
	4	1	**154-1675**	1	SEAL	
	5	1	**165-2140**	7	BOLT	
	6	1	**308-1871**	1	GASKET	
	7	1	**328-3226**	1	HOUSING-FRONT	

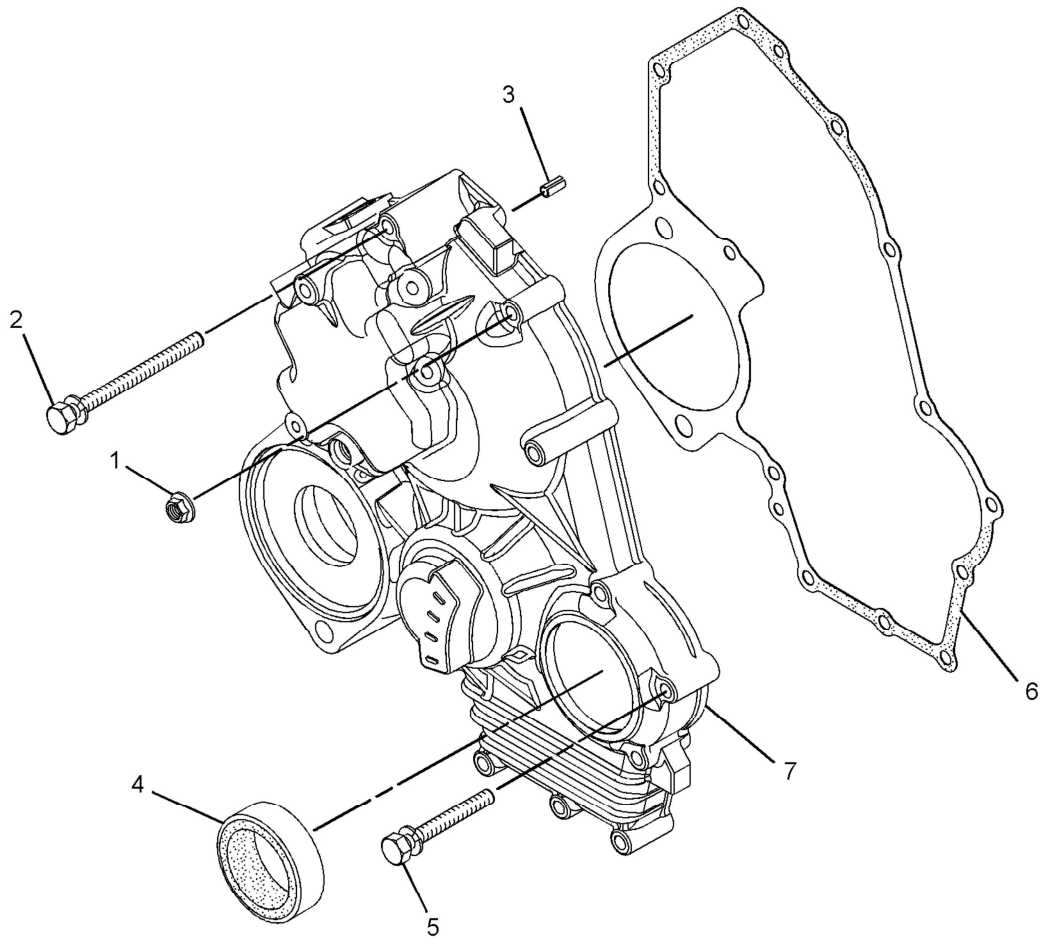

GRAPHIC #1 **<END>** g01646598

325-5661 HOUSING GP-FRONT

SMCS-1151, 1162, 1206 **i02962243**

NOTE	REF NO	GRAPHIC REF	PART NUMBER	QTY	PART NAME 1 2 3 4 5 6 (PRODUCT LEVEL)	SEE PAGE
	1	1	**153-5960**	2	NUT	
	2	1	**153-5962**	4	BOLT	
	3	1	**154-1673**	1	PIN	
	4	1	**154-1675**	1	SEAL	
	5	1	**165-2140**	7	BOLT	
	6	1	**308-1871**	1	GASKET	
	7	1	**322-7490**	1	HOUSING-FRONT	

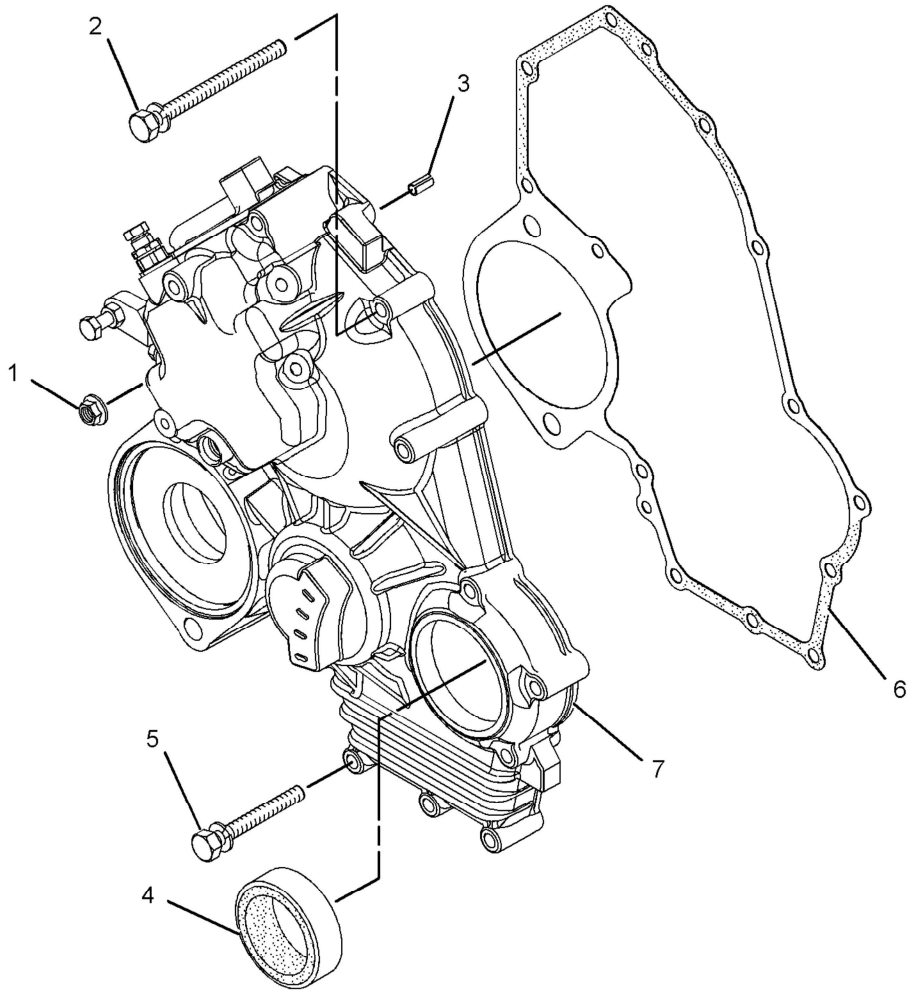

GRAPHIC #1 **<END>** g01542613

BASIC ENGINE

325-5667 HOUSING GP-FRONT

SMCS-1151, 1162, 1206 **i03103443**

NOTE	REF NO	GRAPHIC REF	PART NUMBER	QTY	PART NAME 1 2 3 4 5 6 (PRODUCT LEVEL)	SEE PAGE
	1	1	**138-7162**	2	BOLT	
	2	1	**154-1399**	2	WASHER	
	3	1	**154-2403**	2	WASHER	
	5	1	**168-9001**	12	BOLT	
	6	1	**210-9587**	6	DOWEL	
	7	1	**293-0582**	1	PLATE	

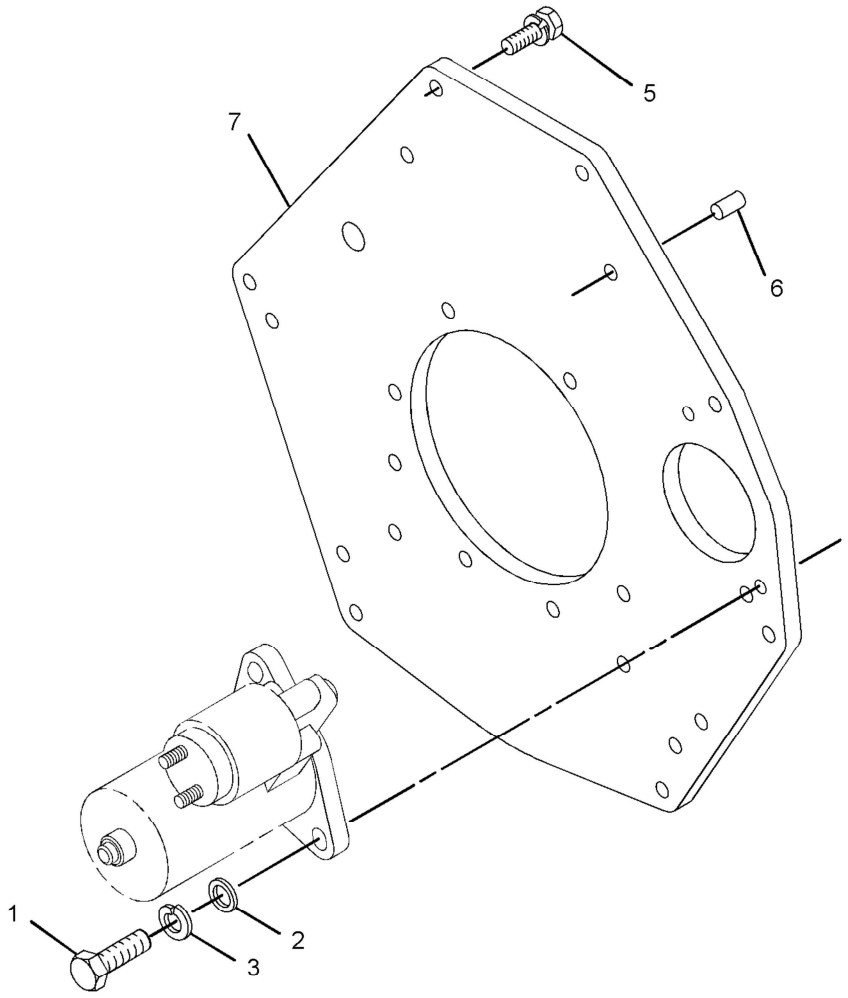

GRAPHIC #1 **<END>** g01640704

331-0214 HOUSING GP-FRONT

SMCS-1151, 1162, 1206 **i03115942**

NOTE	REF NO	GRAPHIC REF	PART NUMBER	QTY	PART NAME 1 2 3 4 5 6 (PRODUCT LEVEL)	SEE PAGE
	1	1	**153-5960**	2	NUT	
	2	1	**153-5962**	4	BOLT	
	3	1	**154-1673**	1	PIN	
	4	1	**154-1675**	1	SEAL	
	5	1	**165-2140**	7	BOLT	
	6	1	**308-1871**	1	GASKET	
	7	1	**322-7490**	1	HOUSING-FRONT	

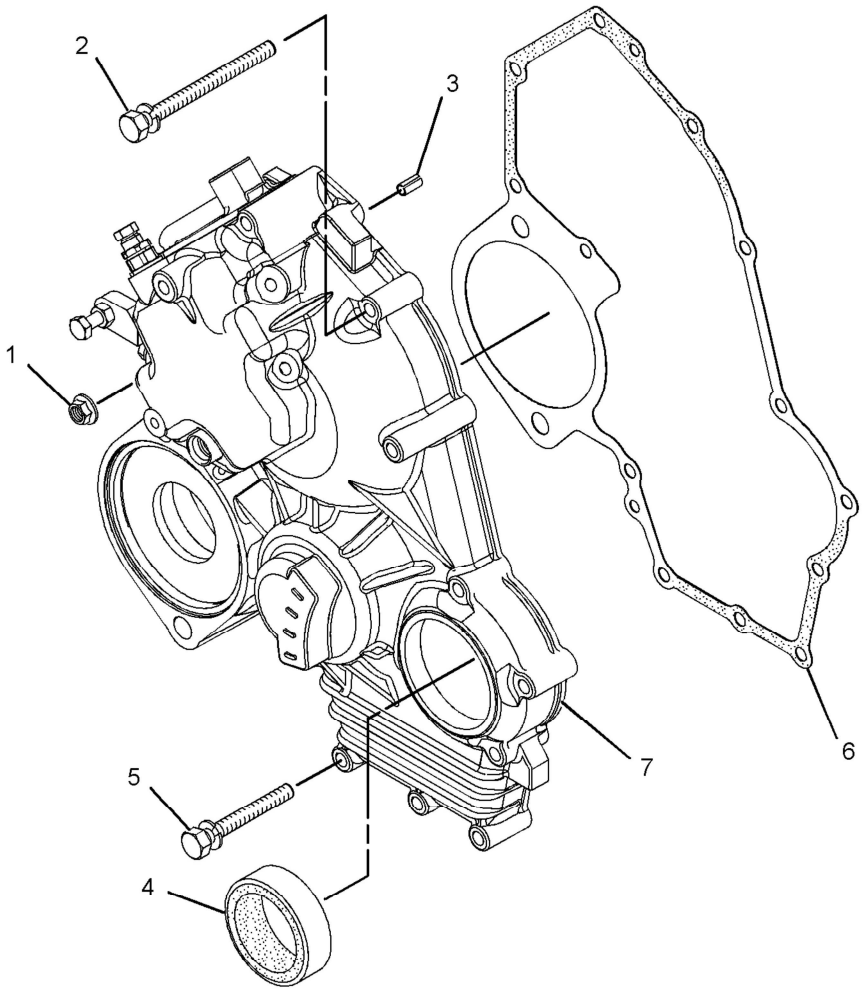

GRAPHIC #1 **<END>** g01660414

BASIC ENGINE

332-1362 HOUSING GP-FRONT

SMCS-1151, 1162, 1206 **i03179602**

NOTE	REF NO	GRAPHIC REF	PART NUMBER	QTY	PART NAME 1 2 3 4 5 6 (PRODUCT LEVEL)	SEE PAGE
	1	1	**153-5960**	1	NUT	
	2	1	**153-5962**	4	BOLT	
	3	1	**154-1673**	1	PIN	
	4	1	**154-1675**	1	SEAL	
	5	1	**165-2140**	8	BOLT	
	6	1	**308-1871**	1	GASKET	
	7	1	**322-7490**	1	HOUSING-FRONT	

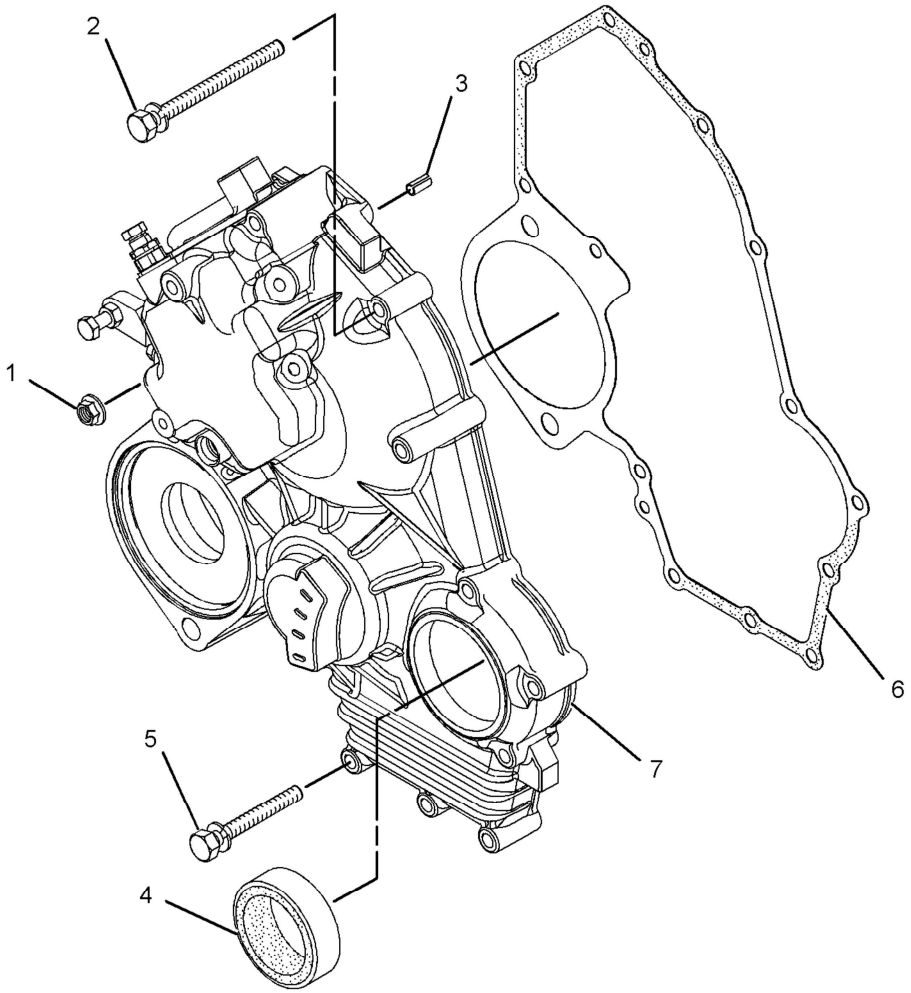

GRAPHIC #1 **<END>** g01542613

308-2315 LIFTING GP-ENGINE

SMCS-1122 **i02752303**

NOTE	REF NO	GRAPHIC REF	PART NUMBER	QTY	PART NAME 1 2 3 4 5 6 (PRODUCT LEVEL)	SEE PAGE
	1	1	**155-7984**	2	WASHER	
	2	1	**165-2141**	1	BOLT	
	3	1	**168-9001**	1	BOLT	
	4	1	**236-4128**	2	PLATE-LIFTING	

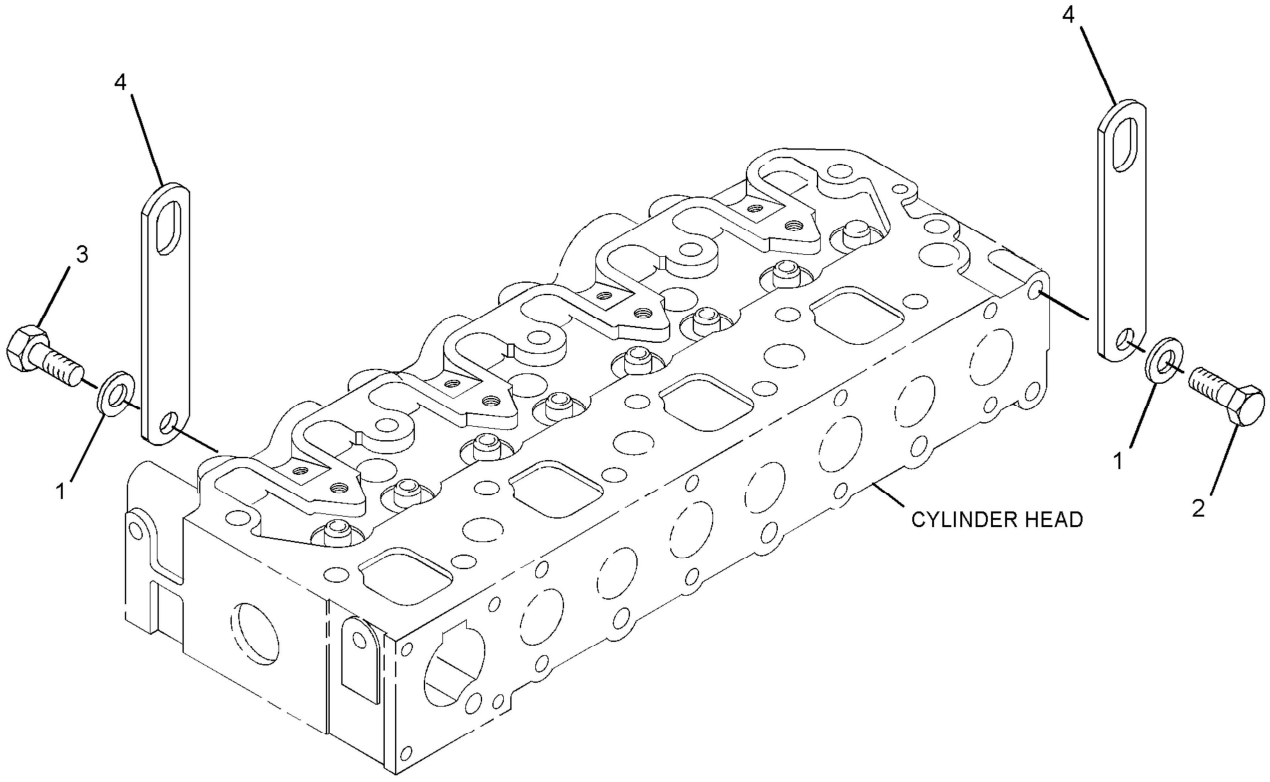

GRAPHIC #1 **<END>** g01414974

BASIC ENGINE

309-6725 LIFTING GP-ENGINE

TYPE 1

SMCS-1122 **i02859884**

NOTE	REF NO	GRAPHIC REF	PART NUMBER	QTY	PART NAME 1 2 3 4 5 6 (PRODUCT LEVEL)	SEE PAGE
	1	1	**153-6375**	3	BOLT	
	2	1	**309-6737**	1	EYE-LIFTING	
	3	1	**153-6374**	1	PLATE	

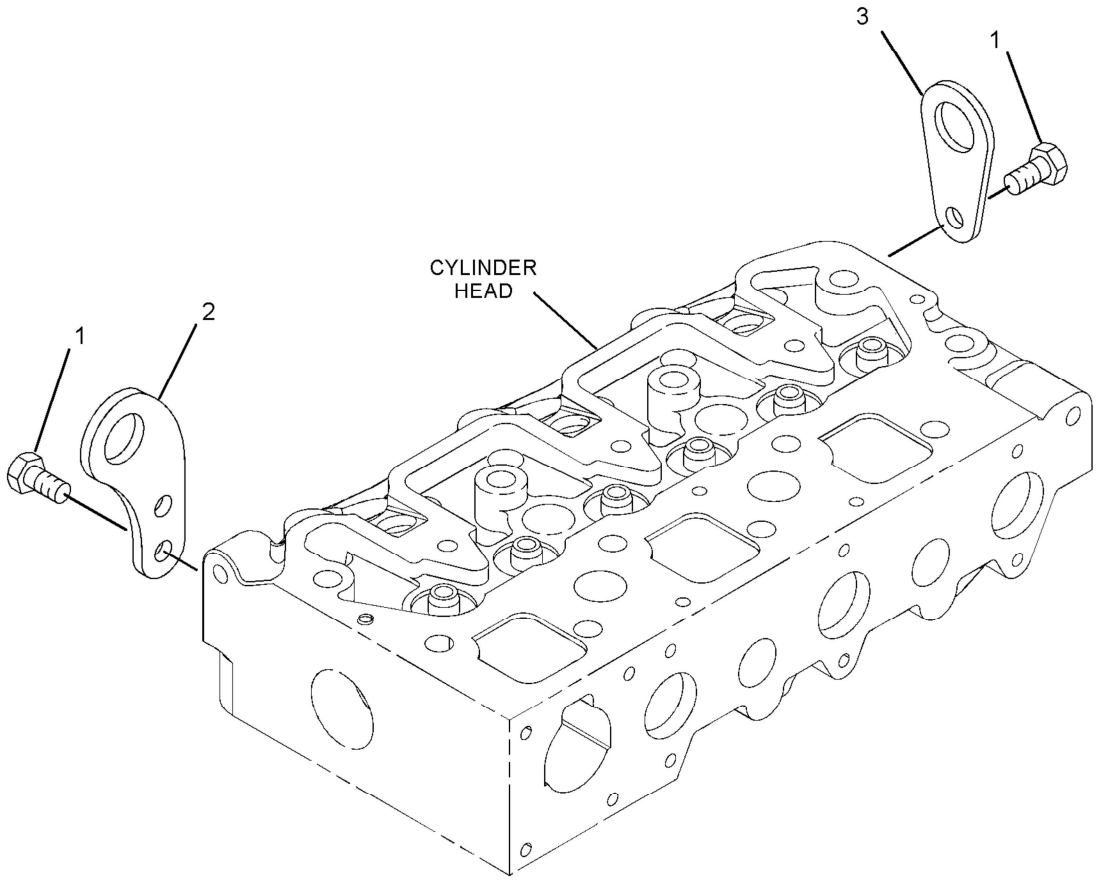

GRAPHIC #1 **<END>** g01389556

309-6725 LIFTING GP-ENGINE

TYPE 2

SMCS-1122 **i02889519**

NOTE	REF NO	GRAPHIC REF	PART NUMBER	QTY	PART NAME 1 2 3 4 5 6 (PRODUCT LEVEL)	SEE PAGE
C	1	1	**165-2141**	1	BOLT	
C	2	1	**236-4128**	2	PLATE-LIFTING	
C	3	1	**155-7984**	1	WASHER	

C-CHANGE FROM PREVIOUS TYPE

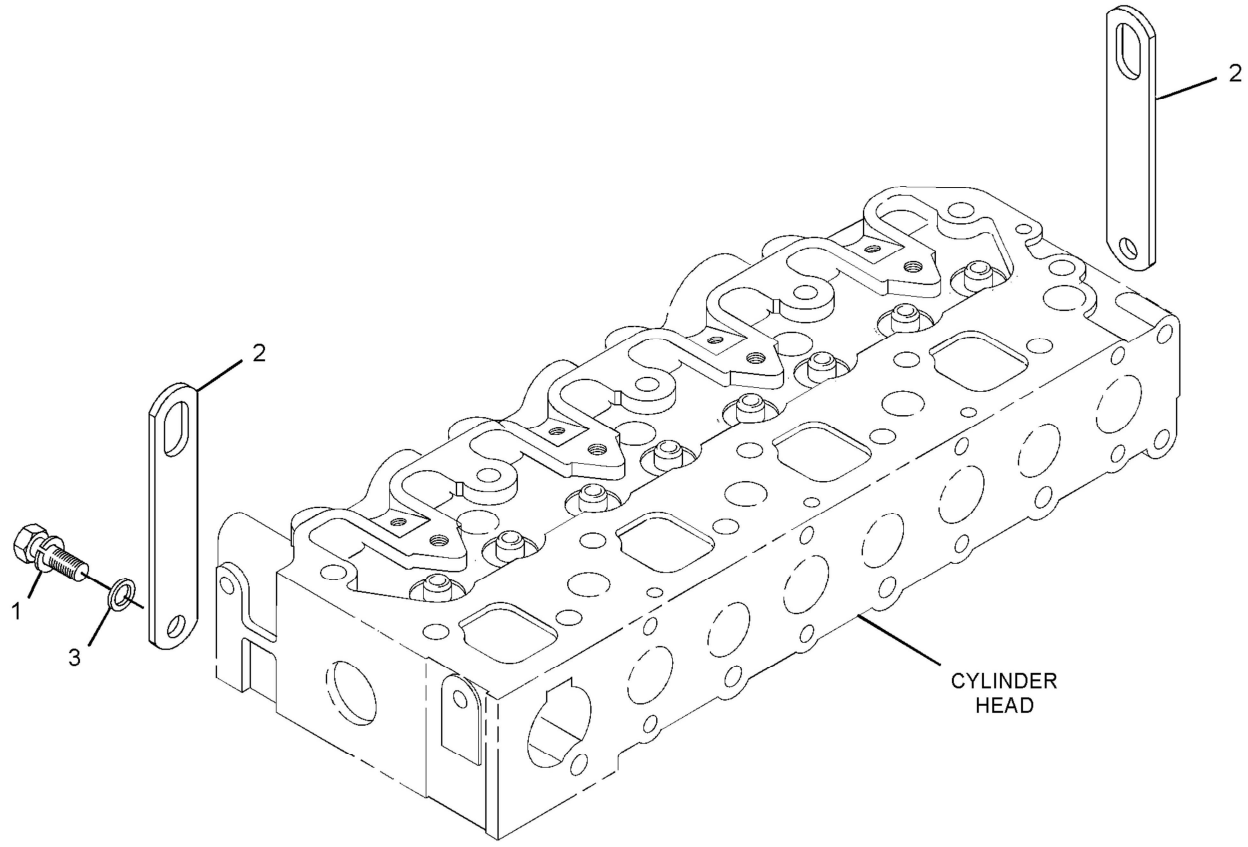

GRAPHIC #1 **<END>** g01440284

BASIC ENGINE

308-2295 PAN GP-OIL

SMCS-1302 **i03200751**

NOTE	REF NO	GRAPHIC REF	PART NUMBER	QTY	PART NAME 1 2 3 4 5 6 (PRODUCT LEVEL)	SEE PAGE
	1	1	**153-6833**	31	BOLT	
	2	1	**153-6835**	1	SEAL-O-RING	
	3	1	**153-6838**	3	BOLT	
	4	1	**153-6841**	4	SEAL-O-RING	
	5	1	**154-1947**	1	PIPE-OIL	
	6	1	**154-1948**	1	STRAINER (OIL PAN) (ENGINE)	
	7	1	**215-2605**	1	GASKET	
	8	1	**218-2333**	1	PAN-OIL	
	9	1	**229-5150**	1	TUBE AS	
	10	1	**229-5151**	1	GAUGE-OIL LEVEL (DIPSTICK) (ENGINE)	
	11	1	**319-7366**	1	PLUG	

308 - 2295 **PAN GP-OIL** *(contd.)* **i03200751**

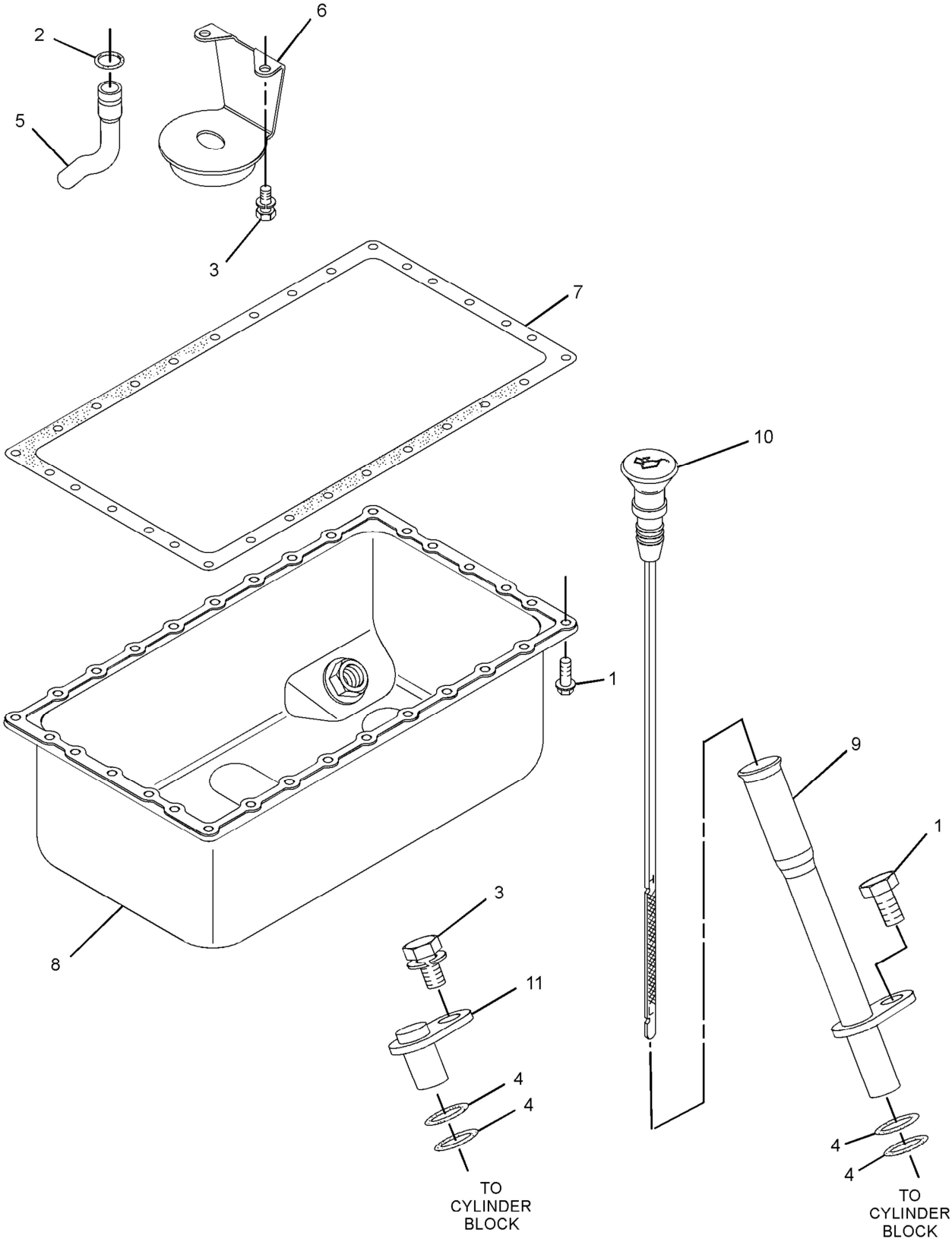

GRAPHIC #1 **<END>** g01528313

BASIC ENGINE

311-1886 PAN GP-OIL

SMCS-1302 **i03104792**

NOTE	REF NO	GRAPHIC REF	PART NUMBER	QTY	PART NAME 1 2 3 4 5 6 (PRODUCT LEVEL)	SEE PAGE
	1	1,2	**153-6833**	31	BOLT	
	2	2	**153-6835**	1	SEAL-O-RING	
	3	2	**153-6838**	3	BOLT	
	4	1,2	**153-6841**	4	SEAL-O-RING	
	5	1	**209-7084**	1	TUBE AS-GAUGE	
	6	2	**215-2605**	1	GASKET	
	7	2	**218-2333**	1	PAN-OIL	
	8	1	**236-3983**	1	GAUGE-OIL LEVEL (DIPSTICK) (ENGINE)	
	9	2	**305-0584**	1	STRAINER (ENGINE OIL)	
	10	2	**316-2275**	1	TUBE-OIL SUCTION	
	11	2	**319-7366**	1	PLUG	

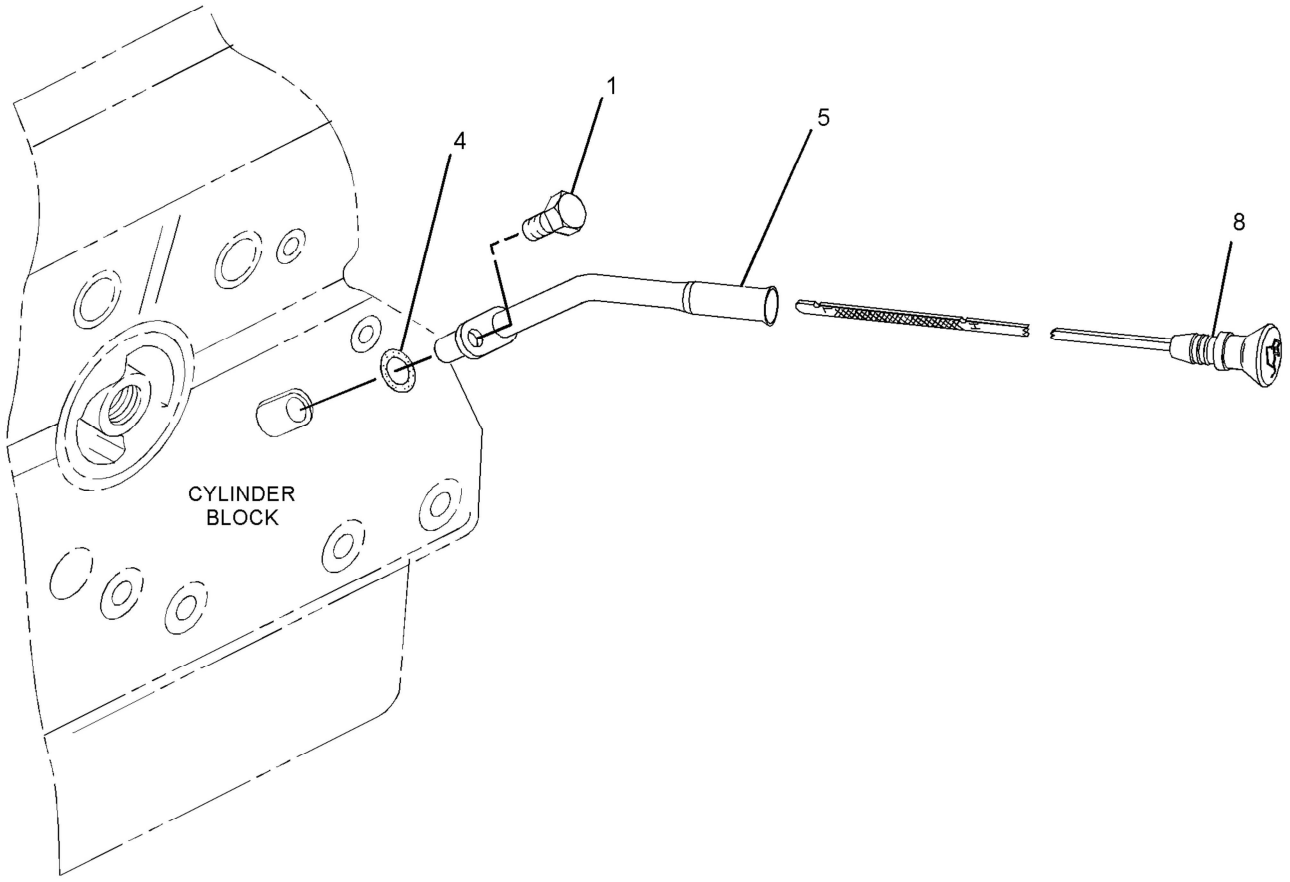

GRAPHIC #1 g01636233

311-1886 **PAN GP-OIL** *(contd.)* **i03104792**

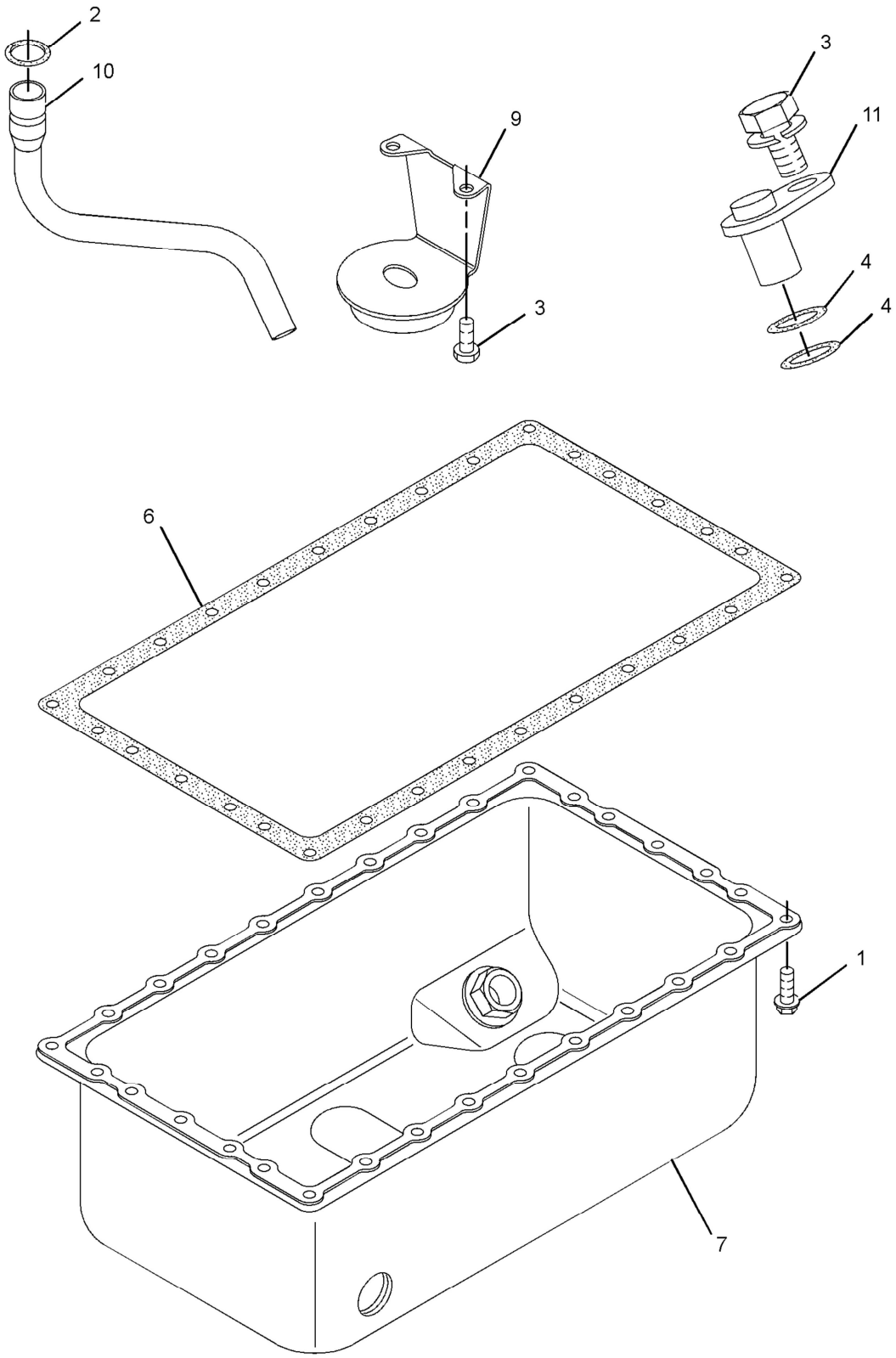

GRAPHIC #2 **<END>** g01636234

BASIC ENGINE

317-3037 PAN GP-OIL

SMCS-1302 **i02888560**

NOTE	REF NO	GRAPHIC REF	PART NUMBER	QTY	PART NAME 1 2 3 4 5 6 (PRODUCT LEVEL)	SEE PAGE
	1	1,2	**153-6833**	31	BOLT	
	2	2	**153-6835**	1	SEAL-O-RING	
	3	1,2	**153-6838**	3	BOLT	
	4	1	**153-6841**	4	SEAL-O-RING	
	5	1	**180-6118**	1	BOLT	
	6	1	**209-7088**	1	TUBE AS-GAUGE	
	7	2	**215-2605**	1	GASKET	
	8	2	**218-2333**	1	PAN-OIL	
	9	1	**228-7472**	1	GAUGE AS-OIL LEVEL (DIPSTICK) (ENGINE)	
	10	2	**305-0584**	1	STRAINER (ENGINE OIL)	
	11	2	**316-2275**	1	TUBE-OIL SUCTION	
	12	1	**319-7366**	1	PLUG	

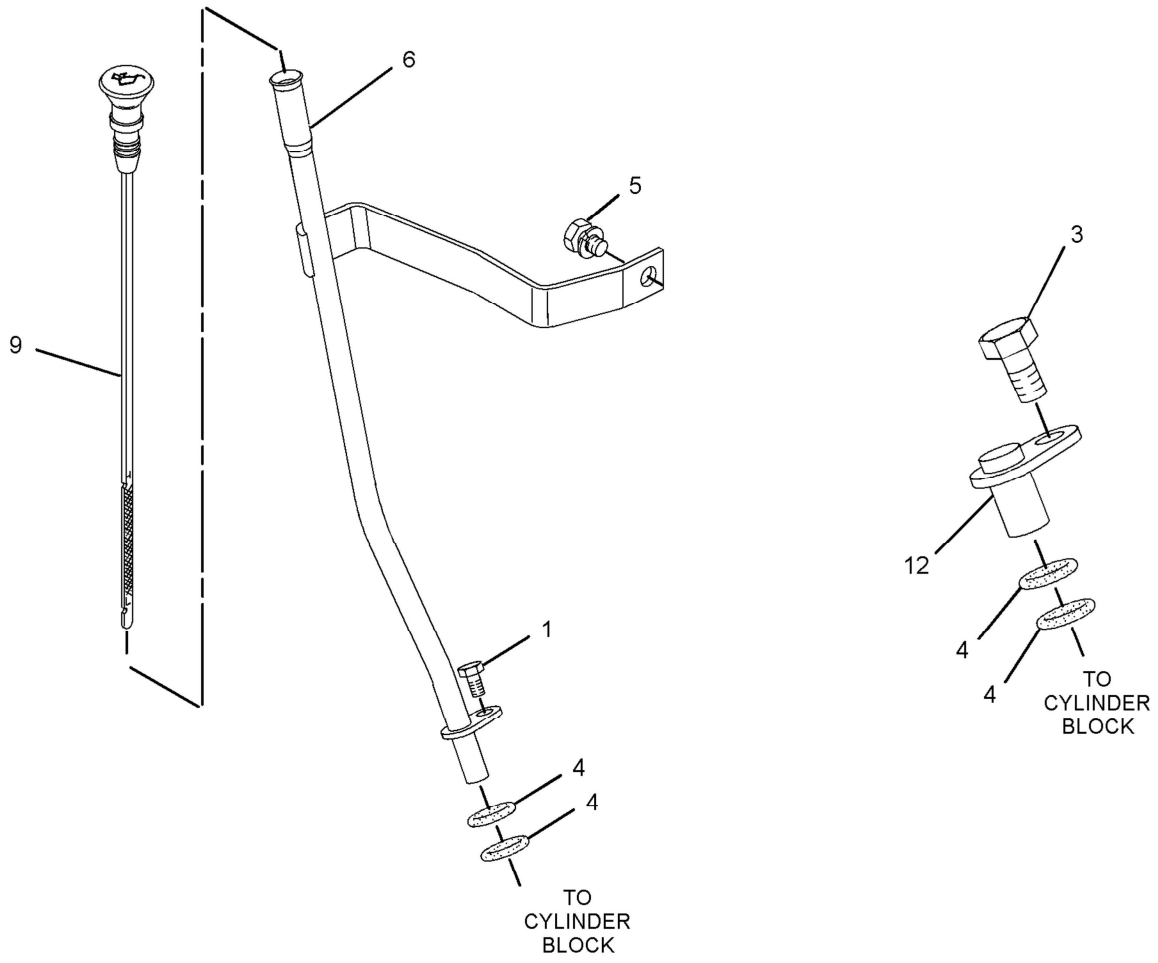

GRAPHIC #1 g01639954

317-3037 **PAN GP-OIL** *(contd.)* **i02888560**

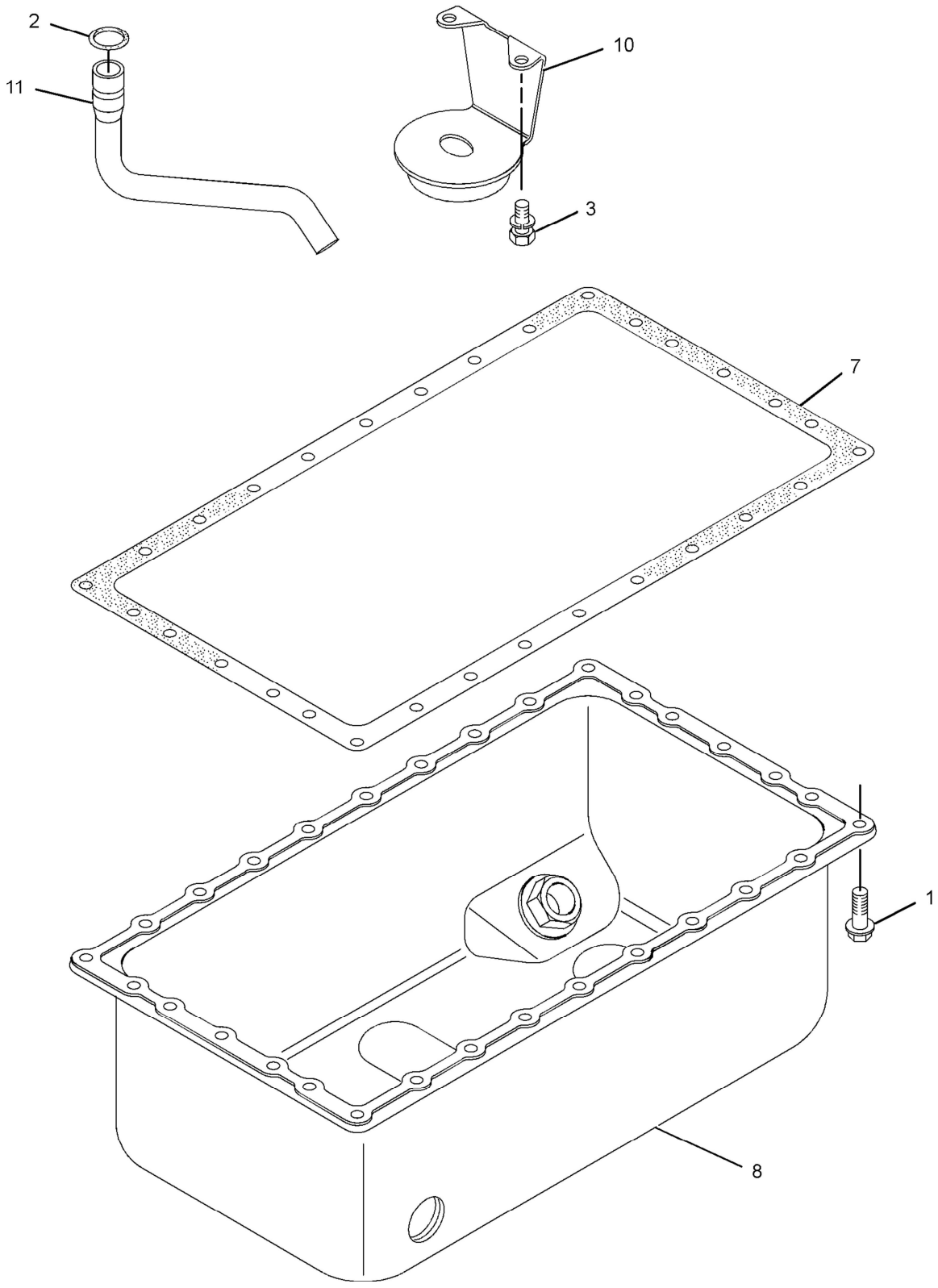

GRAPHIC #2 **<END>** g01639955

BASIC ENGINE

322-2416 PAN GP-OIL

SMCS-1302 **i02908396**

NOTE	REF NO	GRAPHIC REF	PART NUMBER	QTY	PART NAME 1 2 3 4 5 6 (PRODUCT LEVEL)	SEE PAGE
	1	1,2	**153-6833**	31	BOLT	
	2	2	**153-6835**	1	SEAL-O-RING	
	3	1,2	**153-6838**	3	BOLT	
	4	1	**153-6841**	4	SEAL-O-RING	
	5	2	**288-8814**	1	PIPE-OIL	
	6	2	**288-8813**	1	STRAINER (OIL PAN)	
	7	2	**215-2605**	1	GASKET	
	8	1	**229-5150**	1	TUBE AS (GAUGE)	
	9	1	**229-5151**	1	GAUGE-OIL LEVEL (DIPSTICK) (ENGINE)	
	10	2	**288-8812**	1	PAN (OIL)	
	11	1	**319-7366**	1	PLUG	

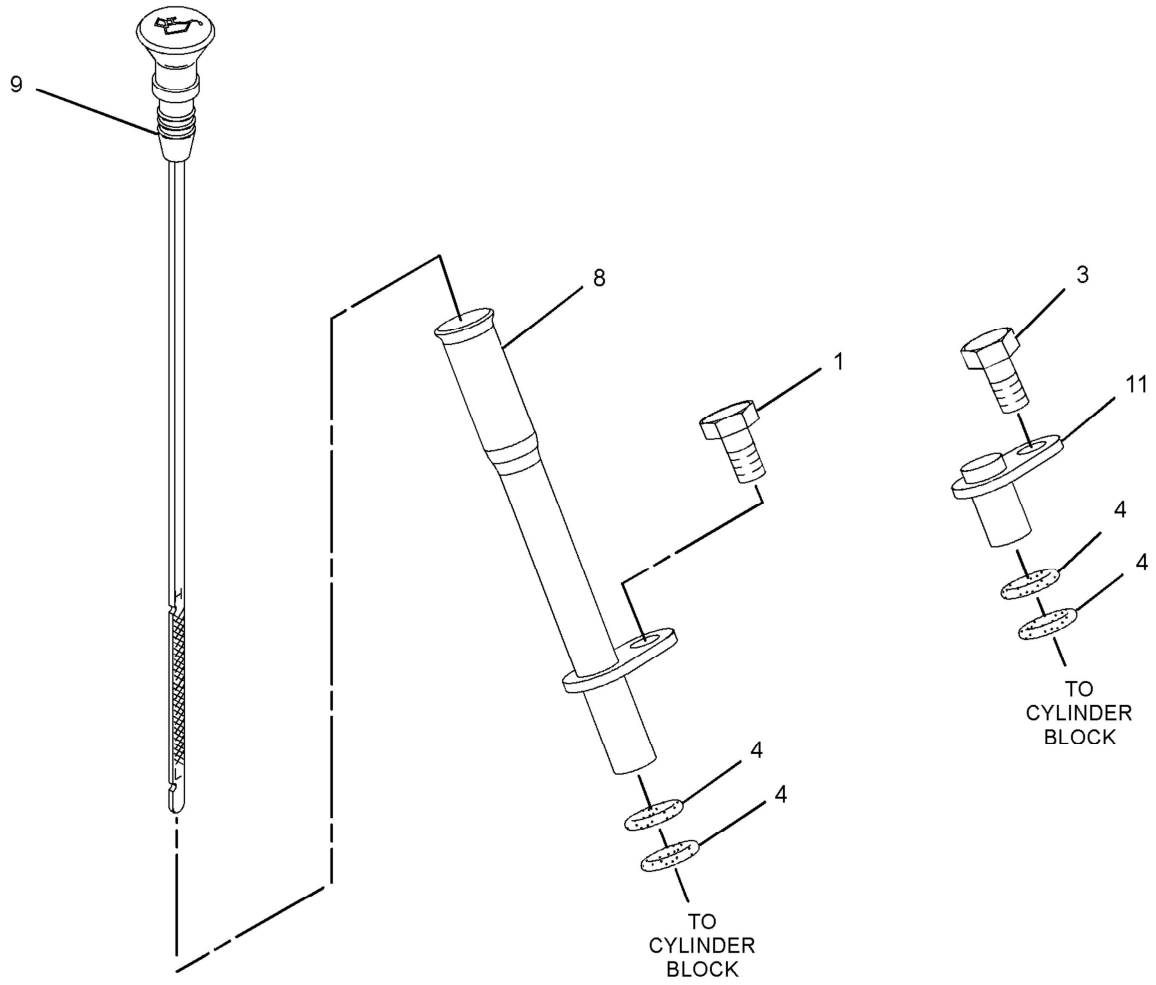

GRAPHIC #1 g01640340

322-2416 **PAN GP-OIL** *(contd.)* **i02908396**

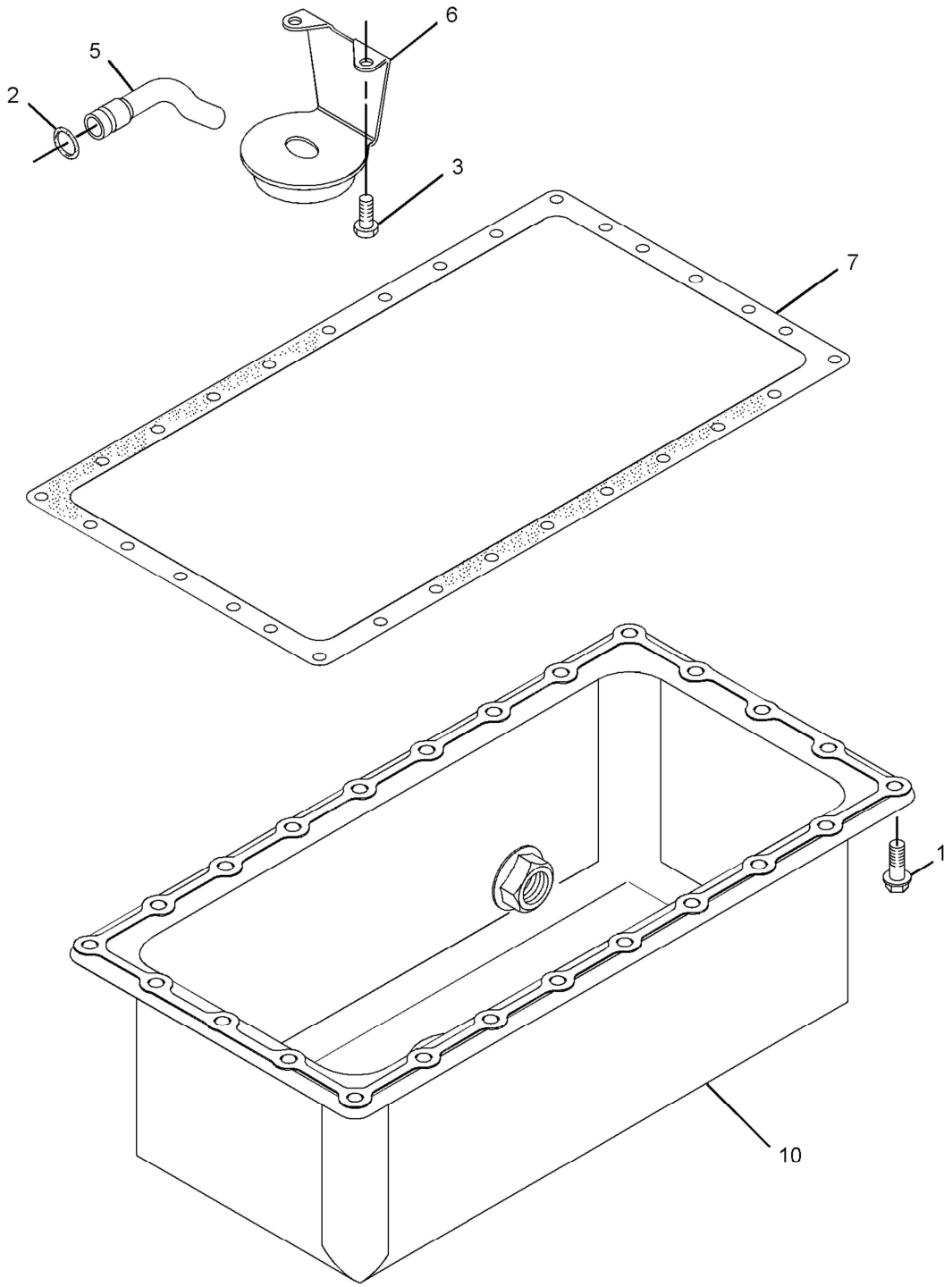

GRAPHIC #2 **<END>** g01640342

BASIC ENGINE

331-9610 PAN GP-OIL

SMCS-1302 **i03135545**

NOTE	REF NO	GRAPHIC REF	PART NUMBER	QTY	PART NAME 1 2 3 4 5 6 (PRODUCT LEVEL)	SEE PAGE
	1	1	**153-6833**	31	BOLT	
	2	1	**153-6835**	1	SEAL-O-RING	
	3	1	**153-6838**	3	BOLT	
	4	1	**153-6841**	1	SEAL-O-RING	
	5	1	**293-4786**	1	PIPE-SUCTION	
	6	1	**293-4785**	1	SCREEN-SUCTION	
	7	1	**160-3562**	1	PAN-OIL	
	8	1	**180-6118**	1	BOLT	
	9	1	**209-7088**	1	TUBE AS-GAUGE	
	10	1	**215-2605**	1	GASKET	
	11	1	**228-7472**	1	GAUGE AS-OIL LEVEL (DIPSTICK)	
	12	1	**289-6119**	2	SEAL-O-RING	
	13	1	**319-7366**	1	PLUG	

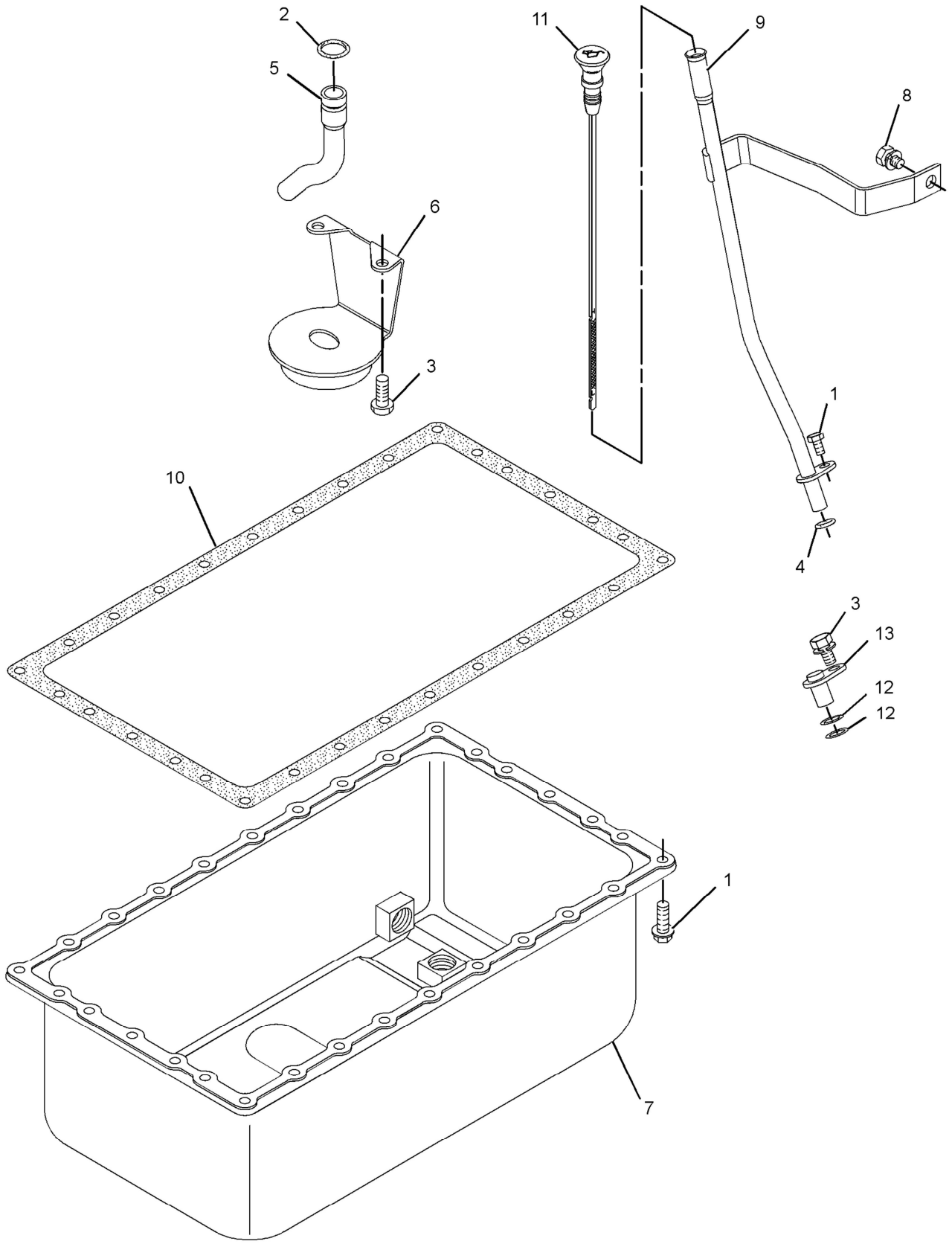

GRAPHIC #1 **<END>** g01622554

BASIC ENGINE

328-3297 PARTS GP-MISCELLANEOUS

SMCS-1000, 1800 **i03103988**

NOTE	REF NO	GRAPHIC REF	PART NUMBER	QTY	PART NAME 1 2 3 4 5 6 (PRODUCT LEVEL)	SEE PAGE
	1	1	**095-1708**	1	SEAL-O-RING	

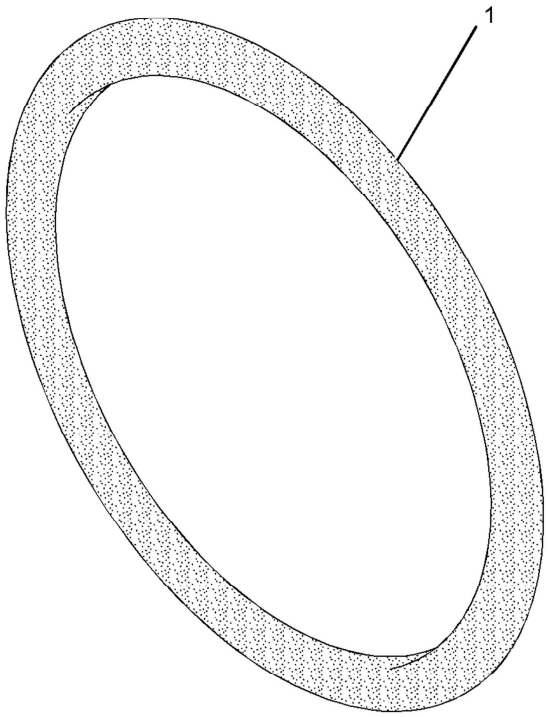

GRAPHIC #1 **<END>** g01629473

308-2286 PISTON & ROD GP

SMCS-1225 **i02752166**

NOTE	REF NO	GRAPHIC REF	PART NUMBER	QTY	PART NAME 1 2 3 4 5 6 (PRODUCT LEVEL)	SEE PAGE
	1	1	**154-0867**	4	ROD AS-CONNECTING	
					(EACH INCLUDES)	
	1A	1	**154-0869**	1	BUSHING	
	1B	1	**154-0870**	2	BOLT	
	1C	1	**154-0871**	2	NUT	
	2	1	**154-0873**	1	PIN	
	3	1	**154-0874**	2	CLIP	
	4	1	**270-6968**	4	PISTON AS	
					(EACH INCLUDES)	
	4A	1	**270-6970**	1	KIT-PISTON RING	

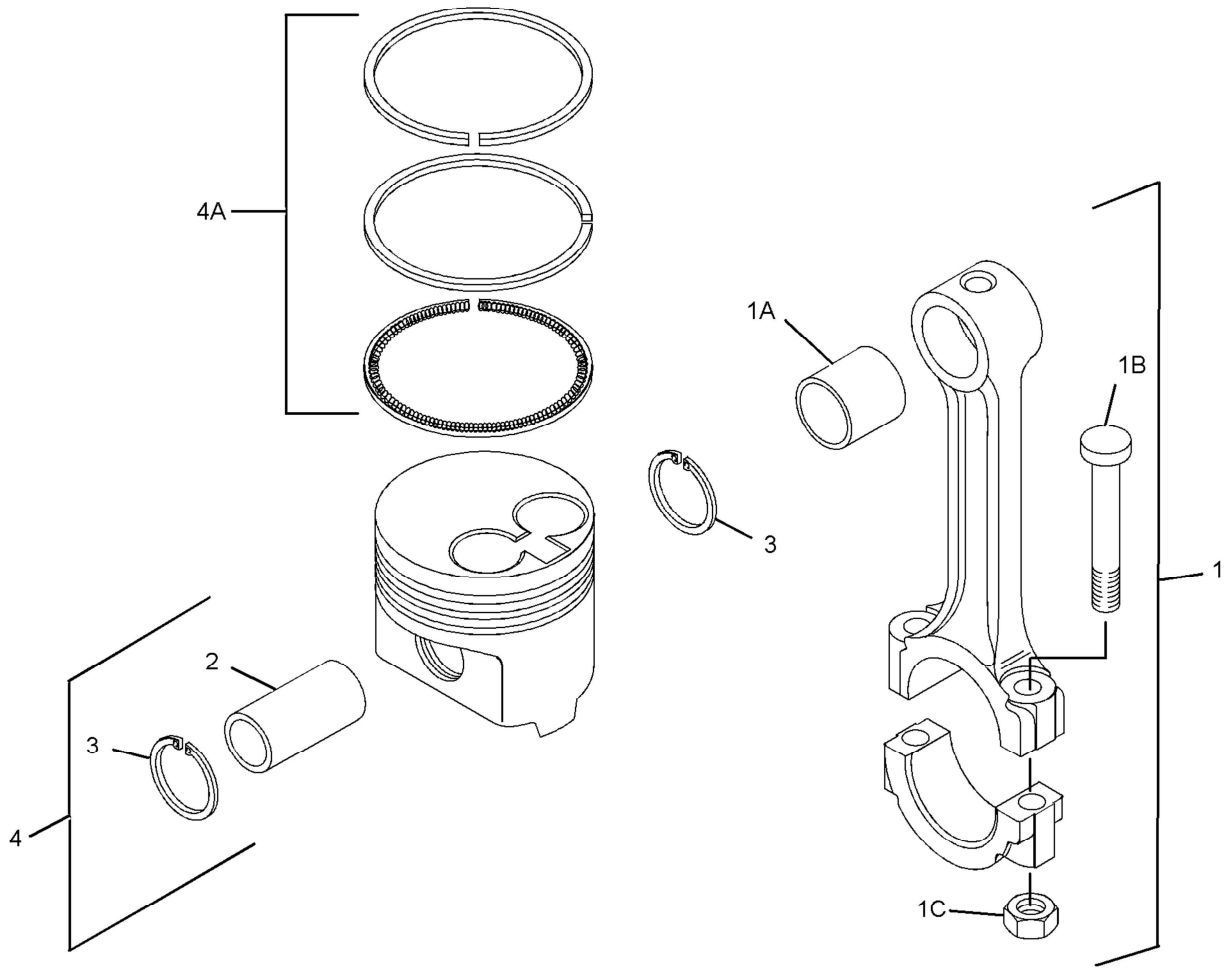

GRAPHIC #1 **<END>** g01410074

BASIC ENGINE

309-6714 PISTON & ROD GP

SMCS-1225 **i02770511**

NOTE	REF NO	GRAPHIC REF	PART NUMBER	QTY	PART NAME 1 2 3 4 5 6 (PRODUCT LEVEL)	SEE PAGE
	1	1	**154-0867**	4	ROD AS-CONNECTING	
					(EACH INCLUDES)	
	1A	1	**154-0869**	1	BUSHING	
	1B	1	**154-0870**	2	BOLT	
	1C	1	**154-0871**	2	NUT	
	2	1	**154-0873**	4	PIN	
	3	1	**154-0874**	8	CLIP	
	4	1	**297-3080**	4	PISTON AS	
					(EACH INCLUDES)	
	4A	1	**217-1456**	1	KIT-PISTON RING	

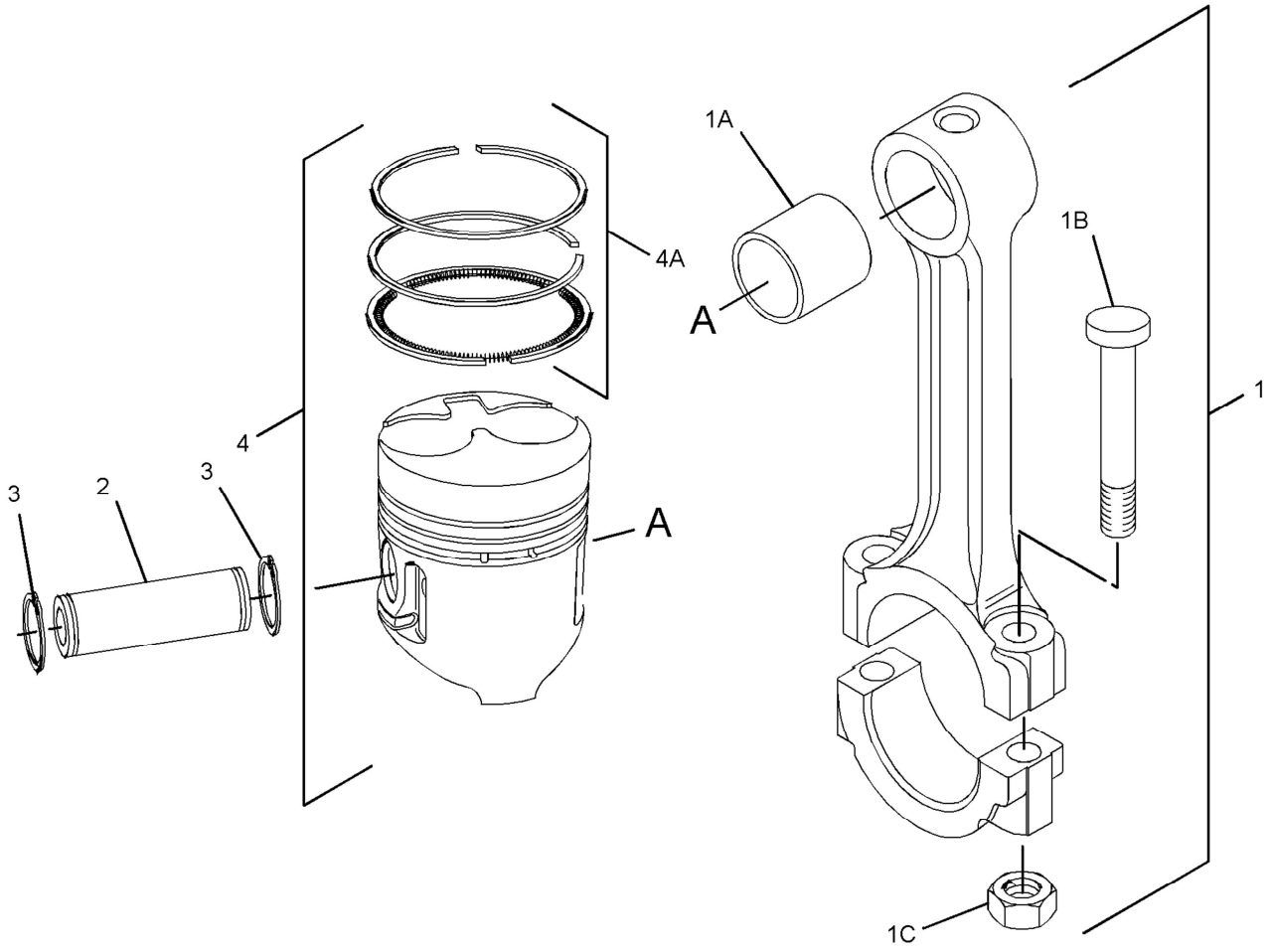

GRAPHIC #1 **<END>** g01415430

BASIC ENGINE

322-2426 PLUG GP-ENGINE

SMCS-1100 **i02898563**

NOTE	REF NO	GRAPHIC REF	PART NUMBER	QTY	PART NAME 1 2 3 4 5 6 (PRODUCT LEVEL)	SEE PAGE
	1	1	**153-6835**	1	SEAL-O-RING	
	2	1	**161-8273**	1	PLUG	

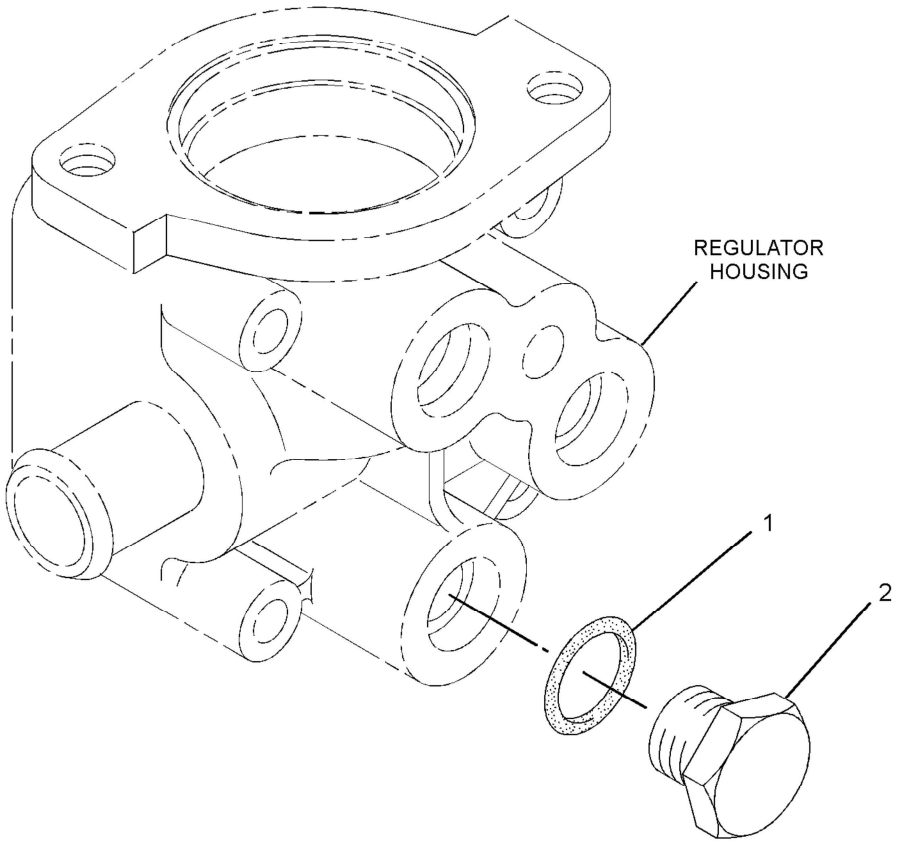

GRAPHIC #1 **<END>** g01514601

BASIC ENGINE

323-9157 PLUG GP-ENGINE

SMCS-1100 **i02908563**

NOTE	REF NO	GRAPHIC REF	PART NUMBER	QTY	PART NAME 1 2 3 4 5 6 (PRODUCT LEVEL)	SEE PAGE
	1	1	**153-5936**	2	WASHER	
	2	1	**183-1165**	1	PLUG	
	3	1	**308-1222**	1	ADAPTER	

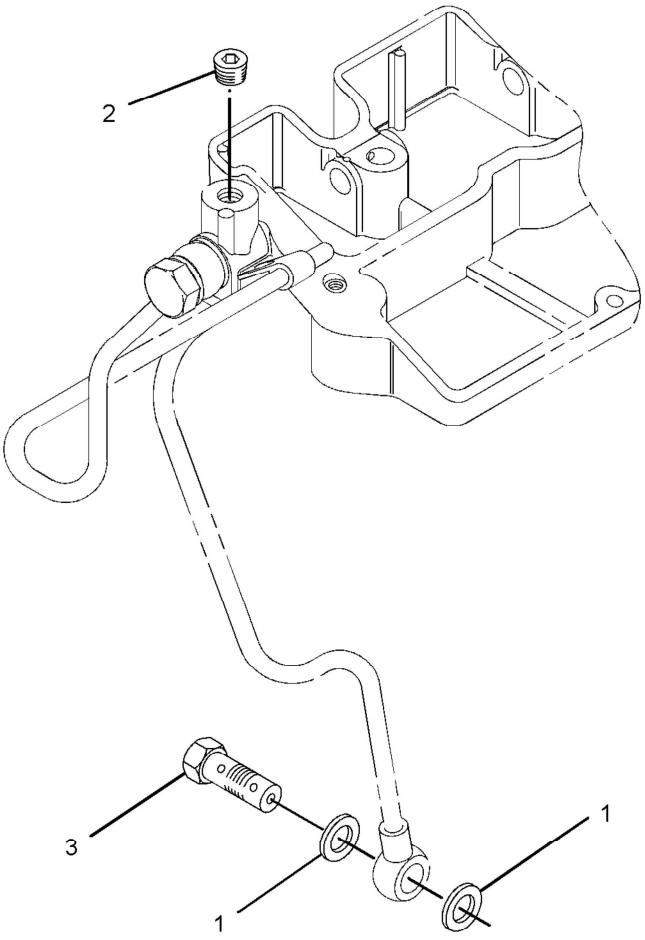

GRAPHIC #1 **<END>** g01623770

309-6720 PLUG GP-OIL PAN–ENGINE

SMCS-1302 **i02786465**

NOTE	REF NO	GRAPHIC REF	PART NUMBER	QTY	PART NAME 1 2 3 4 5 6 (PRODUCT LEVEL)	SEE PAGE
	1	1	**153-6412**	2	WASHER	
	2	1	**218-2334**	2	PLUG-DRAIN (ENGINE OIL PAN)	

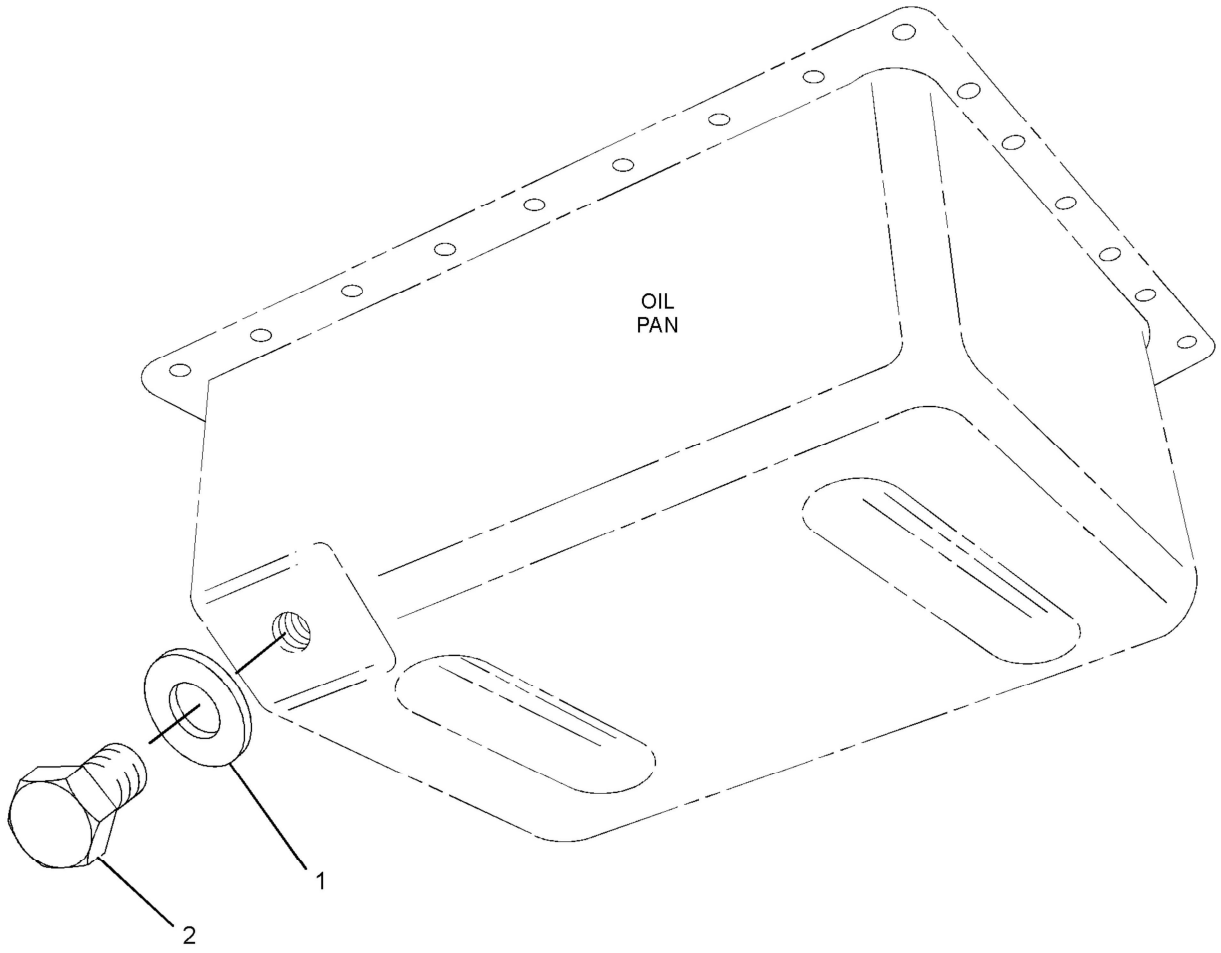

GRAPHIC #1 **<END>** g01347011

BASIC ENGINE

322-2420 PLUG GP-OIL PAN

SMCS-1302 **i02936709**

NOTE	REF NO	GRAPHIC REF	PART NUMBER	QTY	PART NAME 1 2 3 4 5 6 (PRODUCT LEVEL)	SEE PAGE
	1	1	**153-6832**	2	WASHER	
	2	1	**165-3605**	2	PLUG-DRAIN (ENGINE OIL DRAIN)	

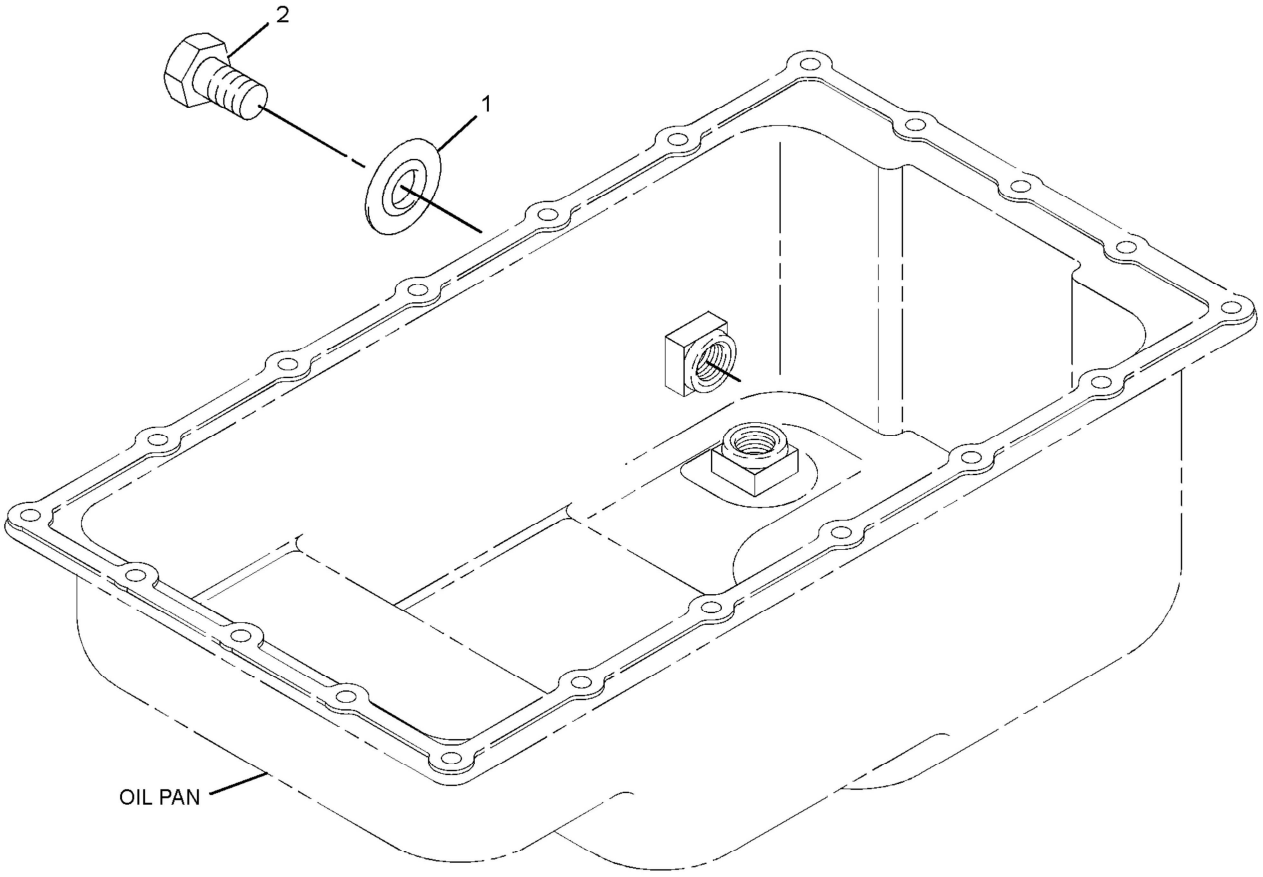

GRAPHIC #1 **<END>** g01513429

322-2422 PULLEY GP-AUXILIARY DRIVE

SMCS-1205, 1207 **i02938839**

NOTE	REF NO	GRAPHIC REF	PART NUMBER	QTY	PART NAME 1 2 3 4 5 6 (PRODUCT LEVEL)	SEE PAGE
	1	1	**165-2142**	3	BOLT	
	2	1	**238-9621**	1	PULLEY	

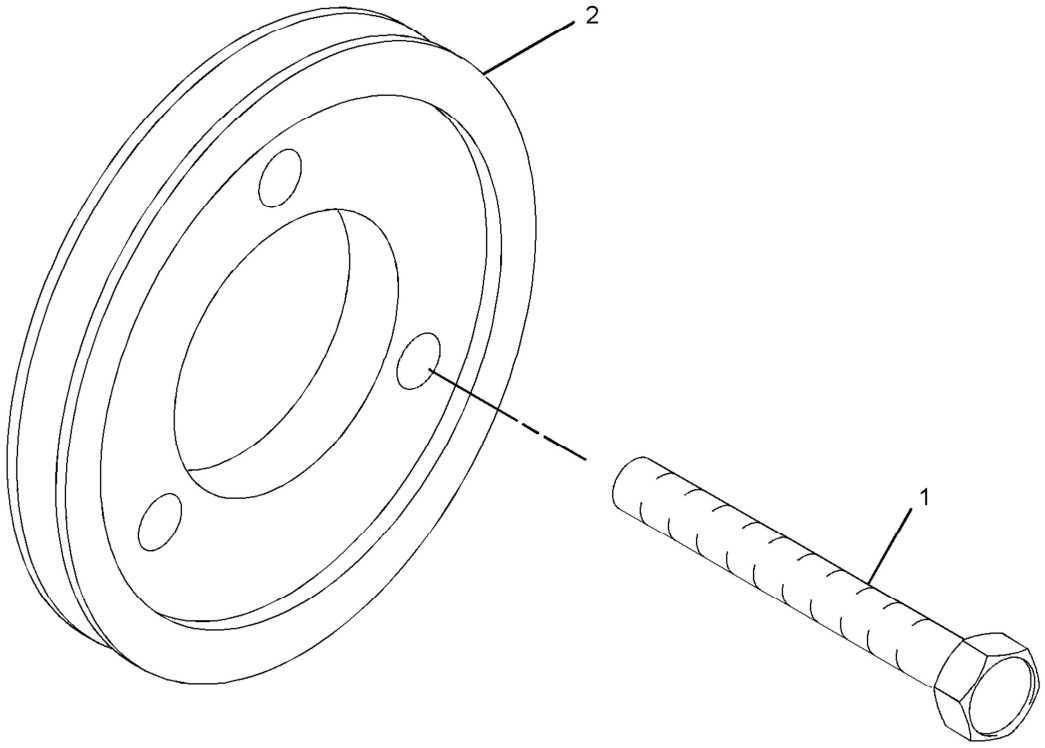

GRAPHIC #1 **<END>** g01636445

BASIC ENGINE

308-2300 PULLEY GP-CRANKSHAFT

SMCS-1205 **i02939569**

NOTE	REF NO	GRAPHIC REF	PART NUMBER	QTY	PART NAME 1 2 3 4 5 6 (PRODUCT LEVEL)	SEE PAGE
	1	1	**153-6492**	1	KEY-WOODRUFF	
	2	1	**154-1880**	1	NUT	
	3	1	**321-6738**	1	PULLEY-CRANKSHAFT	

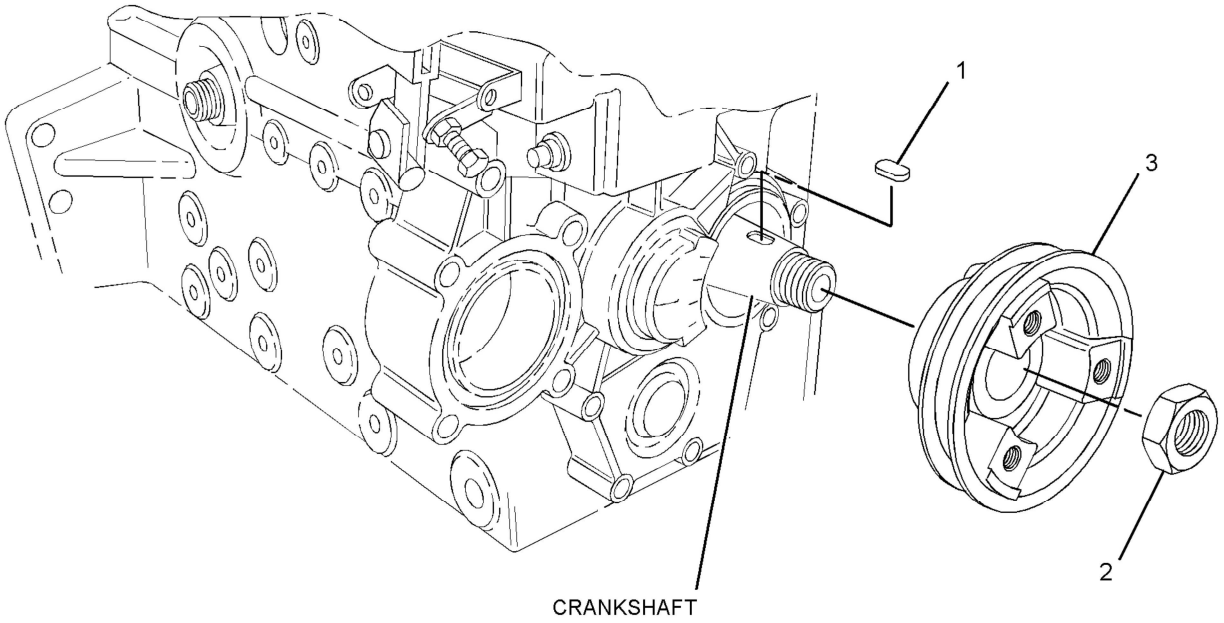

GRAPHIC #1 **<END>** g01390599

BASIC ENGINE

321-6740 PULLEY GP-CRANKSHAFT

SMCS-1205 **i03164783**

NOTE	REF NO	GRAPHIC REF	PART NUMBER	QTY	PART NAME 1 2 3 4 5 6 (PRODUCT LEVEL)	SEE PAGE
	1	1	**153-6492**	1	KEY-WOODRUFF	
	2	1	**154-1880**	1	NUT	
	3	1	**321-6738**	1	PULLEY-CRANKSHAFT	

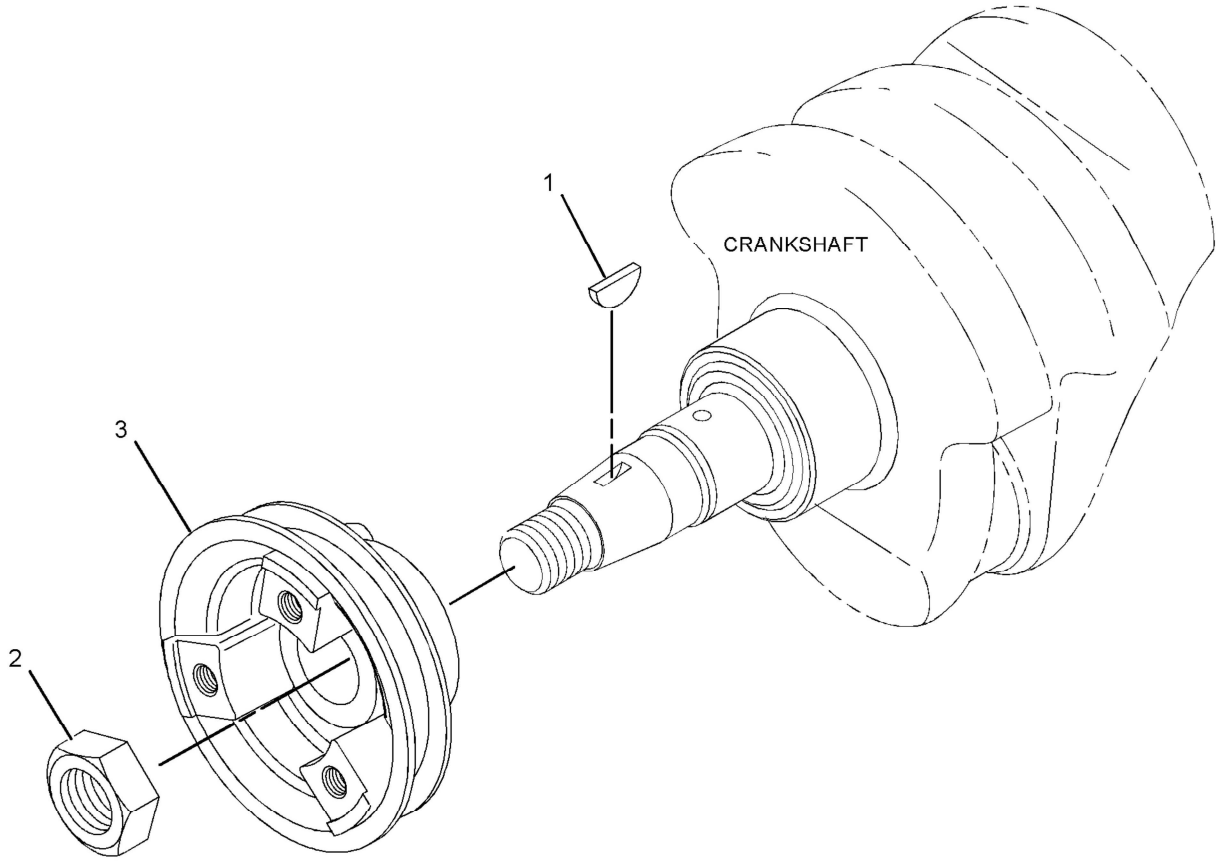

GRAPHIC #1 **<END>** g01622072

BASIC ENGINE

308-2294 PULLEY GP-WATER PUMP

SMCS-1384 **i02743517**

NOTE	REF NO	GRAPHIC REF	PART NUMBER	QTY	PART NAME 1 2 3 4 5 6 (PRODUCT LEVEL)	SEE PAGE
	1	1	**154-1822**	1	PULLEY-WATER PUMP	

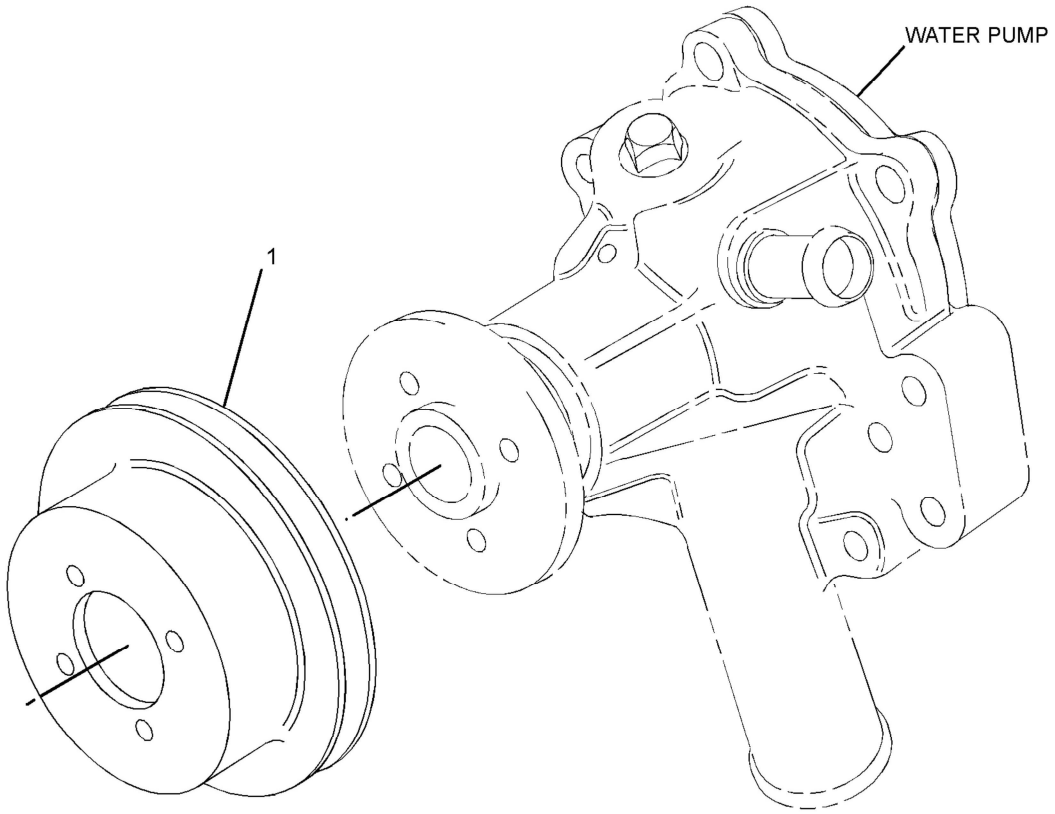

GRAPHIC #1 **<END>** g01412305

311-9027 PULLEY GP-WATER PUMP

SMCS-1384 **i02770488**

NOTE	REF NO	GRAPHIC REF	PART NUMBER	QTY	PART NAME 1 2 3 4 5 6 (PRODUCT LEVEL)	SEE PAGE
	1	1	**191-0551**	1	PULLEY-WATER PUMP	

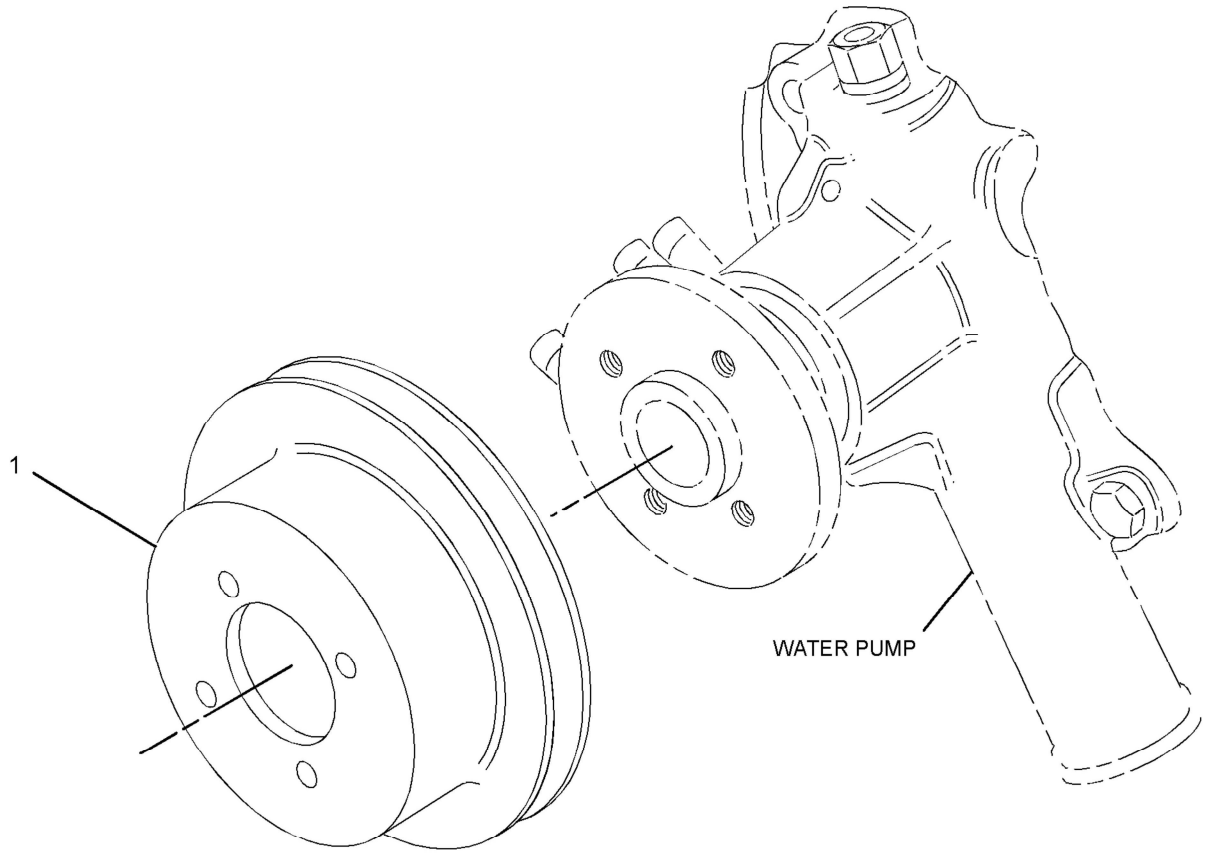

GRAPHIC #1 **<END>** g01418299

BASIC ENGINE

308-2306 V-BELT GP—FAN DRIVE

SMCS-1357 **i03202150**

NOTE	REF NO	GRAPHIC REF	PART NUMBER	QTY	PART NAME 1 2 3 4 5 6 (PRODUCT LEVEL)	SEE PAGE
	1	1	**211-5172**	1	V-BELT (WATER PUMP)	

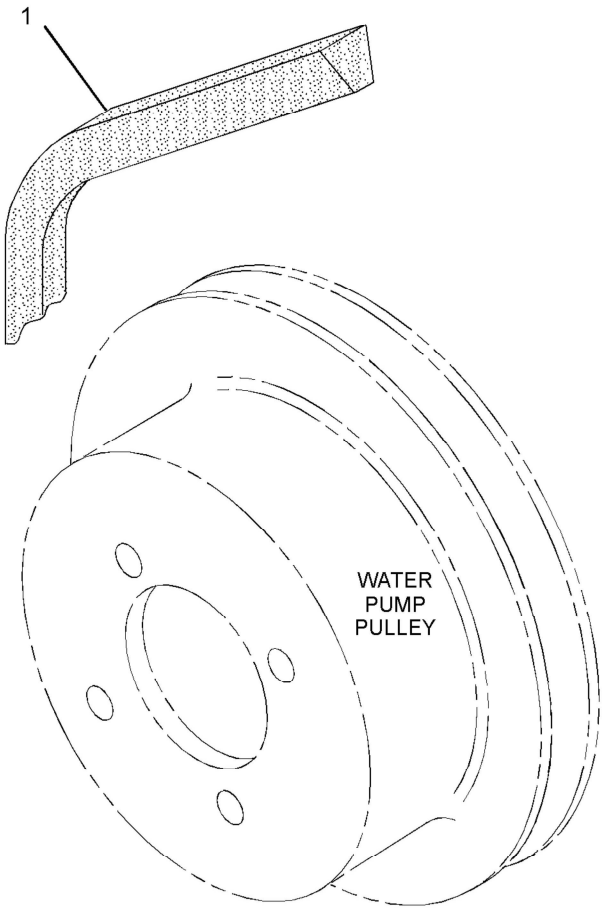

GRAPHIC #1 **<END>** g01407842

BASIC ENGINE

311-9029 V-BELT GP

SMCS-1357 **i03202152**

NOTE	REF NO	GRAPHIC REF	PART NUMBER	QTY	PART NAME 1 2 3 4 5 6 (PRODUCT LEVEL)	SEE PAGE
	1	1	**211-5172**	1	V-BELT	

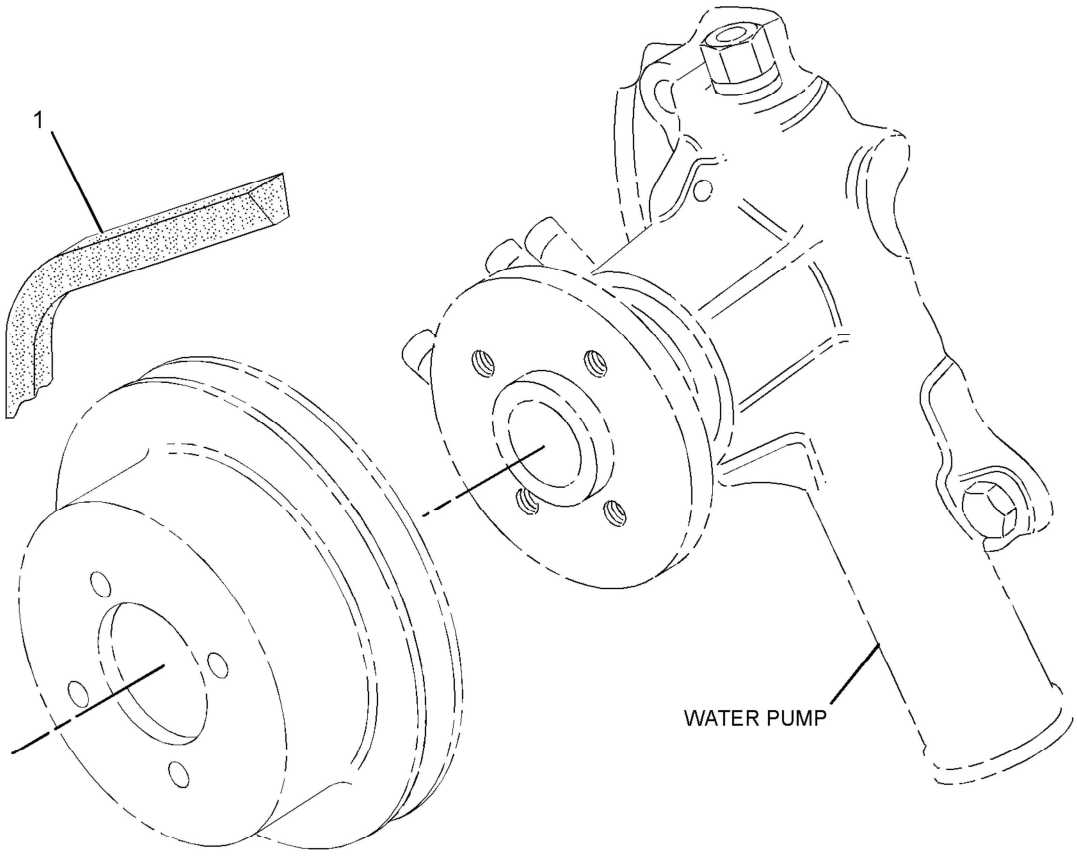

GRAPHIC #1 **<END>** g01418782

BASIC ENGINE

317-3039 V-BELT GP

SMCS-1357 **i03202153**

NOTE	REF NO	GRAPHIC REF	PART NUMBER	QTY	PART NAME 1 2 3 4 5 6 (PRODUCT LEVEL)	SEE PAGE
	1	1	**295-0887**	1	V-BELT (WATER PUMP)	

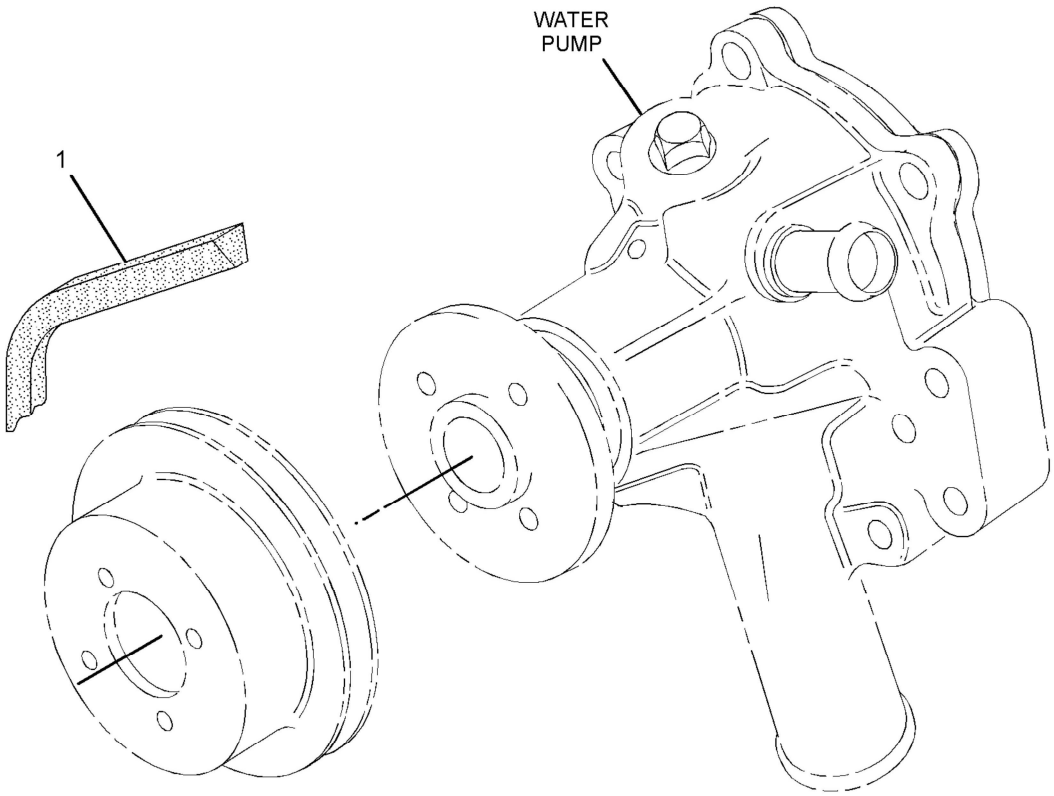

GRAPHIC #1 **<END>** g01421607

293-2167 VALVE MECHANISM GP

PART OF 308-2285, 309-6716 VALVE MECHANISM GP

SMCS-1102, 1121, 1123, 1209 **i02869546**

NOTE	REF NO	GRAPHIC REF	PART NUMBER	QTY	PART NAME 1 2 3 4 5 6 (PRODUCT LEVEL)	SEE PAGE
	1	1	**154-1243**	6	WASHER	
	2	1	**153-5587**	8	SCREW-ADJUSTMENT	
	3	1	**153-5590**	8	NUT	
	4	1	**153-6835**	1	SEAL-O-RING	
	5	1	**206-3499**	1	SHAFT-ROCKER ARM	
	7	1	**154-1240**	4	LEVER-RH	
	8	1	**154-1241**	4	LEVER-LH	
	9	1	**154-1242**	3	SPRING	

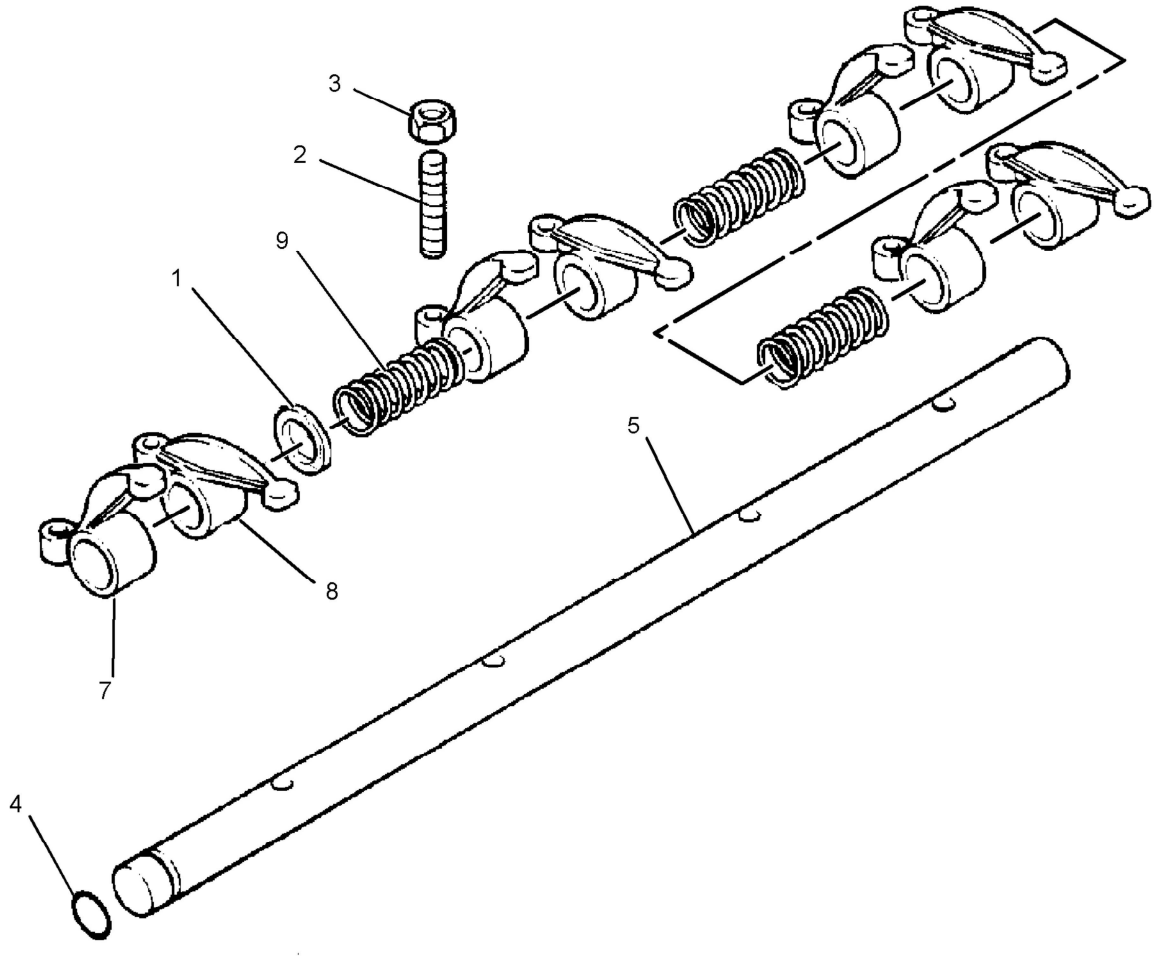

GRAPHIC #1 **<END>** g01395519

308-2285 VALVE MECHANISM GP

SMCS-1102, 1121, 1123, 1209 **i02752240**

NOTE	REF NO	GRAPHIC REF	PART NUMBER	QTY	PART NAME 1 2 3 4 5 6 (PRODUCT LEVEL)	SEE PAGE
	1	1	**153-5961**	2	BOLT	
	2	1	**153-7988**	4	NUT	
	3	1	**154-1246**	4	STUD	
	4	1	**154-1248**	8	ROD	
	5	1	**154-1249**	8	TAPPET	
	6	1	**217-2752**	1	GASKET (VALVE BRACKET)	
Y	7	1	**293-2167**	1	VALVE MECHANISM GP	117

Y-SEPARATE ILLUSTRATION

308-2285 **VALVE MECHANISM GP** *(contd.)* **i02752240**

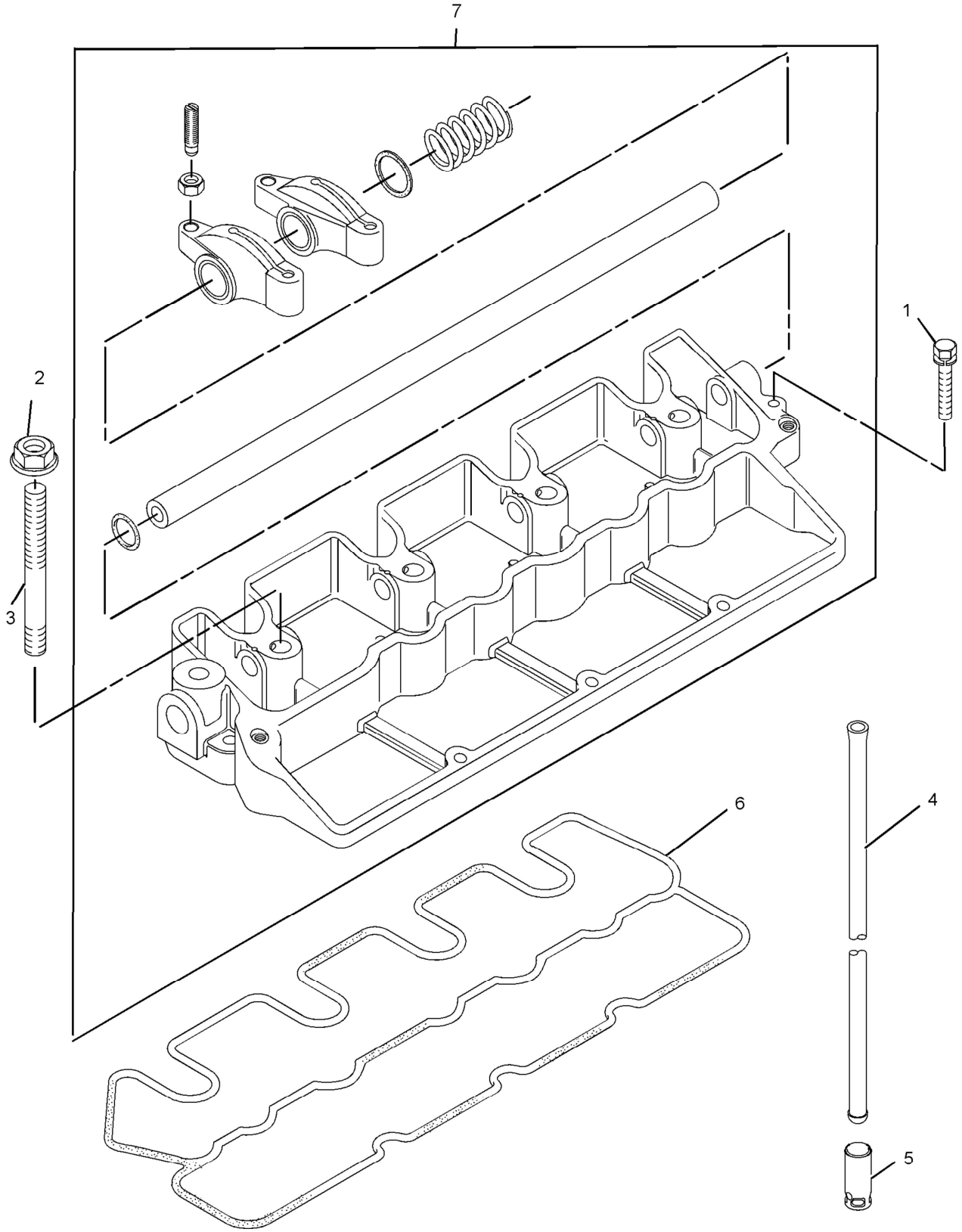

GRAPHIC #1 **<END>** g01409366

BASIC ENGINE

309-6716 VALVE MECHANISM GP

SMCS-1102, 1121, 1123, 1209 **i02770518**

NOTE	REF NO	GRAPHIC REF	PART NUMBER	QTY	PART NAME 1 2 3 4 5 6 (PRODUCT LEVEL)	SEE PAGE
	1	1	**153-5961**	2	BOLT	
	2	1	**153-7988**	4	NUT	
	3	1	**154-1246**	4	STUD	
	4	1	**154-1248**	8	ROD	
	5	1	**154-1249**	8	TAPPET	
	6	1	**217-2752**	1	GASKET (VALVE BRACKET)	
Y	7	1	**293-2167**	1	VALVE MECHANISM GP	117

Y-SEPARATE ILLUSTRATION

309-6716 **VALVE MECHANISM GP** *(contd.)* **i02770518**

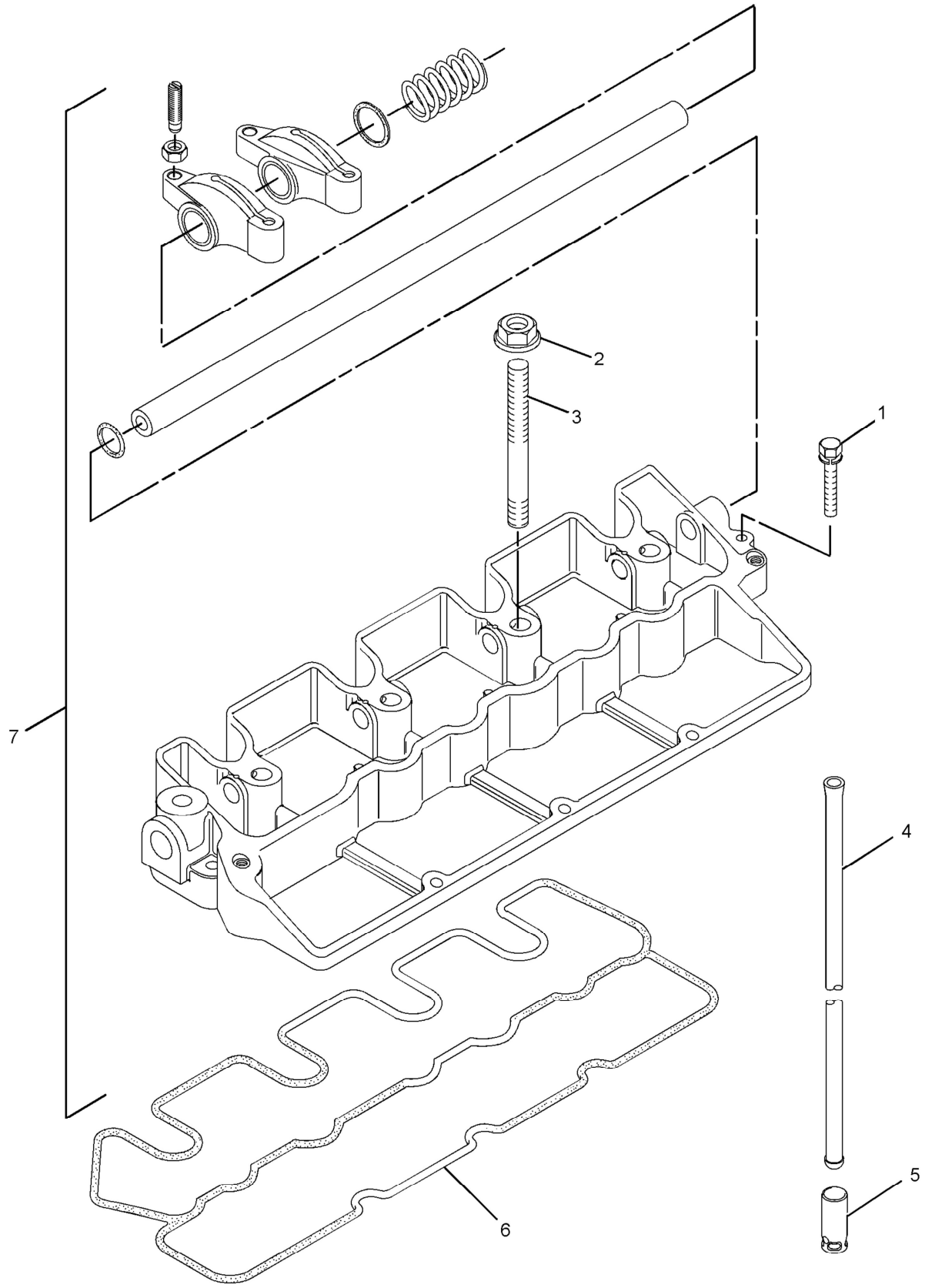

GRAPHIC #1 **<END>** g01419056

LUBRICATION SYSTEM

308-2299 CONNECTION GP-OIL–ENGINE

SMCS-1307 **i02752255**

NOTE	REF NO	GRAPHIC REF	PART NUMBER	QTY	PART NAME 1 2 3 4 5 6 (PRODUCT LEVEL)	SEE PAGE
	1	1	**153-6879**	1	STUD-HOLLOW	
	2	1	**160-4826**	4	CLAMP-HOSE	
	3	1	**238-9145**	1	HOSE	
	4	1	**256-4813**	1	HOSE	

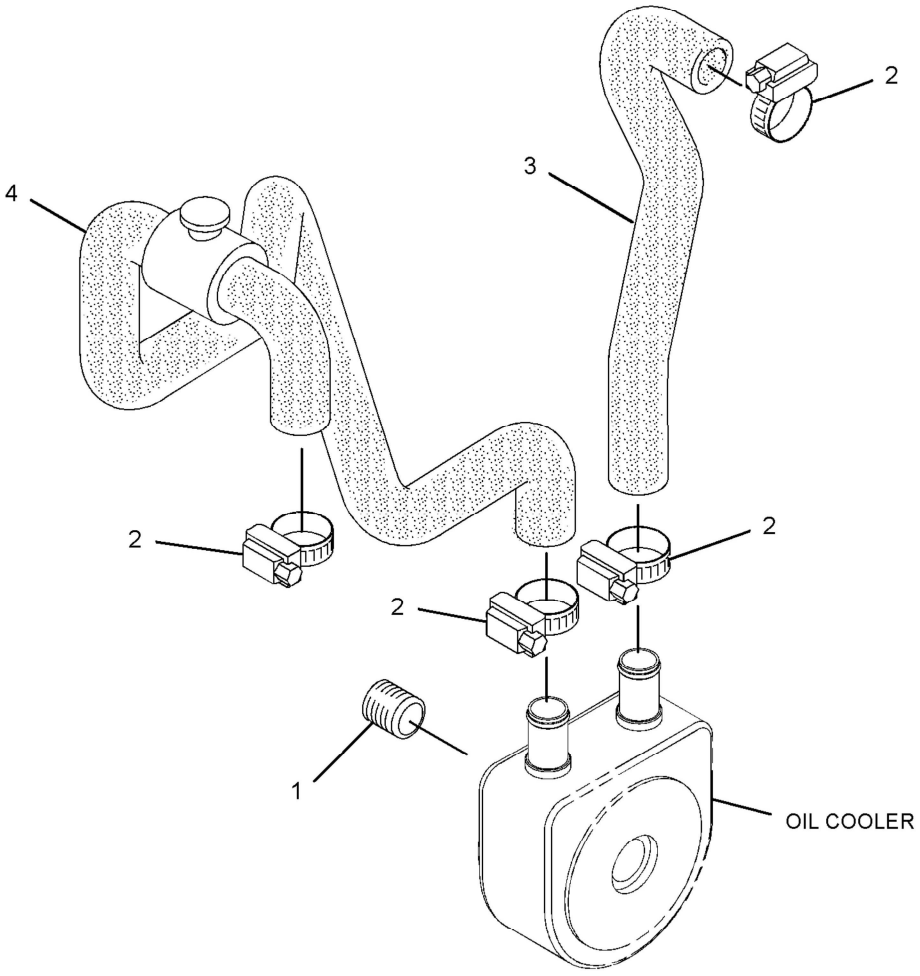

GRAPHIC #1 **<END>** g01415007

308-2297 FILLER GP-ENGINE OIL–ENGINE

SMCS-1316 **i03195006**

NOTE	REF NO	GRAPHIC REF	PART NUMBER	QTY	PART NAME 1 2 3 4 5 6 (PRODUCT LEVEL)	SEE PAGE
	1	1	**153-5933**	1	SEAL (ENGINE OIL FILL CAP)	
	2	1	**217-7358**	1	CAP-OIL FILLER (ENGINE)	
	3	1	**288-6593**	1	SEAL (ENGINE OIL FILL CAP)	
	4	1	**289-6120**	1	CAP-OIL FILLER (ENGINE)	

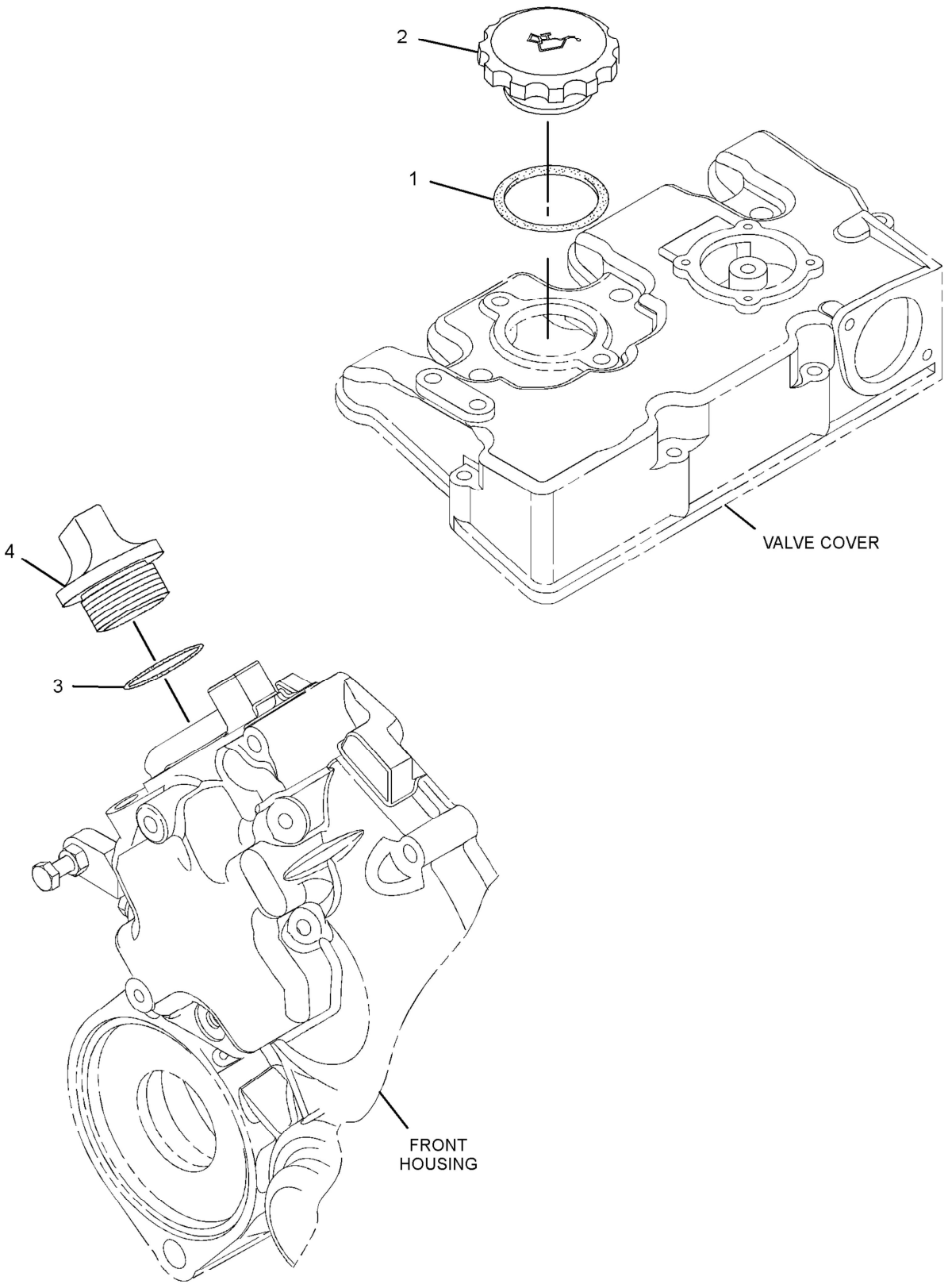

GRAPHIC #1 **<END>** g01412730

LUBRICATION SYSTEM

322-2421 FILLER GP-ENGINE OIL

SMCS-1316 **i02908392**

NOTE	REF NO	GRAPHIC REF	PART NUMBER	QTY	PART NAME 1 2 3 4 5 6 (PRODUCT LEVEL)	SEE PAGE
	1	1	**153-5933**	2	SEAL (ENGINE OIL FILL)	
	2	1	**153-7640**	2	BOLT	
	3	1	**209-1355**	1	FILLER-OIL	
	4	1	**9X-8256**	2	WASHER (6.6X12X2-MM THK)	
	5	1	**211-8559**	1	SEAL-O-RING	
	6	1	**217-7358**	2	CAP-OIL FILLER (ENGINE)	
	7	1	**288-6593**	1	SEAL (ENGINE OIL FILL CAP)	
	8	1	**289-6120**	1	CAP-OIL FILLER (ENGINE)	

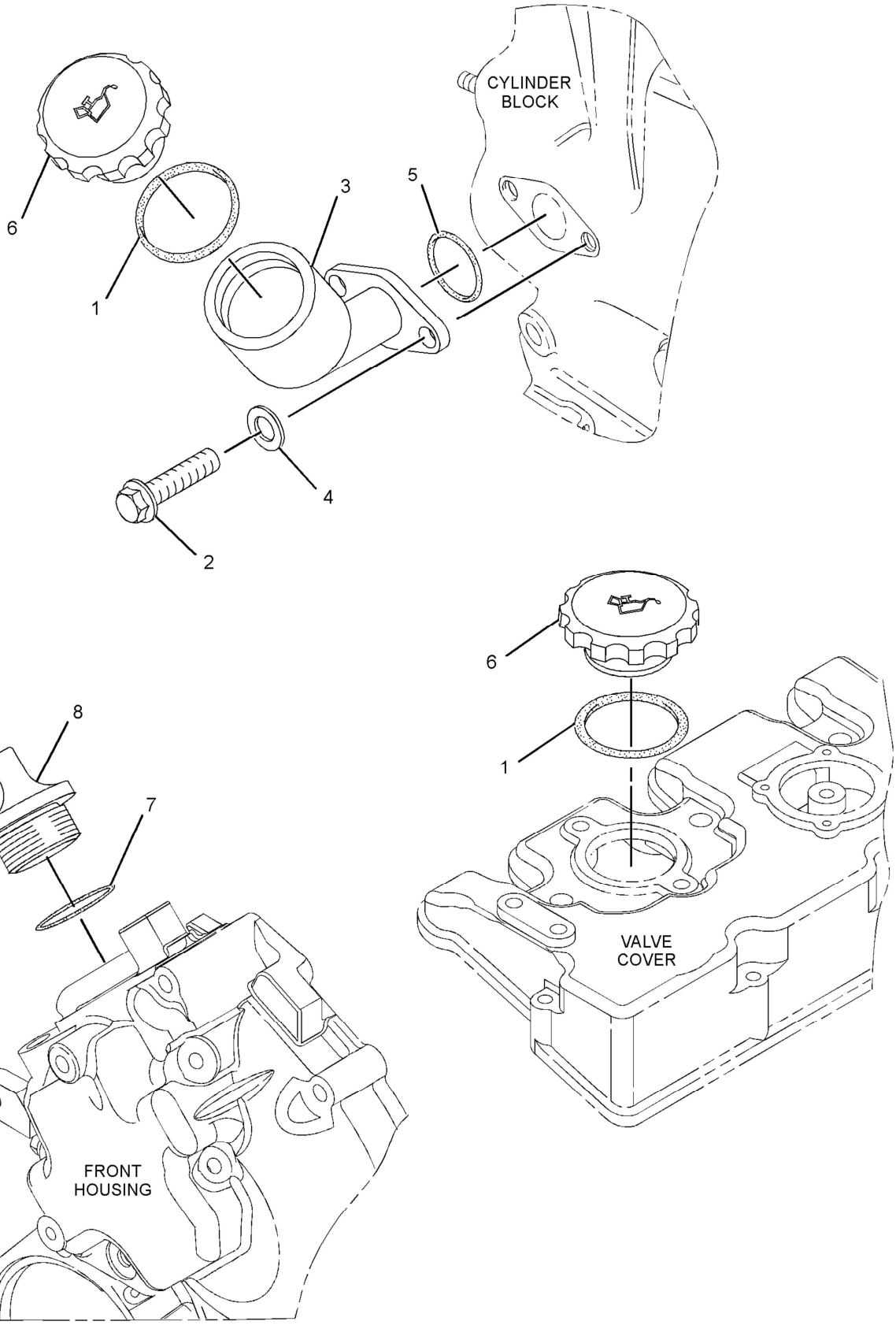

GRAPHIC #1 **<END>** g01660474

LUBRICATION SYSTEM

308-2298 FILTER GP-ENGINE OIL

SMCS-1306, 1308 **i02752264**

NOTE	REF NO	GRAPHIC REF	PART NUMBER	QTY	PART NAME 1 2 3 4 5 6 (PRODUCT LEVEL)	SEE PAGE
	1	1	**220-1523**	1	FILTER AS-ENGINE OIL	

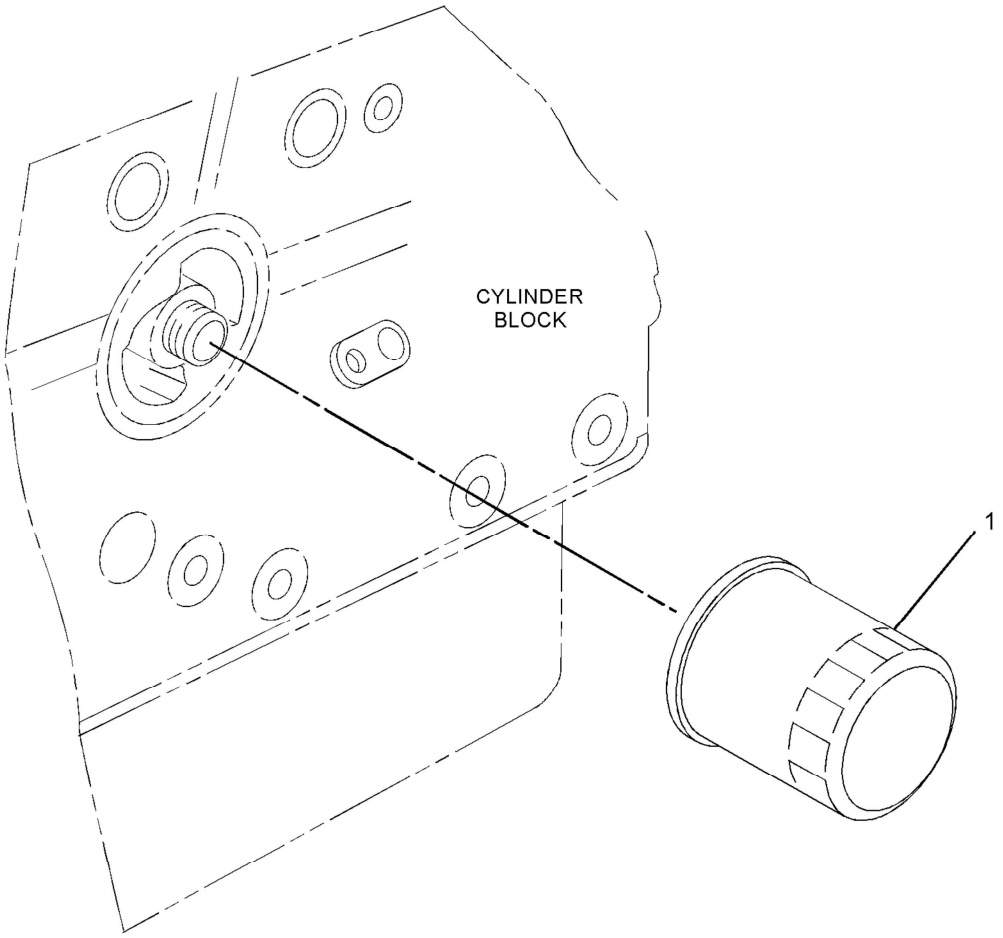

GRAPHIC #1 **<END>** g01389723

LUBRICATION SYSTEM

308-4735 MOUNTING GP-ENGINE OIL FILTER

SMCS-1306, 1308 **i02786451**

NOTE	REF NO	GRAPHIC REF	PART NUMBER	QTY	PART NAME 1 2 3 4 5 6 (PRODUCT LEVEL)	SEE PAGE
	1	1	**153-6879**	1	STUD-HOLLOW	

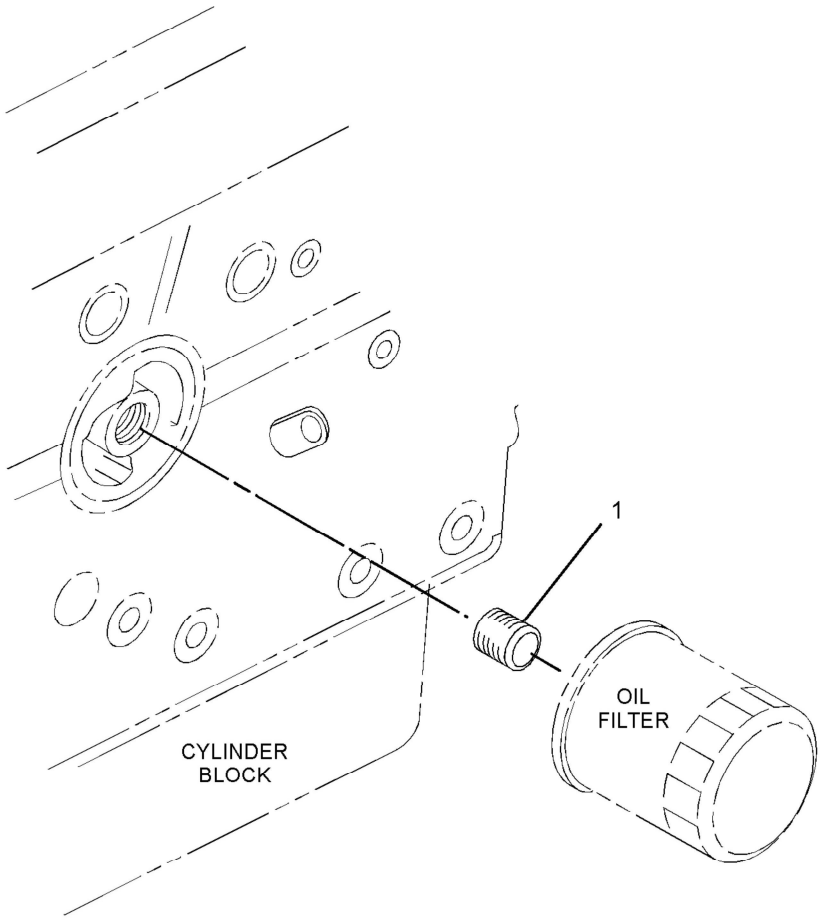

GRAPHIC #1 **<END>** g01355707

LUBRICATION SYSTEM

308-2287 PUMP GP-ENGINE OIL

SMCS-1304, 1315 **i03202204**

NOTE	REF NO	GRAPHIC REF	PART NUMBER	QTY	PART NAME 1 2 3 4 5 6 (PRODUCT LEVEL)	SEE PAGE
	1	1	**153-5936**	2	WASHER	
	2	1	**153-6849**	1	SPRING	
	3	1	**153-6850**	1	COLLAR	
	4	1	**153-6851**	1	CLIP	
	5	1	**153-6853**	1	SEAL-O-RING	
	6	1	**153-6881**	1	BOLT	
	7	1	**154-1942**	1	VALVE-RELIEF (ENGINE OIL PRESSURE)	
	8	1	**154-2353**	1	TUBE AS-OIL	
B	9	1	**160-4150**	1	SHIM (0.1-MM THK)	
B		1	**160-4151**	1	SHIM (0.15-MM THK)	
B		1	**160-4152**	1	SHIM (0.2-MM THK)	
B		1	**160-4153**	1	SHIM (0.5-MM THK)	
	10	1	**318-8382**	1	GEAR GP	
	10A	1	**154-1677**	3	BUSHING	
	10B	1	**154-1678**	3	DOWEL	
	10C	1	**308-1984**	1	SPRING	
	11	1	**308-1867**	1	WASHER-THRUST	
	12	1	**308-1869**	1	COVER	

B-USE AS REQUIRED

308-2287 **PUMP GP-ENGINE OIL** *(contd.)* **i03202204**

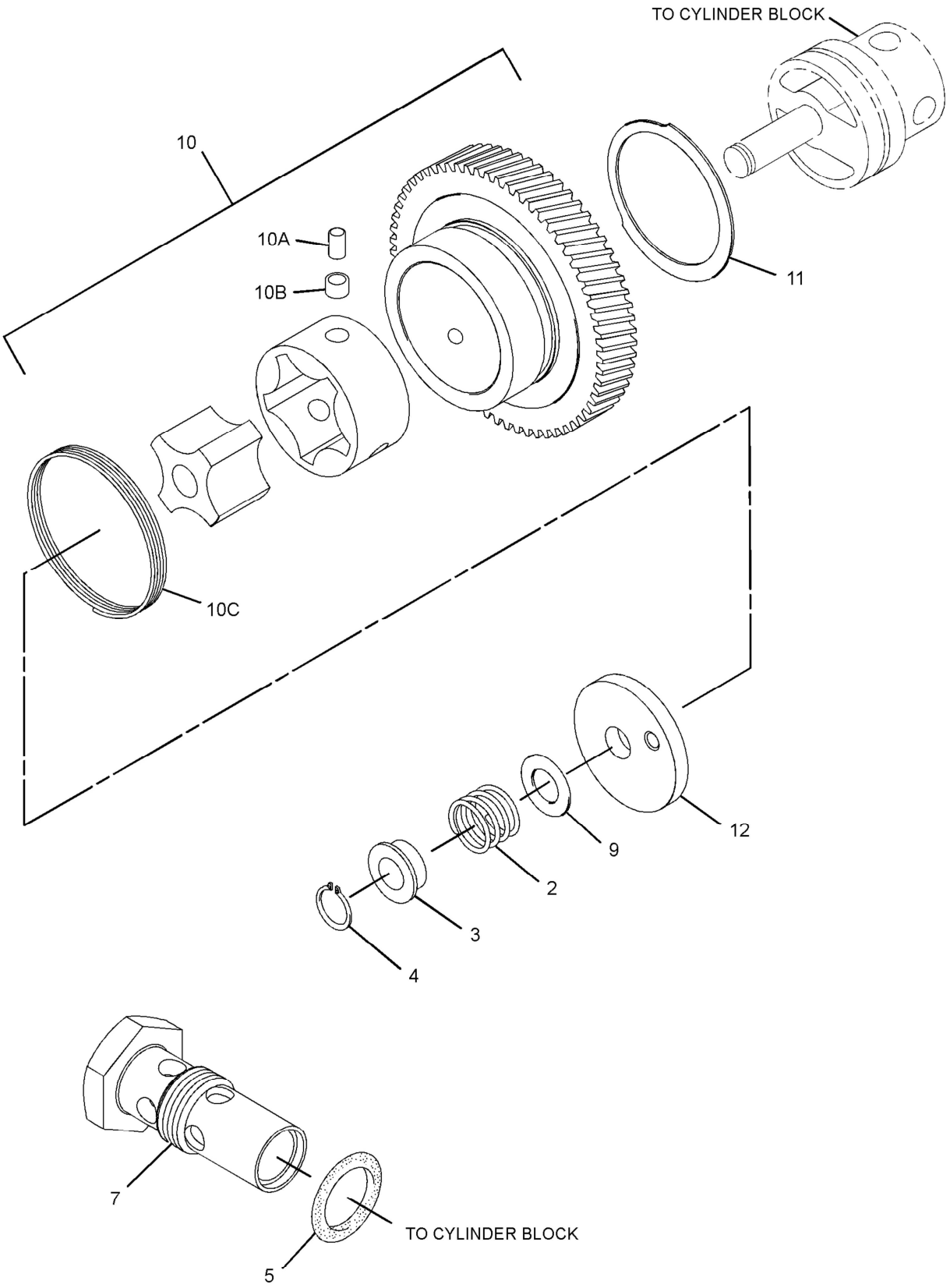

GRAPHIC #1 g01410345

308-2287 **PUMP GP-ENGINE OIL** *(contd.)* **i03202204**

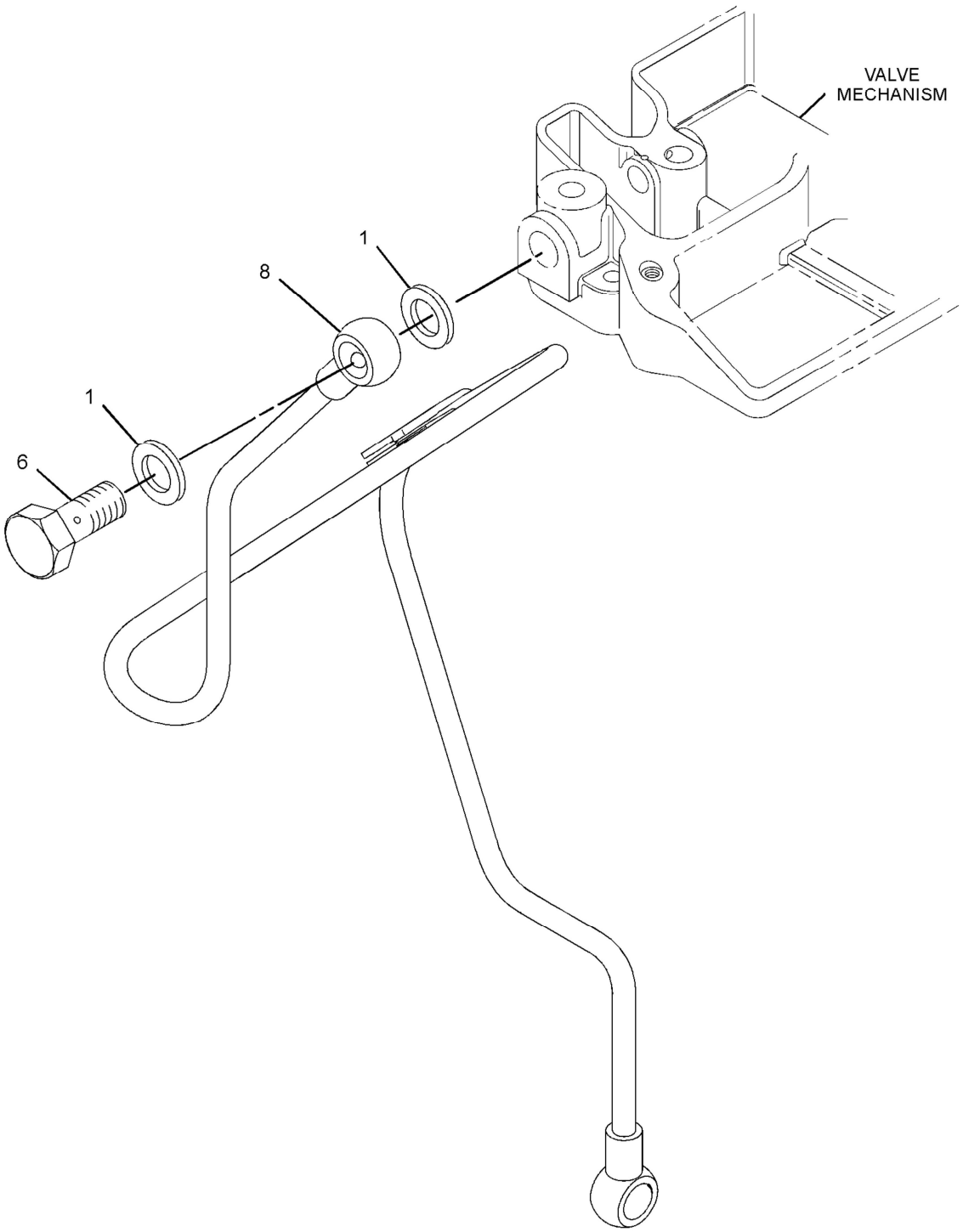

GRAPHIC #2 **<END>** g01410346

LUBRICATION SYSTEM

309-6717 PUMP GP-ENGINE OIL

SMCS-1304, 1315 **i03120909**

NOTE	REF NO	GRAPHIC REF	PART NUMBER	QTY	PART NAME 1 2 3 4 5 6 (PRODUCT LEVEL)	SEE PAGE
	1	2	**153-5936**	2	WASHER	
	2	1	**153-6849**	1	SPRING	
	3	1	**153-6850**	1	COLLAR	
	4	1	**153-6851**	1	CLIP	
	5	1	**153-6853**	1	SEAL-O-RING	
	6	2	**153-6881**	1	BOLT	
	7	1	**154-1942**	1	VALVE-RELIEF (ENGINE OIL PRESSURE)	
	8	2	**154-2353**	1	TUBE AS-OIL	
B	9	1	**160-4150**	1	SHIM (0.1-MM THK)	
B			**160-4151**	1	SHIM (0.15-MM THK)	
B			**160-4152**	1	SHIM (0.2-MM THK)	
B			**160-4153**	1	SHIM (0.5-MM THK)	
	10	1	**318-8382**	1	GEAR GP (62-TEETH)	
	10A	1	**154-1677**	1	BUSHING	
	10B	1	**154-1678**	1	DOWEL	
	10C	1	**308-1984**	1	SPRING	
	11	1	**308-1867**	1	WASHER-THRUST	
	12	1	**308-1869**	1	COVER	

B-USE AS REQUIRED

309-6717 **PUMP GP-ENGINE OIL** ***(contd.)*** **i03120909**

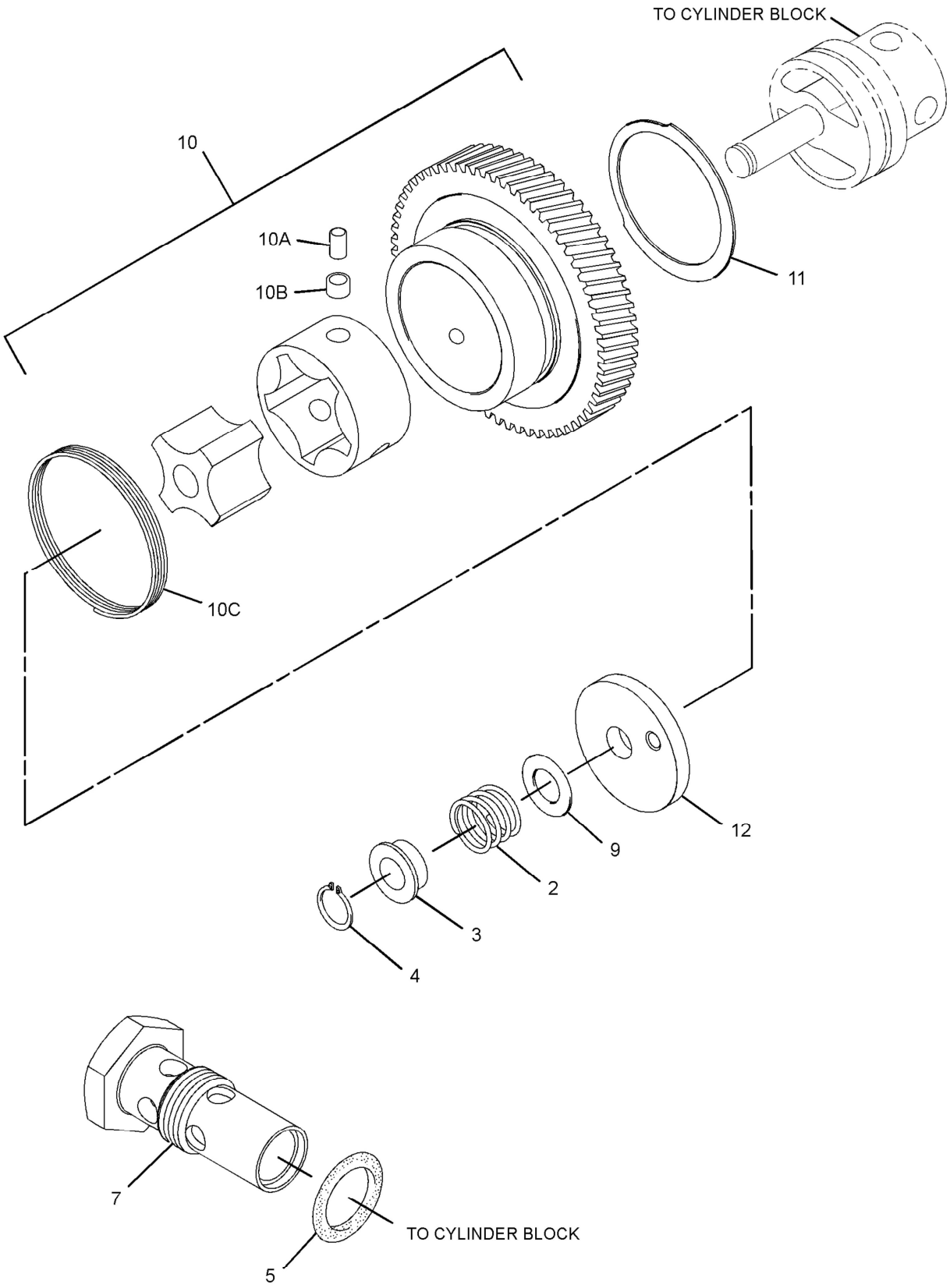

GRAPHIC #1 g01410345

309-6717 **PUMP GP-ENGINE OIL** *(contd.)* **i03120909**

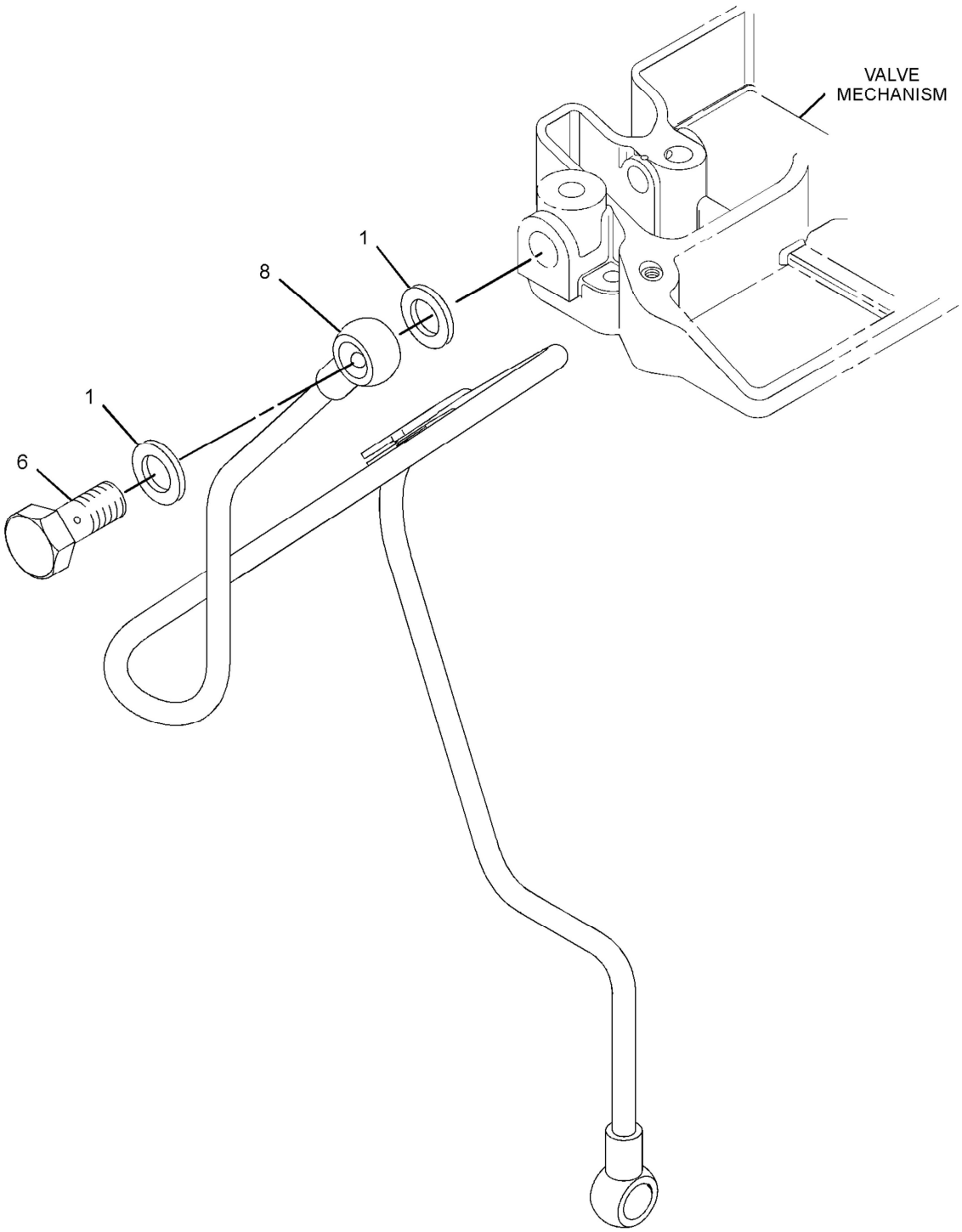

GRAPHIC #2 **<END>** g01410346

308-2302 CONNECTION GP-WATER

SMCS-1380 **i02743426**

NOTE	REF NO	GRAPHIC REF	PART NUMBER	QTY	PART NAME 1 2 3 4 5 6 (PRODUCT LEVEL)	SEE PAGE
	1	1	**154-1828**	1	GASKET-COVER (WATER TEMPERATURE REGULATOR)	
	2	1	**168-9001**	2	BOLT	
	3	1	**297-2996**	1	COVER-HOUSING	

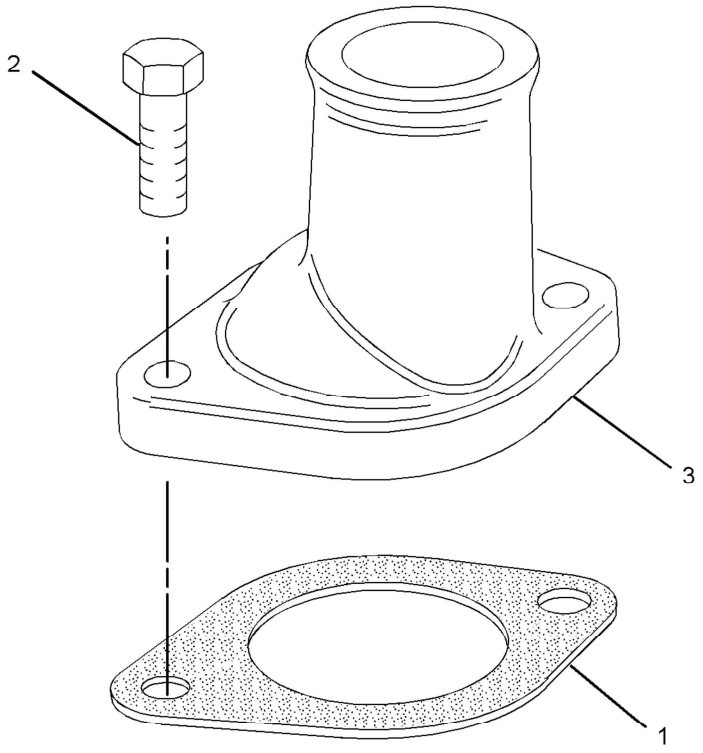

GRAPHIC #1 **<END>** g01419372

317-7194 CONNECTOR GP-CAB HEATER LINES

SMCS-1380 **i02853759**

NOTE	REF NO	GRAPHIC REF	PART NUMBER	QTY	PART NAME 1 2 3 4 5 6 (PRODUCT LEVEL)	SEE PAGE
	1	1	**205-1133**	2	CONNECTOR	

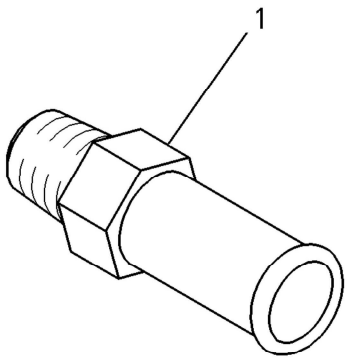

GRAPHIC #1 **<END>** g00785852

322-2427 CONNECTOR GP-CAB HEATER LINES

SMCS-1380 **i02905442**

NOTE	REF NO	GRAPHIC REF	PART NUMBER	QTY	PART NAME 1 2 3 4 5 6 (PRODUCT LEVEL)	SEE PAGE
	1	1	**205-1133**	1	CONNECTOR	

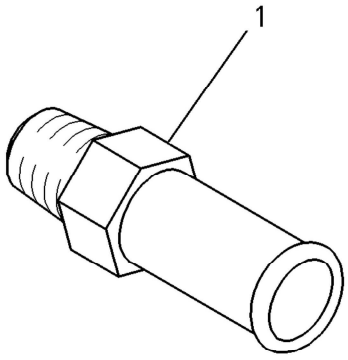

GRAPHIC #1 **<END>** g00785852

COOLING SYSTEM

319-1623 FAN GP-BLOWER

SMCS-1356, 1360 **i02980189**

NOTE	REF NO	GRAPHIC REF	PART NUMBER	QTY	PART NAME 1 2 3 4 5 6 (PRODUCT LEVEL)	SEE PAGE
	1	1	**183-3552**	1	FAN-BLOWER	

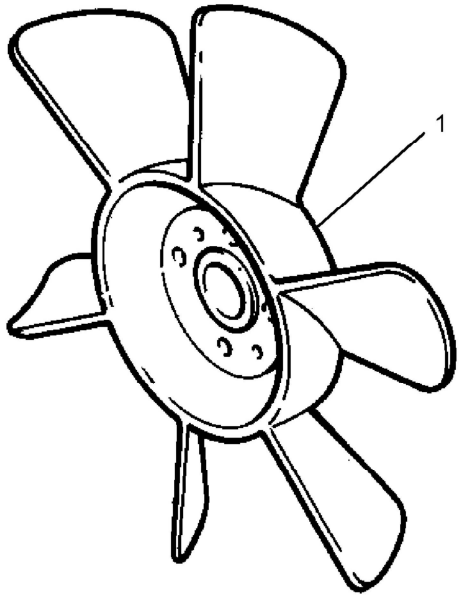

GRAPHIC #1 **<END>** g01640094

COOLING SYSTEM

308-2303 FAN GP-SUCTION

SMCS-1356 **i02752270**

NOTE	REF NO	GRAPHIC REF	PART NUMBER	QTY	PART NAME 1 2 3 4 5 6 (PRODUCT LEVEL)	SEE PAGE
	1	1	**165-2141**	4	BOLT	
	2	1	**183-3551**	1	FAN-SUCTION	

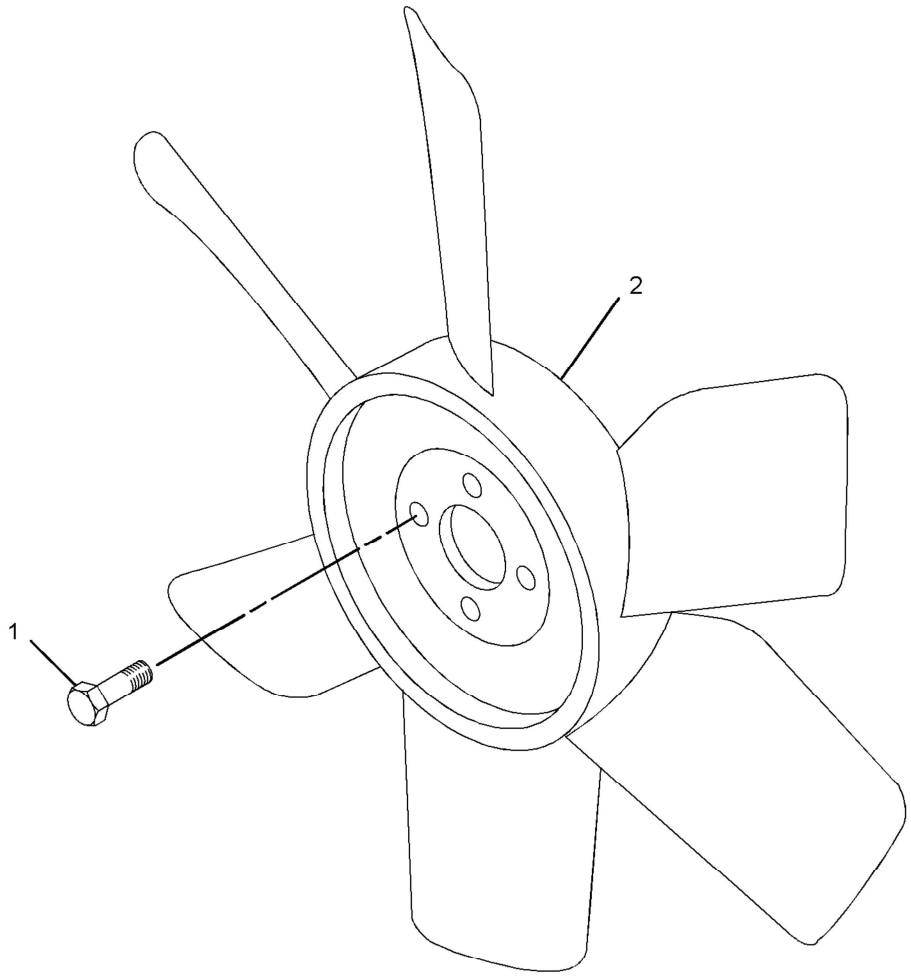

GRAPHIC #1 **<END>** g01415664

317-0980 HOUSING GP-WATER REGULATOR

SMCS-1393 **i02826830**

NOTE	REF NO	GRAPHIC REF	PART NUMBER	QTY	PART NAME 1 2 3 4 5 6 (PRODUCT LEVEL)	SEE PAGE
	1	1	**154-1828**	1	GASKET-COVER (TEMPERATURE REGULATOR)	
	2	1	**168-9001**	2	BOLT	
	3	1	**217-7379**	1	HOUSING	

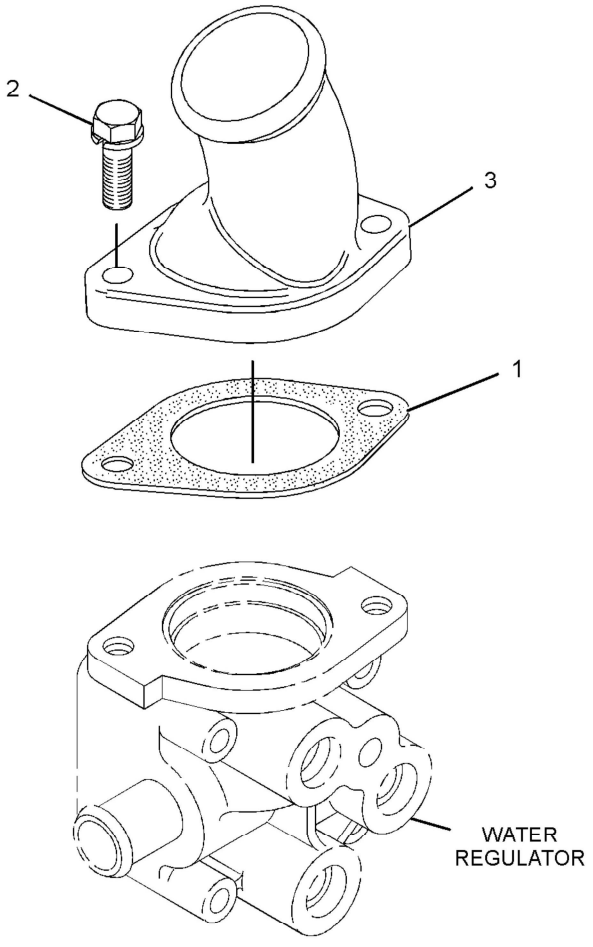

GRAPHIC #1 **<END>** g01439312

317-7191 HOUSING GP-WATER REGULATOR

SMCS-1393 **i03195581**

NOTE	REF NO	GRAPHIC REF	PART NUMBER	QTY	PART NAME 1 2 3 4 5 6 (PRODUCT LEVEL)	SEE PAGE
	1	1	**154-1828**	1	GASKET-COVER (WATER TEMPERATURE REGULATOR)	
	2	1	**168-9001**	2	BOLT	
	3	1	**246-9218**	1	COVER-HOUSING	

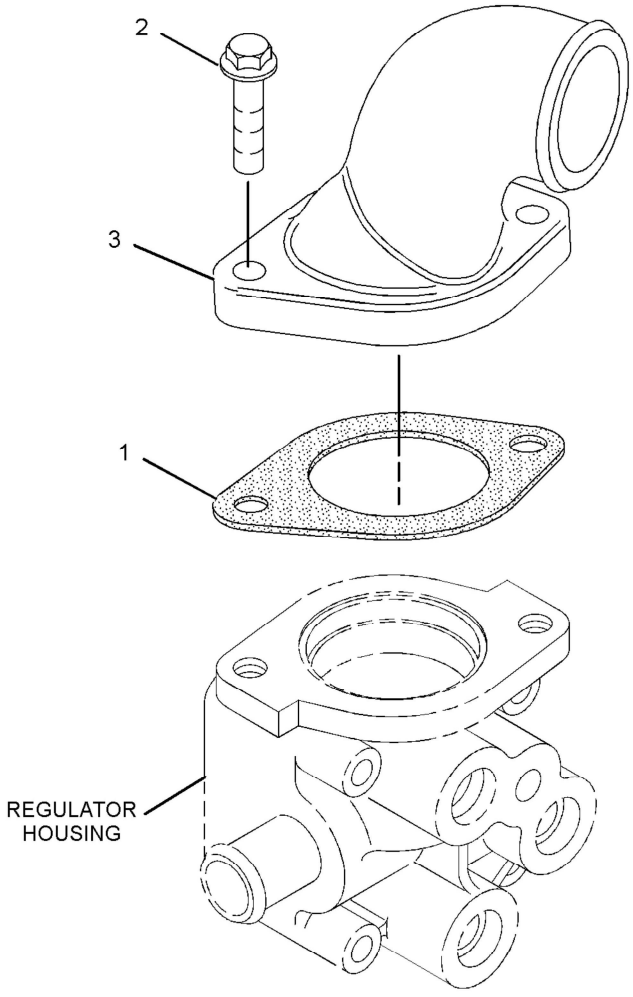

GRAPHIC #1

<END>

g01635136

COOLING SYSTEM

315-7813 MOUNTING GP-FAN

SMCS-1356 **i02810575**

NOTE	REF NO	GRAPHIC REF	PART NUMBER	QTY	PART NAME 1 2 3 4 5 6 (PRODUCT LEVEL)	SEE PAGE
	1	1	**153-7640**	4	BOLT	
	2	1	**154-2433**	1	PLATE	

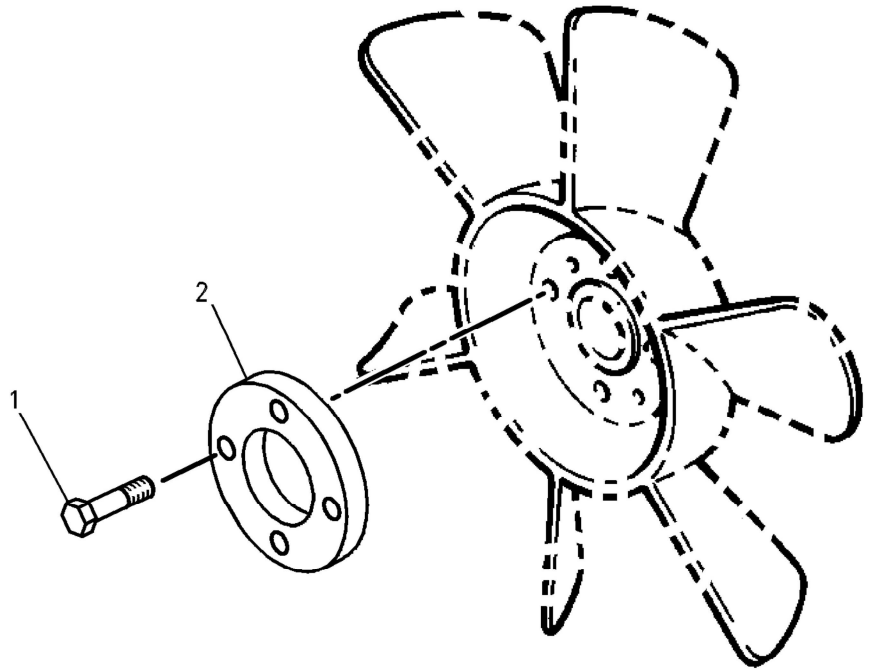

GRAPHIC #1 **<END>** g00485543

COOLING SYSTEM

308-2301 PUMP GP-WATER

SMCS-1361 **i03186408**

NOTE	REF NO	GRAPHIC REF	PART NUMBER	QTY	PART NAME 1 2 3 4 5 6 (PRODUCT LEVEL)	SEE PAGE
	1	1	**308-1907**	2	BOLT	
	2	1	**153-5960**	3	NUT	
	3	1	**153-5961**	4	BOLT	
	4	1	**154-1817**	1	PLUG	
	5	1	**154-1831**	1	PLUG	
	6	1	**308-1908**	1	GASKET-WATER PUMP	
	7	1	**5D-1026**	2	CLAMP-HOSE	
	8	1	**215-2617**	1	GASKET (HOUSING)	
	9	1	**238-9137**	1	CONNECTION	
	10	2	**238-9143**	1	CONNECTION	
	11	2	**245-1361**	1	COOLER AS-OIL (ENGINE)	
	11A	2	**245-1362**	1	CONNECTOR	
	11B	2	**245-1364**	1	SEAL	
	12	1	**249-5541**	1	REGULATOR-WATER TEMPERATURE	
	13	1	**286-7495**	1	HOUSING-THERMOSTAT	
	14	1	**286-7496**	1	HOSE-WATER	
	15	1	**311-0023**	1	PUMP-WATER	

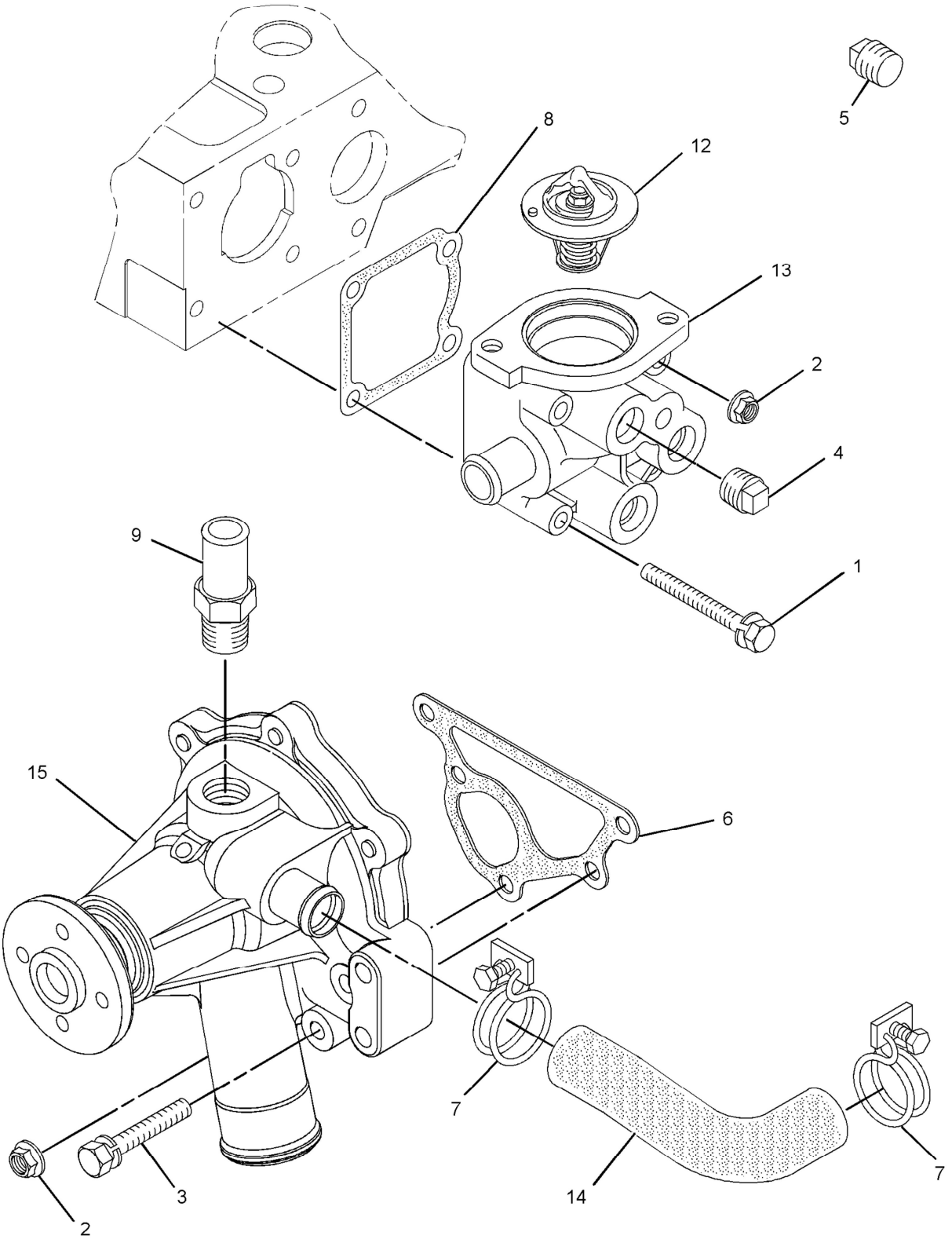

GRAPHIC #1 g01626853

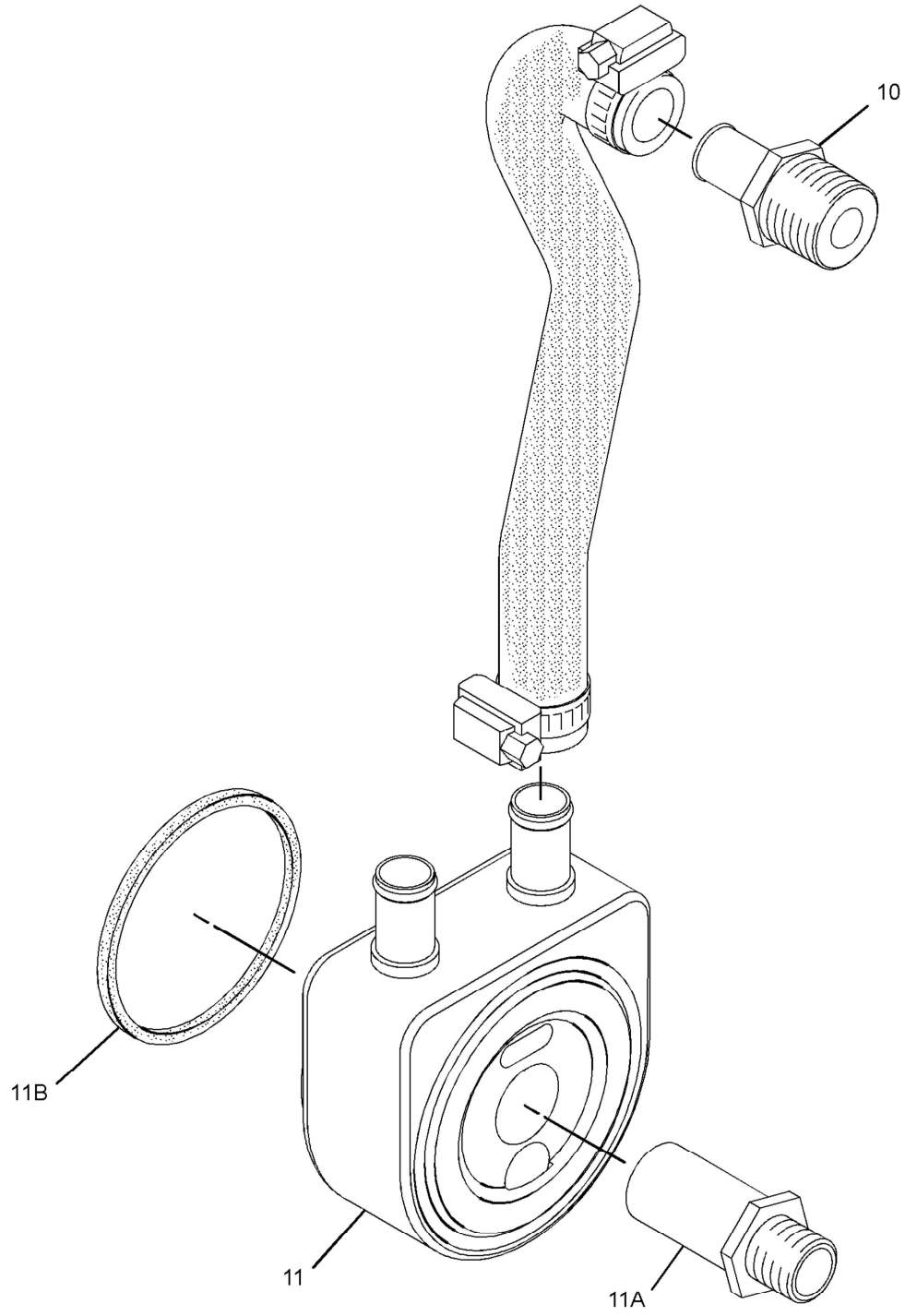

GRAPHIC #2 **<END>** g01626854

COOLING SYSTEM

309-6721 PUMP GP-WATER

SMCS-1361 **i02946980**

NOTE	REF NO	GRAPHIC REF	PART NUMBER	QTY	PART NAME 1 2 3 4 5 6 (PRODUCT LEVEL)	SEE PAGE
	1	1	**153-5960**	3	NUT	
	2	1	**153-5961**	4	BOLT	
	3	1	**154-1817**	1	PLUG	
	4	1	**154-1831**	1	PLUG	
	5	1	**215-2617**	1	GASKET (HOUSING)	
	6	1	**249-5541**	1	REGULATOR-WATER TEMPERATURE	
	7	1	**286-7495**	1	HOUSING-THERMOSTAT	
	8	1	**286-7496**	1	HOSE-WATER	
	9	1	**311-0023**	1	PUMP-WATER	
	10	1	**303-0307**	1	GASKET (WATER PUMP)	
	11	1	**308-1907**	2	BOLT	
	12	1	**5D-1026**	2	CLAMP-HOSE	

309-6721 **PUMP GP-WATER** *(contd.)* **i02946980**

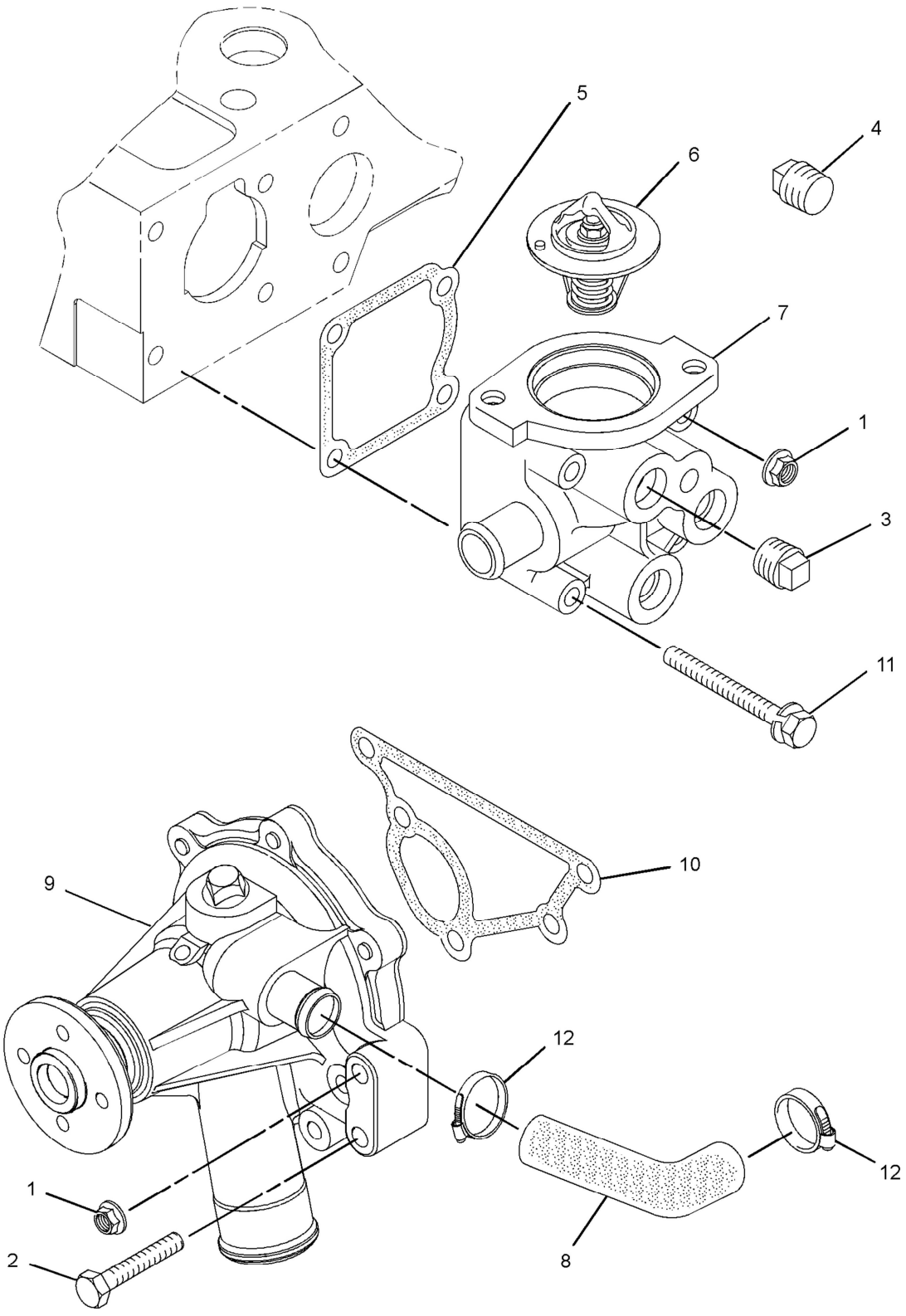

GRAPHIC #1 **<END>** g01397808

COOLING SYSTEM

317-0979 PUMP GP-WATER

SMCS-1361 **i02826936**

NOTE	REF NO	GRAPHIC REF	PART NUMBER	QTY	PART NAME 1 2 3 4 5 6 (PRODUCT LEVEL)	SEE PAGE
	1	1	**5D-1026**	2	CLAMP-HOSE	
	2	2	**127-8281**	1	CLIP	
	3	1	**153-5960**	3	NUT	
	4	1	**153-5961**	4	BOLT	
	5	1	**154-1817**	1	PLUG	
	6	1	**154-1831**	1	PLUG	
	7	2	**155-7984**	1	WASHER	
	8	2	**180-6118**	1	BOLT	
	9	1	**215-2617**	1	GASKET	
	10	1	**238-9137**	1	CONNECTION	
	11	2	**238-9143**	1	CONNECTION	
	12	2	**245-1361**	1	COOLER AS-OIL (ENGINE)	
	12A	2	**245-1362**	1	CONNECTOR	
	12B	2	**245-1364**	1	SEAL	
	13	1	**249-5541**	1	REGULATOR-WATER TEMPERATURE	
	14	1	**286-7495**	1	HOUSING-THERMOSTAT	
	15	1	**286-7496**	1	HOSE-WATER	
	16	1	**308-1907**	2	BOLT	
	17	1	**308-1908**	1	GASKET-WATER PUMP	
	18	1	**311-0023**	1	PUMP-WATER	

317-0979 **PUMP GP-WATER** *(contd.)* **i02826936**

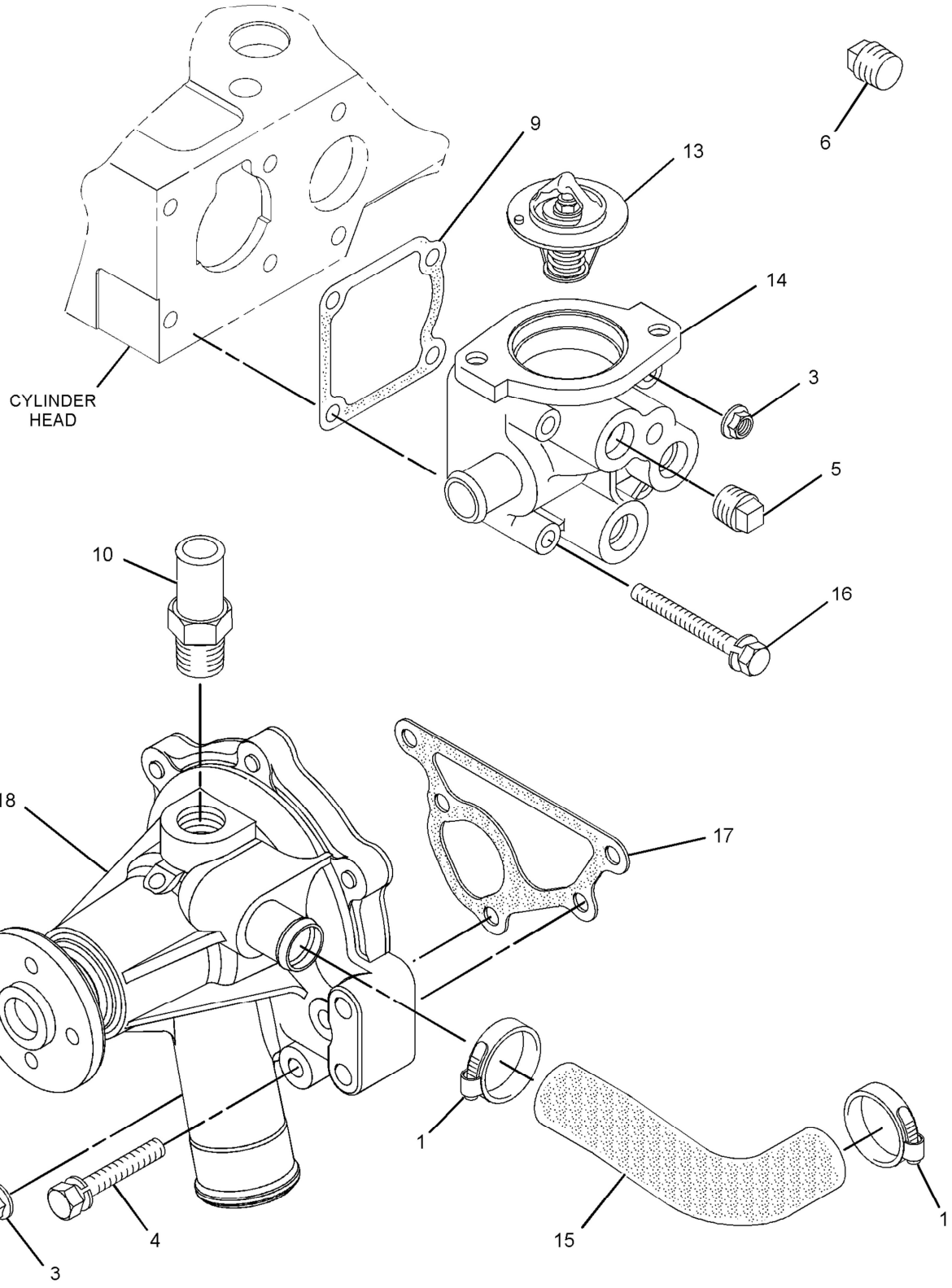

GRAPHIC #1 g01439166

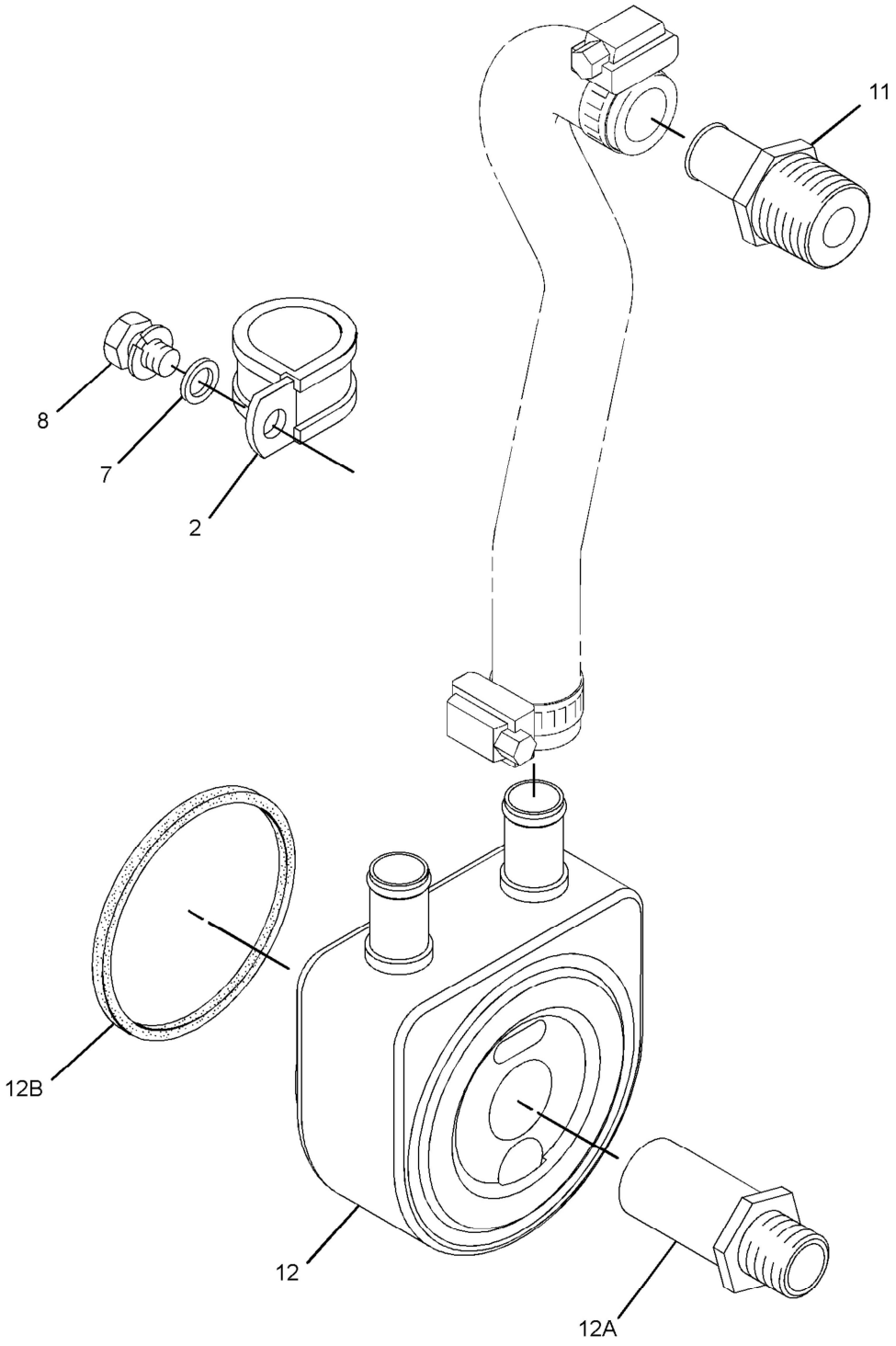

GRAPHIC #2 **<END>** g01439167

AIR INLET AND EXHAUST SYSTEM

308-2309 CONNECTION GP-EXHAUST

SMCS-1061 **i02752289**

NOTE	REF NO	GRAPHIC REF	PART NUMBER	QTY	PART NAME 1 2 3 4 5 6 (PRODUCT LEVEL)	SEE PAGE
	1	1	**153-7920**	2	GASKET	
	2	1	**168-9001**	8	BOLT	
	3	1	**197-8429**	2	FLANGE	

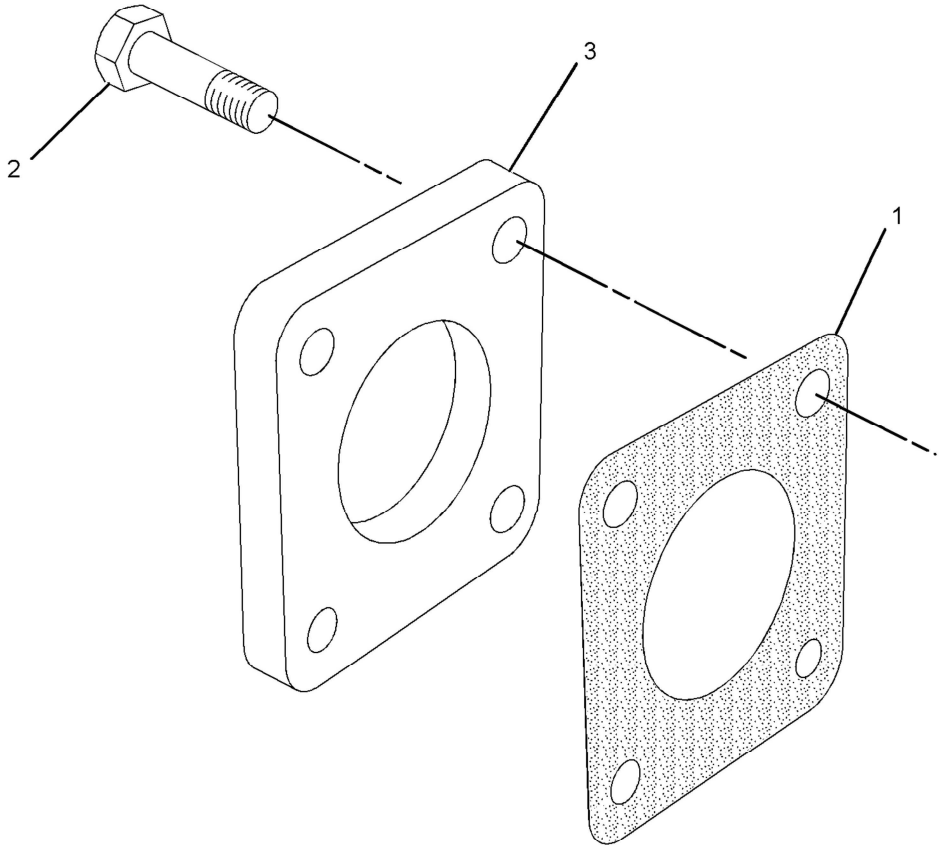

GRAPHIC #1 **<END>** g01388832

AIR INLET AND EXHAUST SYSTEM

308-5610 CONNECTION GP-EXHAUST

SMCS-1061 **i02856018**

NOTE	REF NO	GRAPHIC REF	PART NUMBER	QTY	PART NAME 1 2 3 4 5 6 (PRODUCT LEVEL)	SEE PAGE
	1	1	**153-7920**	1	GASKET	
	2	1	**168-9001**	1	BOLT	
	3	1	**197-8429**	1	FLANGE	
	4	1	**252-8372**	1	ELBOW AS-EXHAUST	
	4A	1	**153-7920**	1	GASKET	
	4B	1	**163-5372**	4	WASHER (8X15.4X4-MM THK)	
	4C	1	**191-0563**	1	ELBOW-EXHAUST	
	4D	1	**293-9223**	4	BOLT	

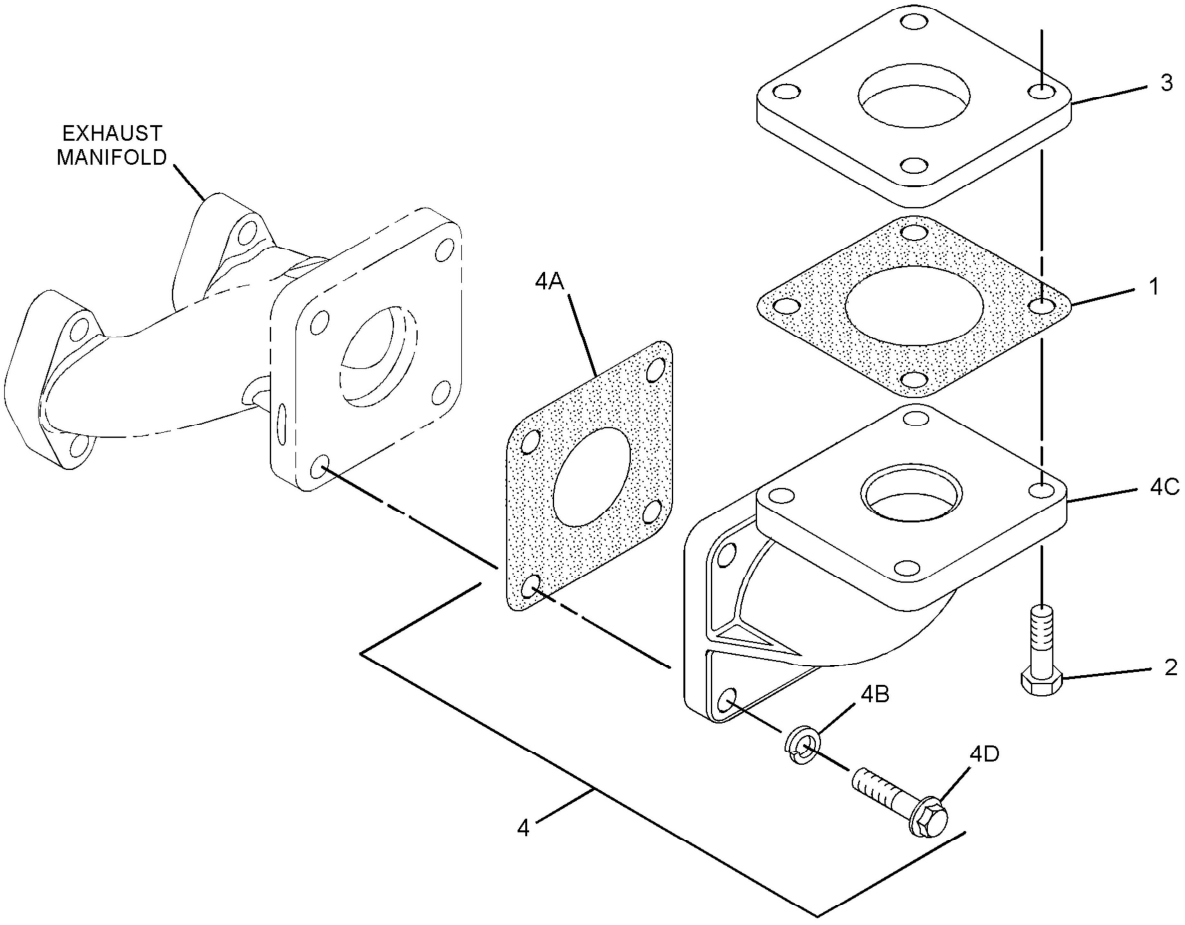

GRAPHIC #1 **<END>** g01358328

AIR INLET AND EXHAUST SYSTEM

309-6724 MANIFOLD GP-EXHAUST

SMCS-1059 **i02770506**

NOTE	REF NO	GRAPHIC REF	PART NUMBER	QTY	PART NAME 1 2 3 4 5 6 (PRODUCT LEVEL)	SEE PAGE
	1	1	**153-5592**	2	NUT	
	2	1	**154-2426**	1	MANIFOLD-EXHAUST	
	3	1	**154-2427**	1	GASKET-EXHAUST	
	4	1	**154-2428**	6	BOLT	

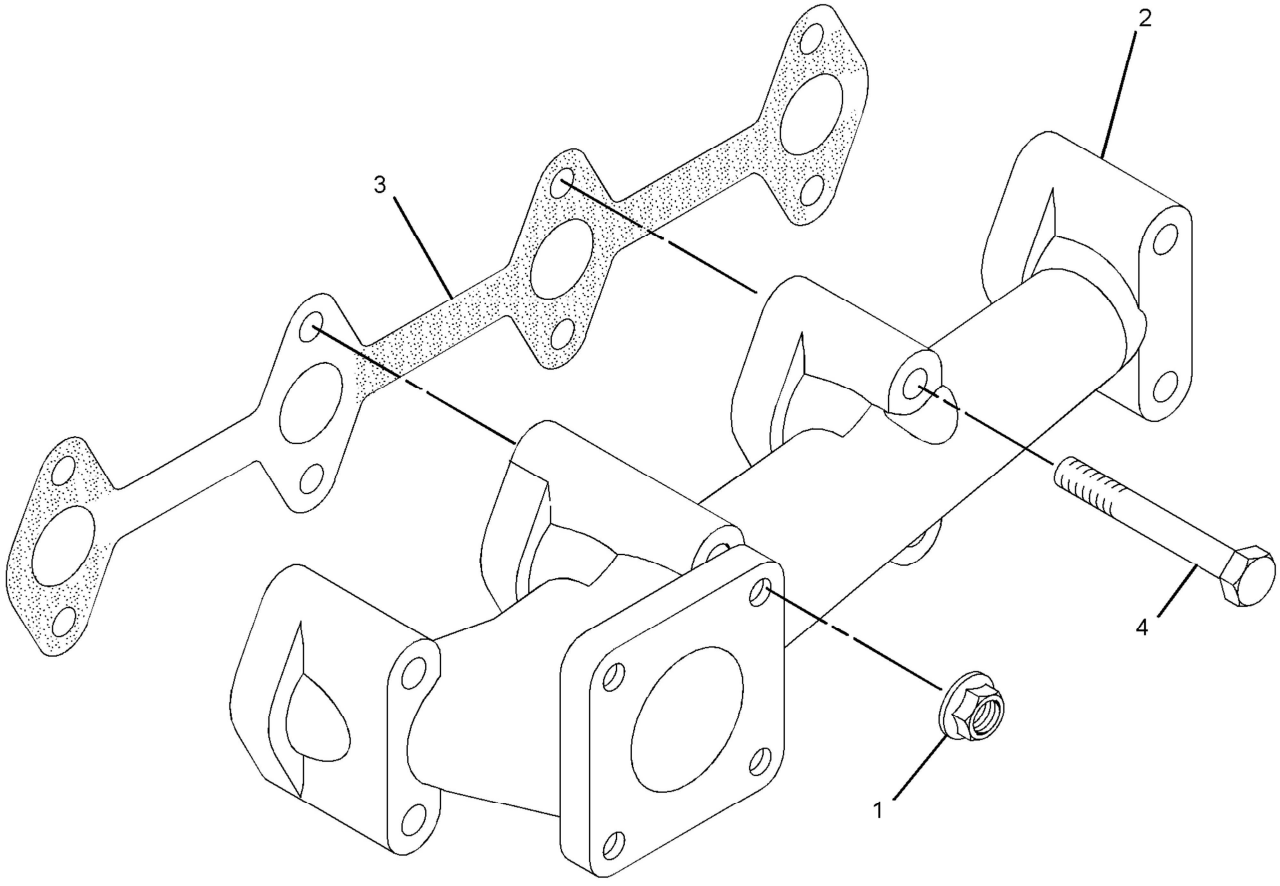

GRAPHIC #1 **<END>** g01419140

AIR INLET AND EXHAUST SYSTEM

315-5256 MANIFOLD GP-EXHAUST

SMCS-1059 **i02810579**

NOTE	REF NO	GRAPHIC REF	PART NUMBER	QTY	PART NAME 1 2 3 4 5 6 (PRODUCT LEVEL)	SEE PAGE
	1	1	**153-7920**	1	GASKET	

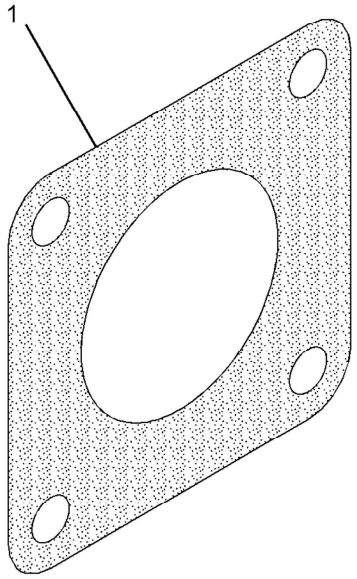

GRAPHIC #1 **<END>** g01413953

AIR INLET AND EXHAUST SYSTEM

317-7192 MANIFOLD GP-EXHAUST

SMCS-1059 **i02853767**

NOTE	REF NO	GRAPHIC REF	PART NUMBER	QTY	PART NAME 1 2 3 4 5 6 (PRODUCT LEVEL)	SEE PAGE
	1	1	**153-5592**	2	NUT	
	2	1	**154-2427**	1	GASKET-EXHAUST	
	3	1	**154-2428**	4	BOLT	
	4	1	**163-5371**	2	BOLT	
	5	1	**163-5372**	2	WASHER (8X15.4X4-MM THK)	
	6	1	**205-7709**	1	MANIFOLD-EXHAUST	

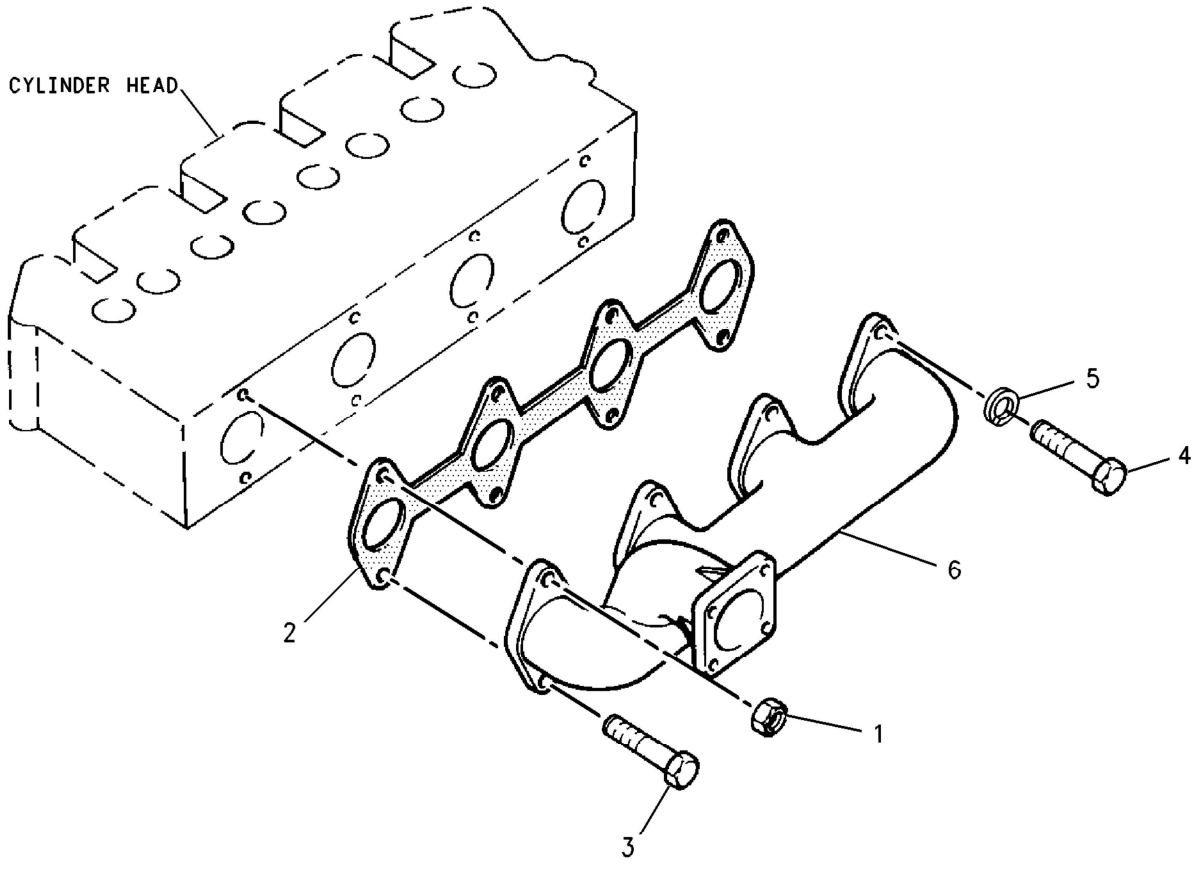

GRAPHIC #1 **<END>** g00812497

AIR INLET AND EXHAUST SYSTEM

317-7193 MUFFLER GP

SMCS-1062 **i02853768**

NOTE	REF NO	GRAPHIC REF	PART NUMBER	QTY	PART NAME 1 2 3 4 5 6 (PRODUCT LEVEL)	SEE PAGE
	1	1	**168-9001**	4	BOLT	
	2	1	**226-4918**	1	MUFFLER AS	
		1	**226-4922**	1	MUFFLER	
M	2A	1	**5P-7970**	1	NUT (M8X1.25-THD)	
M	2B	1	**6V-5221**	1	BOLT (M8X1.25X80-MM)	
	2C	1	**155-7984**	1	WASHER	
	2D	1	**226-4919**	1	PIPE-EXHAUST	
	2E	1	**226-4923**	1	CLAMP	

M-METRIC PART

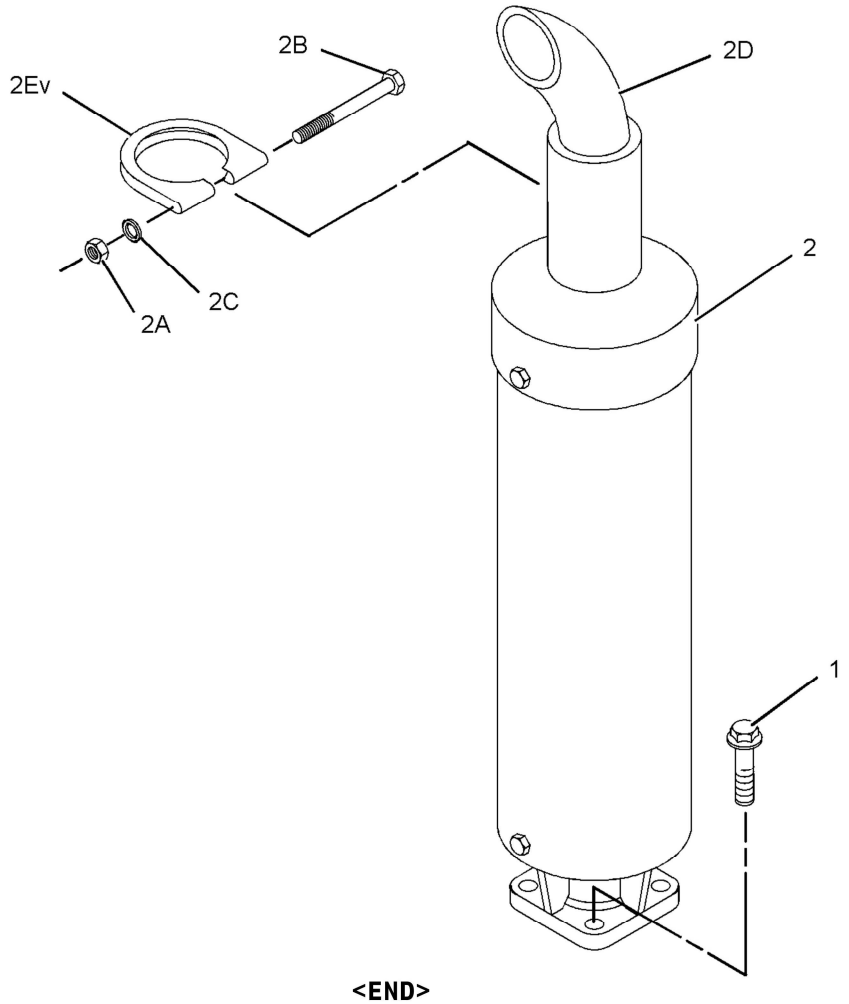

GRAPHIC #1 **<END>** g01038464

AIR INLET AND EXHAUST SYSTEM

308-2308 TURBOCHARGER GP

SMCS-1052, 1053 **i02888440**

NOTE	REF NO	GRAPHIC REF	PART NUMBER	QTY	PART NAME 1 2 3 4 5 6 (PRODUCT LEVEL)	SEE PAGE
	1	2	**064-3058**	2	CLAMP-HOSE	
	2	2	**153-5592**	8	NUT	
	3	3	**153-5939**	1	GAUZE (CRANKCASE BREATHER)	
	4	3	**153-5962**	3	BOLT	
	5	1	**153-6375**	1	BOLT	
	6	1	**153-6853**	1	SEAL-O-RING	
	7	2	**153-7640**	2	BOLT	
	8	3	**154-1347**	4	NUT	
	9	2	**154-2427**	1	GASKET-EXHAUST	
	10	2	**154-2428**	4	BOLT	
	11	2	**155-7984**	4	WASHER	
	12	1	**155-8009**	4	BOLT	
	13	1	**163-5372**	5	WASHER (8X15.4X4-MM THK)	
	14	3	**165-2140**	2	BOLT	
	15	1	**165-2141**	1	BOLT	
	16	1	**168-9001**	4	BOLT	
	17	3	**183-1165**	1	PLUG	
	18	3	**190-3762**	4	WASHER	
	19	3	**217-5859**	1	VALVE-BREATHER (CRANKCASE)	
	20	3	**217-5861**	1	PLATE-RETAINING	
	21	3	**217-5862**	6	BOLT	
	22	2	**217-5864**	1	GASKET	
	23	1	**225-8533**	2	GASKET	
	24	3	**233-0695**	1	SEAL-VALVE COVER	
	25	2	**236-9987**	1	MANIFOLD-EXHAUST	
	26	3	**238-8731**	1	ADAPTER-BREATHER	
	27	2	**238-9196**	1	GASKET-TURBOCHARGER	
	28	1	**238-9198**	1	ELBOW-EXHAUST	
	29	1	**238-9200**	5	BOLT (M8X1.25X25-MM)	
	30	3	**238-9289**	1	COVER-VALVE	
	31	3	**238-9295**	4	BOLT	
	32	2	**238-9349**	1	TURBOCHARGER GP	
	33	1	**317-0962**	1	TUBE-TURBOCHARGER OIL	
	34	1	**239-0187**	1	BRACKET	
	35	1	**239-0228**	1	TUBE AS	
	35A	1	**225-8526**	2	WASHER (10.4X13.75X1.37-MM THK)	
	35B	1	**239-0169**	1	BOLT-SPECIAL (BANJO)	
	35C	1	**239-0227**	2	CLIP	
	36	1	**239-0229**	1	SPACER	
	37	2	**239-0232**	4	STUD (M8X1.25X31-MM)	
	38	2	**249-1486**	1	CONNECTION-AIR	
	39	2	**249-1532**	1	HOSE-AIR INLET	
	40	3	**262-3975**	1	GASKET	
	41	1	**304-5061**	1	GASKET (ELBOW)	

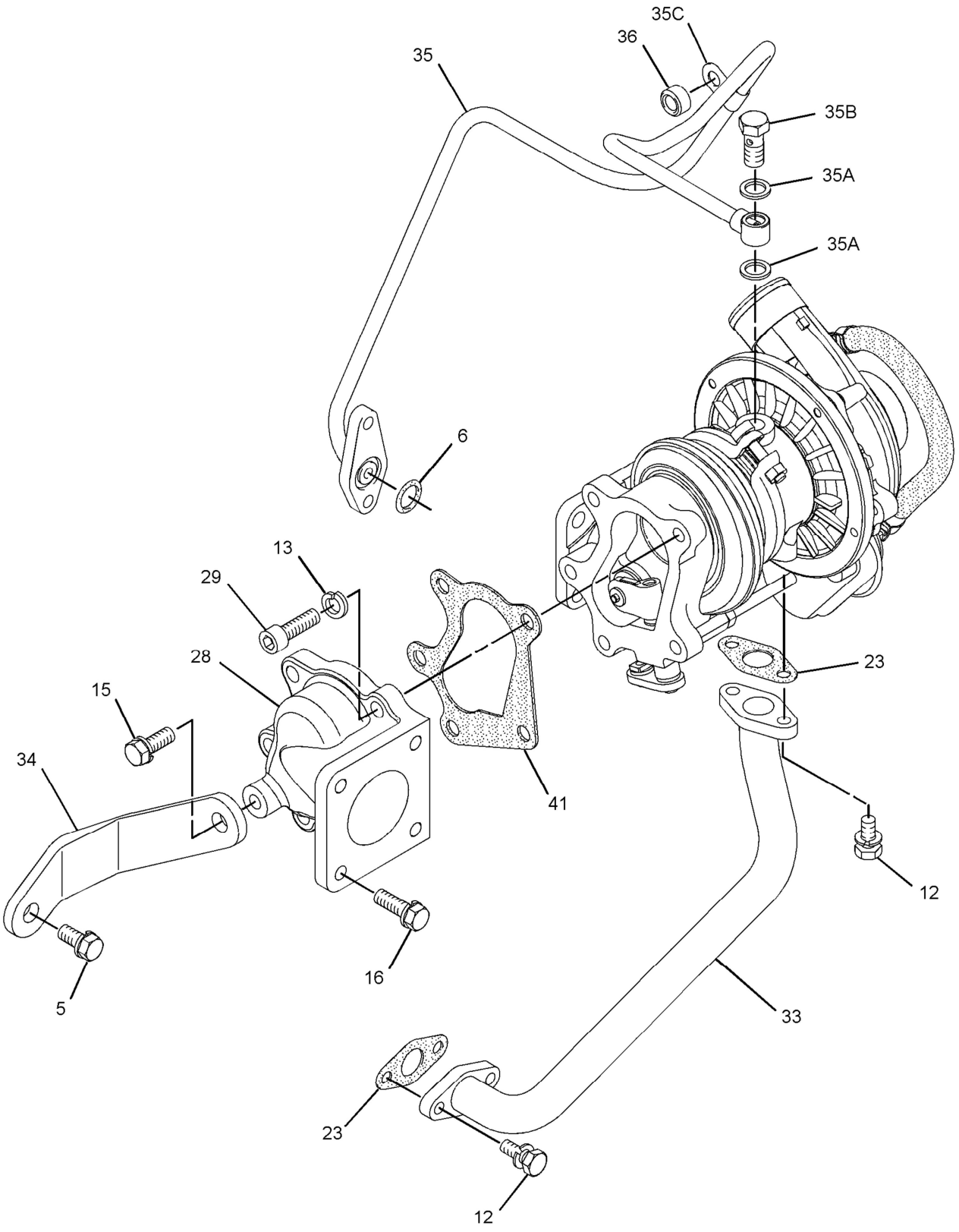

GRAPHIC #1 g01416895

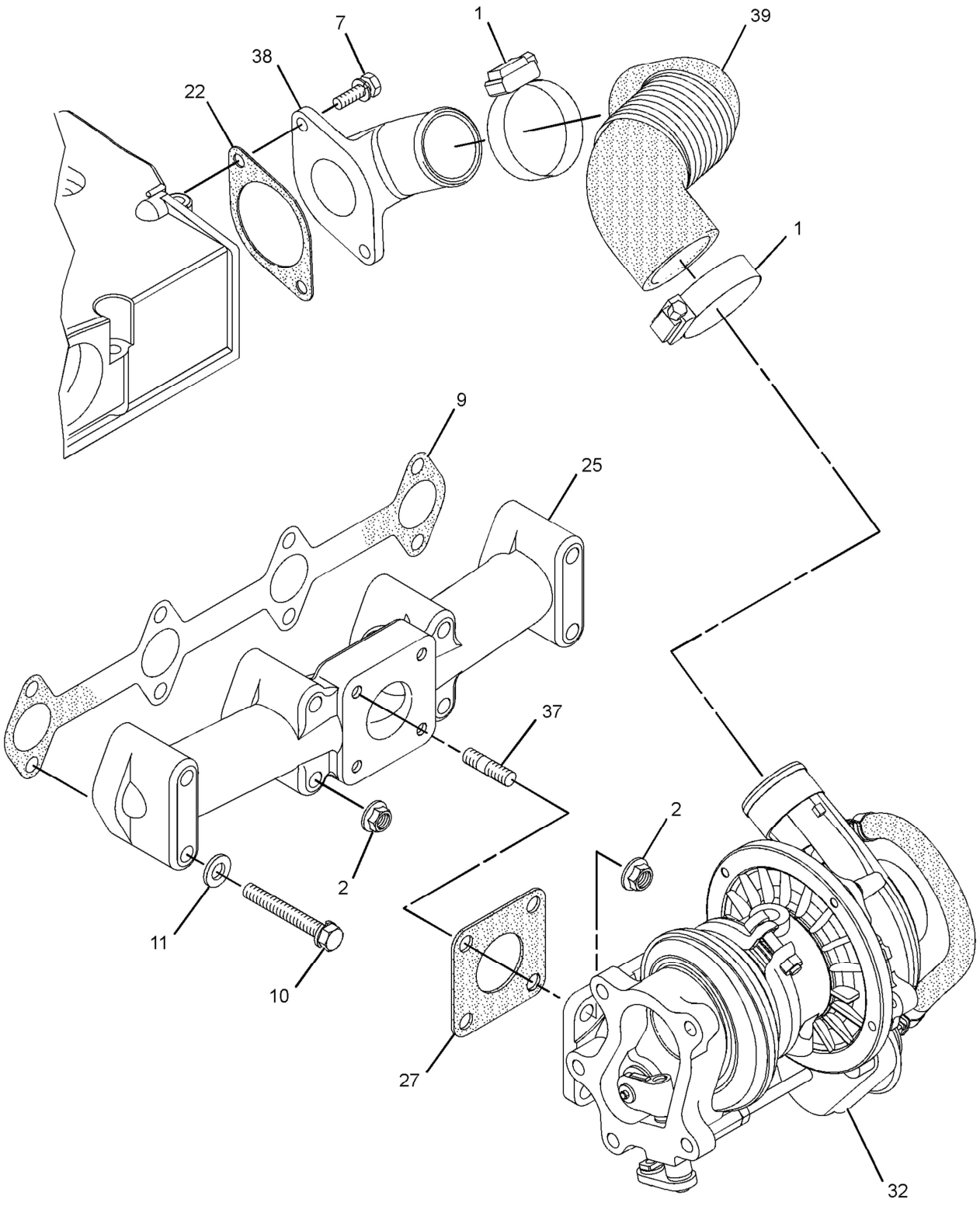

GRAPHIC #2 g01416896

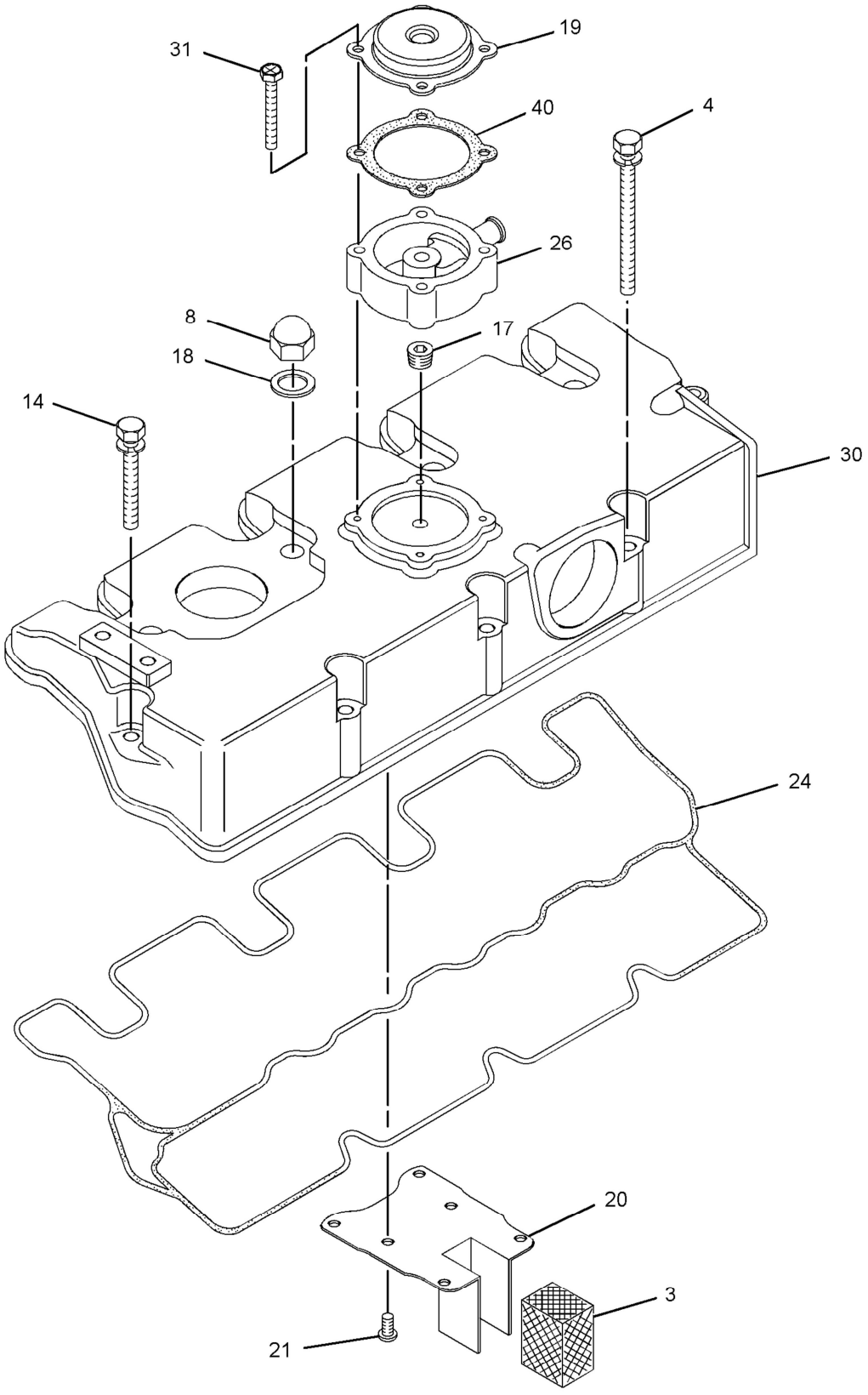

GRAPHIC #3 **<END>** g01416898

AIR INLET AND EXHAUST SYSTEM

326-8542 TURBOCHARGER GP

SMCS-1052, 1053 **i03115945**

NOTE	REF NO	GRAPHIC REF	PART NUMBER	QTY	PART NAME 1 2 3 4 5 6 (PRODUCT LEVEL)	SEE PAGE
	1	3	**064-3058**	2	CLAMP-HOSE	
	2	1	**153-5592**	8	NUT	
	3	2	**153-5939**	1	GAUZE (CRANKCASE BREATHER)	
	4	2	**153-5962**	3	BOLT	
	5	1	**153-6375**	1	BOLT	
	6	1	**153-6853**	1	SEAL-O-RING	
	7	3	**153-7640**	2	BOLT	
	8	2	**154-1347**	4	NUT	
	9	1	**154-2427**	1	GASKET-EXHAUST	
	10	1	**154-2428**	4	BOLT	
	11	1	**163-5372**	5	WASHER (8X15.4X4-MM THK)	
	12	2	**165-2140**	2	BOLT	
	13	1	**165-2141**	1	BOLT	
	14	1	**168-9001**	4	BOLT	
	15	2	**183-1165**	1	PLUG	
	16	2	**190-3762**	4	WASHER	
	17	2	**217-5859**	1	VALVE-BREATHER (CRANKCASE)	
	18	2	**217-5861**	1	PLATE-RETAINING	
	19	2	**217-5862**	6	BOLT	
	20	3	**217-5864**	1	GASKET	
	21	1	**225-8533**	2	GASKET (TURBOCHARGER)	
	22	2	**233-0695**	1	SEAL-VALVE COVER	
	23	1	**236-9987**	1	MANIFOLD-EXHAUST	
	24	2	**238-8731**	1	ADAPTER-BREATHER	
	25	1	**238-9196**	1	GASKET-TURBOCHARGER	
	26	1	**238-9200**	5	BOLT (M8X1.25X25-MM)	
	27	2	**238-9295**	4	BOLT	
	28	1	**238-9349**	1	TURBOCHARGER GP	
	29	1	**239-0187**	1	BRACKET	
	30	1	**239-0228**	1	TUBE AS	
	30A	1	**225-8526**	2	WASHER (10.4X13.75X1.37-MM THK)	
	30B	1	**239-0169**	1	BOLT-SPECIAL (BANJO)	
	30C	1	**239-0227**	2	CLIP	
	31	1	**239-0229**	1	SPACER	
	32	1	**239-0232**	4	STUD (M8X1.25X31-MM)	
	33	3	**249-1486**	1	CONNECTION-AIR	
	34	3	**249-1532**	1	HOSE-AIR INLET	
	35	1	**249-7263**	4	BOLT	
	36	2	**262-3975**	1	GASKET	
	37	1	**268-3421**	1	ELBOW-EXHAUST	
	38	1	**304-5061**	1	GASKET	
	39	1	**317-0962**	1	TUBE-TURBOCHARGER OIL	
	40	2	**326-8546**	1	COVER-CYLINDER HEAD	

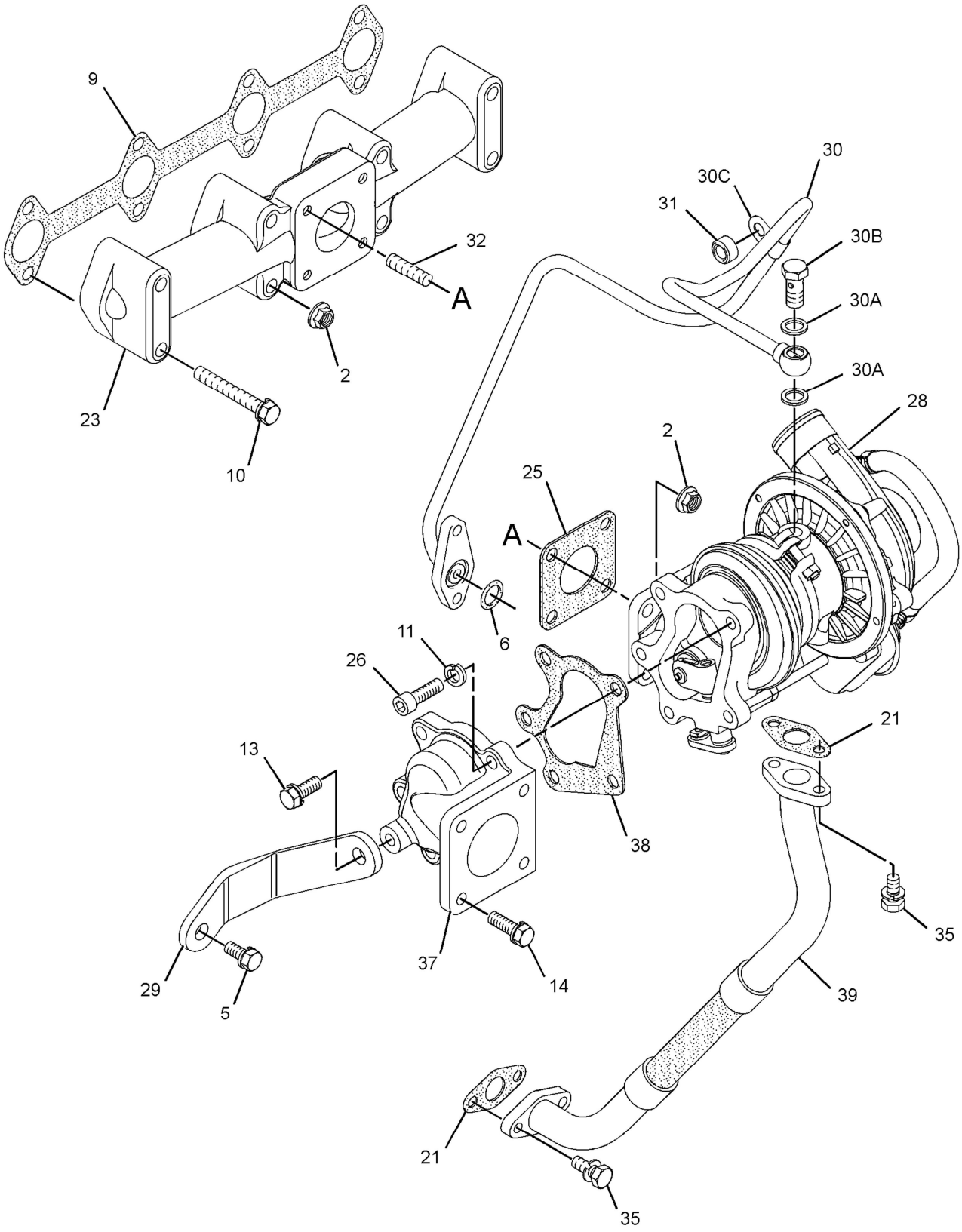

GRAPHIC #1 g01622366

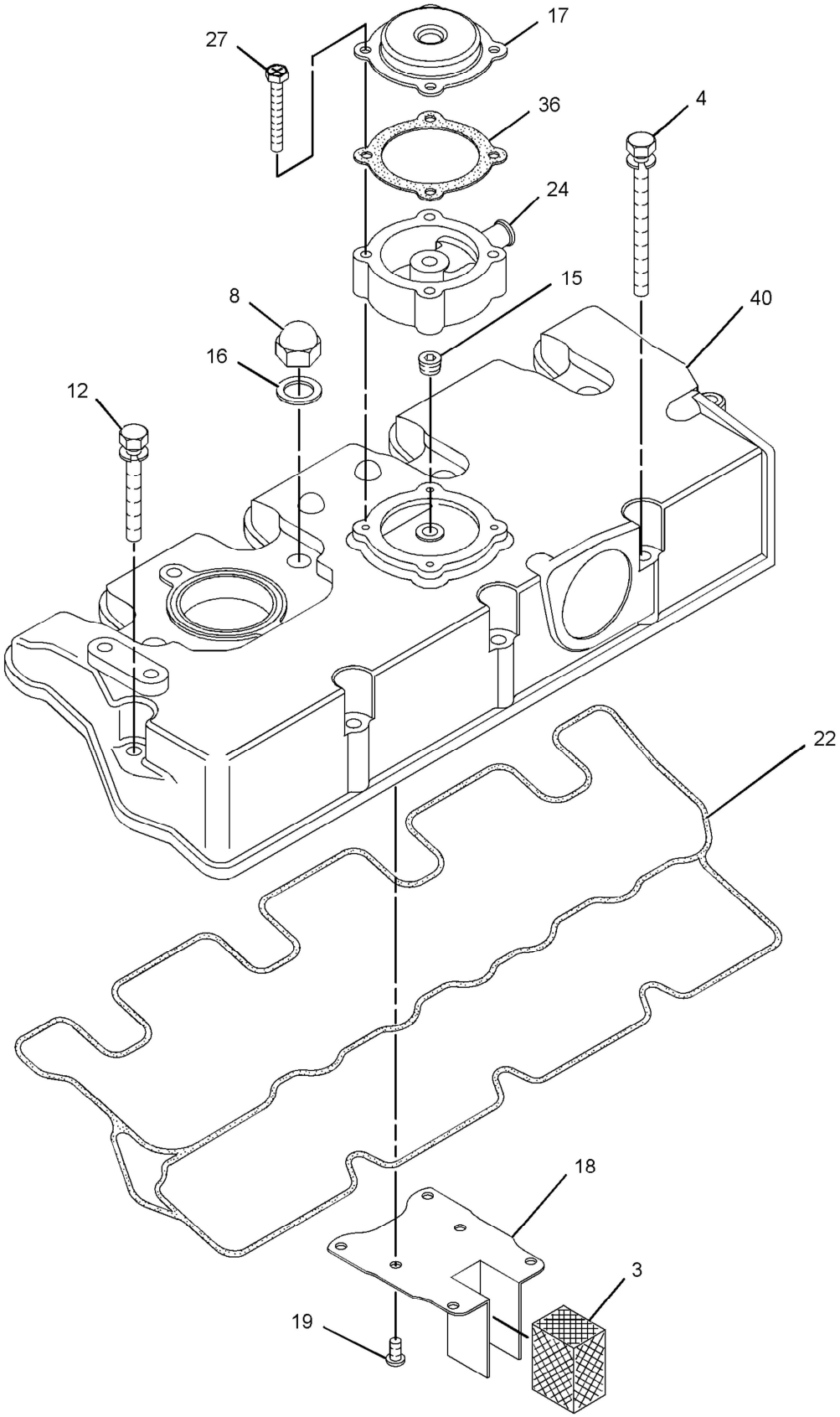

GRAPHIC #2

g01622367

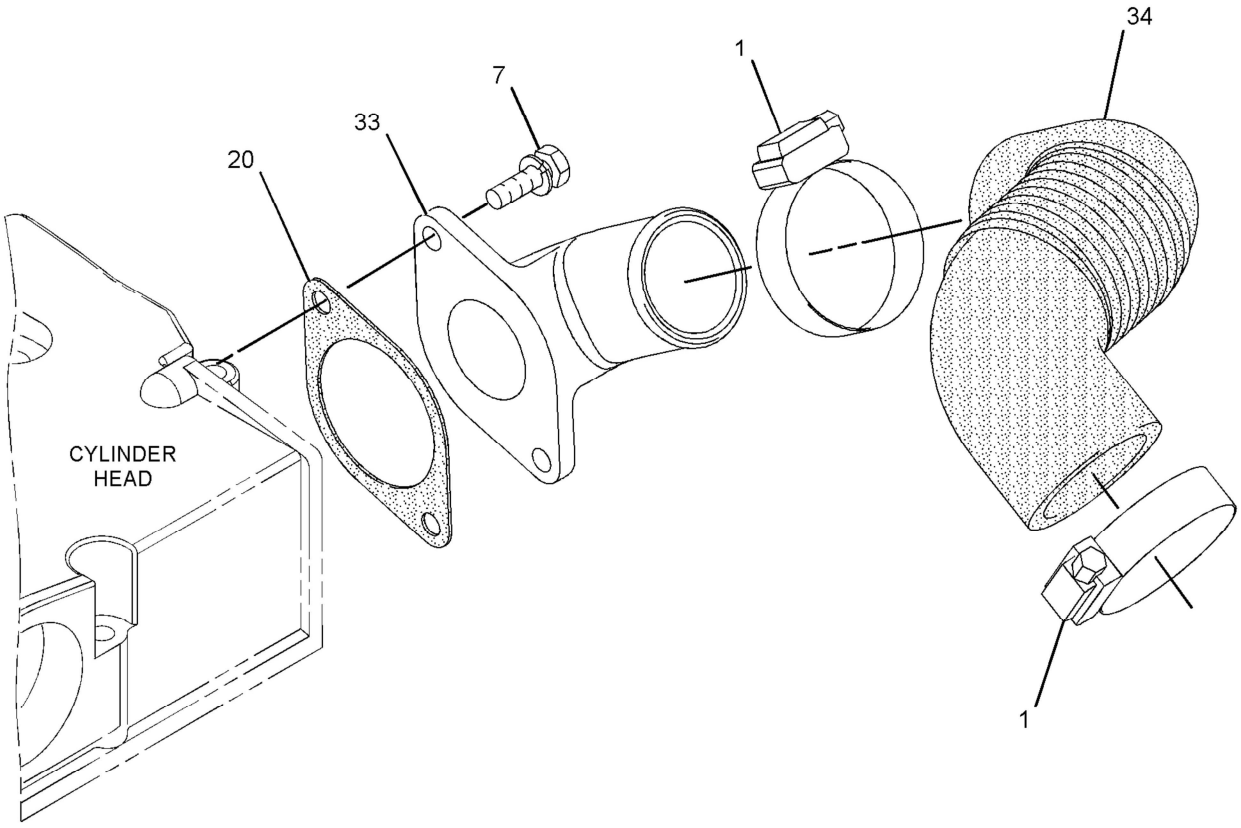

GRAPHIC #3 **<END>** g01622369

317-7187 CONTROL GP-GOVERNOR

SMCS-1265, 1276 **i02895191**

NOTE	REF NO	GRAPHIC REF	PART NUMBER	QTY	PART NAME 1 2 3 4 5 6 (PRODUCT LEVEL)	SEE PAGE
M	1	1	**5C-2890**	1	NUT (M6X1-THD)	
	2	1	**139-5511**	1	CAP (TAMPER RESISTANT)	
	3	1	**153-5592**	1	NUT	
	4	1	**153-6415**	2	WASHER	
	5	1	**153-7983**	1	PIN	
	6	1	**154-1403**	1	SEAL-O-RING	
	7	1	**154-2715**	1	WASHER	
M	8	1	**8T-4971**	2	BOLT (M6X1X30-MM)	
	9	1	**162-2207**	1	NUT	
	10	1	**183-3538**	4	BOLT	
	11	1	**217-7115**	1	CAP (TAMPER RESISTANT)	
	12	1	**308-1877**	1	BRACKET	
	13	1	**308-1878**	1	GASKET	
	14	1	**308-1882**	1	SPRING	
	15	1	**308-1889**	1	NUT	
	16	1	**308-1892**	1	NUT	
	17	1	**308-1897**	2	RING	
	18	1	**308-1901**	1	CAP (FRONT HOUSING)	
	19	1	**308-4266**	1	SHAFT	
	20	1	**309-6728**	1	SHAFT	
	21	1	**309-6732**	1	BOLT	
	22	1	**311-0655**	1	SPRING	
	23	1	**313-5832**	1	BOLT AS	
	23A	1	**153-7987**	1	WASHER	
	23B	1	**191-9297**	1	NUT	
	23C	1	**313-5833**	1	SPRING	
	24	1	**317-7195**	1	SPRING	
	25	1	**319-3252**	1	SENSOR-SPEED (ENGINE TIMING)	
	26	1	**321-4249**	1	NUT	
	27	1	**332-1361**	1	CAP-PROTECTION	
	28	1	**334-0732**	1	ARM (FRONT HOUSING)	
	29	1	**322-7492**	1	LEVER-CONTROL	
	30	1	**322-7493**	1	LEVER-CONTROL	

M-METRIC PART

317-7187 **CONTROL GP-GOVERNOR** *(contd.)* **i02895191**

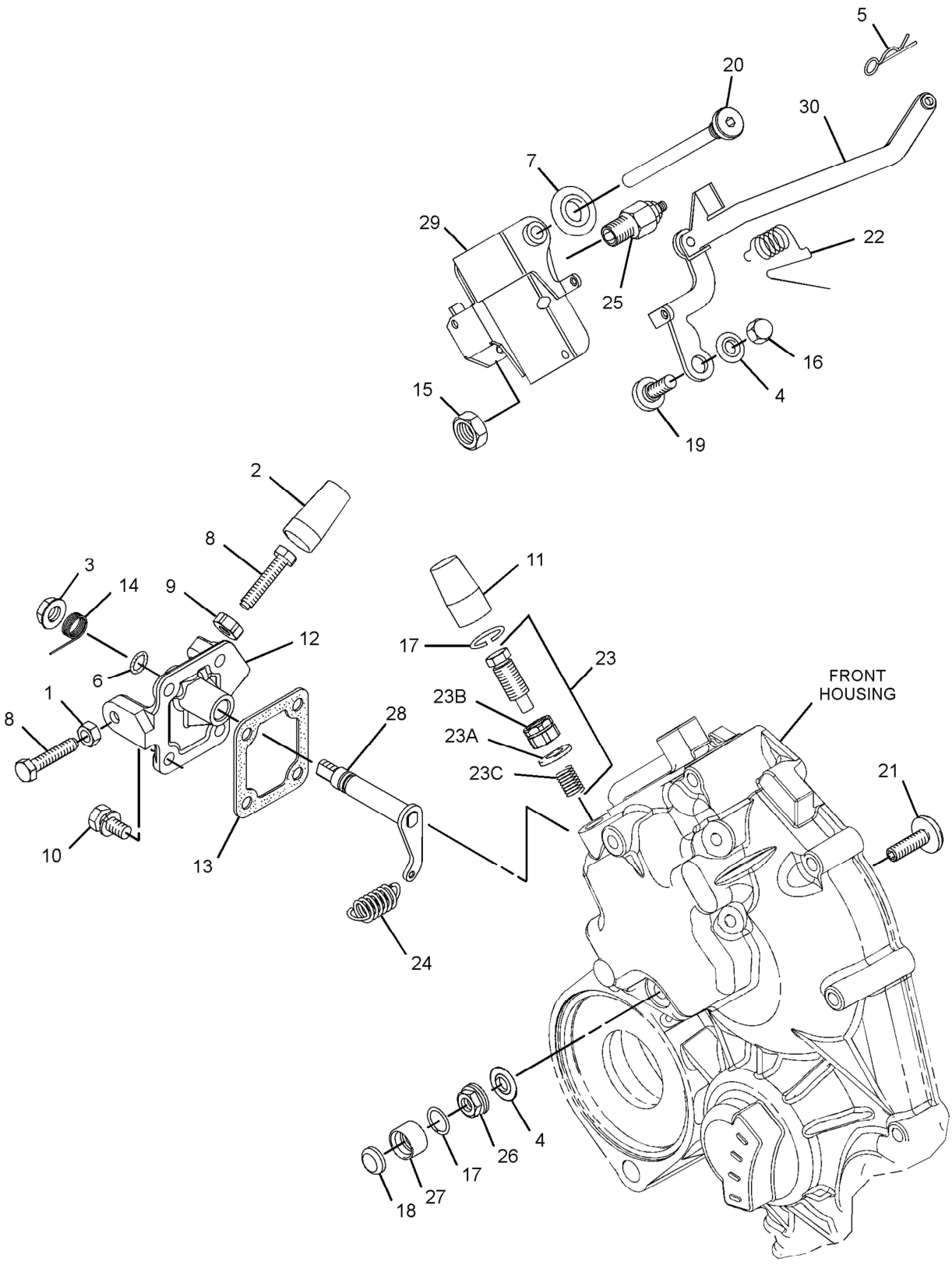

GRAPHIC #1 **<END>** g01628367

FUEL SYSTEM

325-5662 CONTROL GP-GOVERNOR

SMCS-1265, 1276 **i03133562**

NOTE	REF NO	GRAPHIC REF	PART NUMBER	QTY	PART NAME 1 2 3 4 5 6 (PRODUCT LEVEL)	SEE PAGE
M	1	1	**5C-2890**	1	NUT (M6X1-THD)	
	2	1	**139-5511**	1	CAP (TAMPER RESISTANT)	
	3	1	**153-5592**	1	NUT	
	4	1	**153-6415**	2	WASHER	
	5	1	**153-7983**	1	PIN	
	6	1	**154-1403**	1	SEAL-O-RING	
	7	1	**154-2715**	1	WASHER	
M	8	1	**8T-4971**	1	BOLT (M6X1X30-MM)	
	9	1	**162-2207**	1	NUT	
	10	1	**183-3538**	4	BOLT	
	11	1	**217-7115**	1	CAP (TAMPER RESISTANT)	
	12	1	**308-1877**	1	BRACKET	
	13	1	**308-1878**	1	GASKET	
	14	1	**308-1882**	1	SPRING	
	15	1	**308-1889**	1	NUT	
	16	1	**308-1892**	1	NUT	
	17	1	**308-1897**	2	RING	
	18	1	**308-1901**	1	CAP	
	19	1	**308-4266**	1	SHAFT	
	20	1	**309-6728**	1	SHAFT	
	21	1	**309-6732**	1	BOLT	
	22	1	**311-0655**	1	SPRING	
	23	1	**313-2025**	1	SENSOR-SPEED (TIMING, CAMSHAFT)	
	24	1	**315-5236**	1	BOLT AS	
	24A	1	**153-7987**	1	WASHER	
	24B	1	**191-9297**	1	NUT	
	24C	1	**315-5235**	1	SPRING	
	25	1	**321-3145**	1	SPRING	
	26	1	**321-4249**	1	NUT	
	27	1	**332-1361**	1	CAP-PROTECTION	
	28	1	**334-0732**	1	ARM	
	29	1	**322-7492**	1	LEVER-CONTROL	
	30	1	**322-7493**	1	LEVER-CONTROL	
	31	1	**154-1407**	1	BOLT	

M-METRIC PART

325-5662 **CONTROL GP-GOVERNOR** *(contd.)* **i03133562**

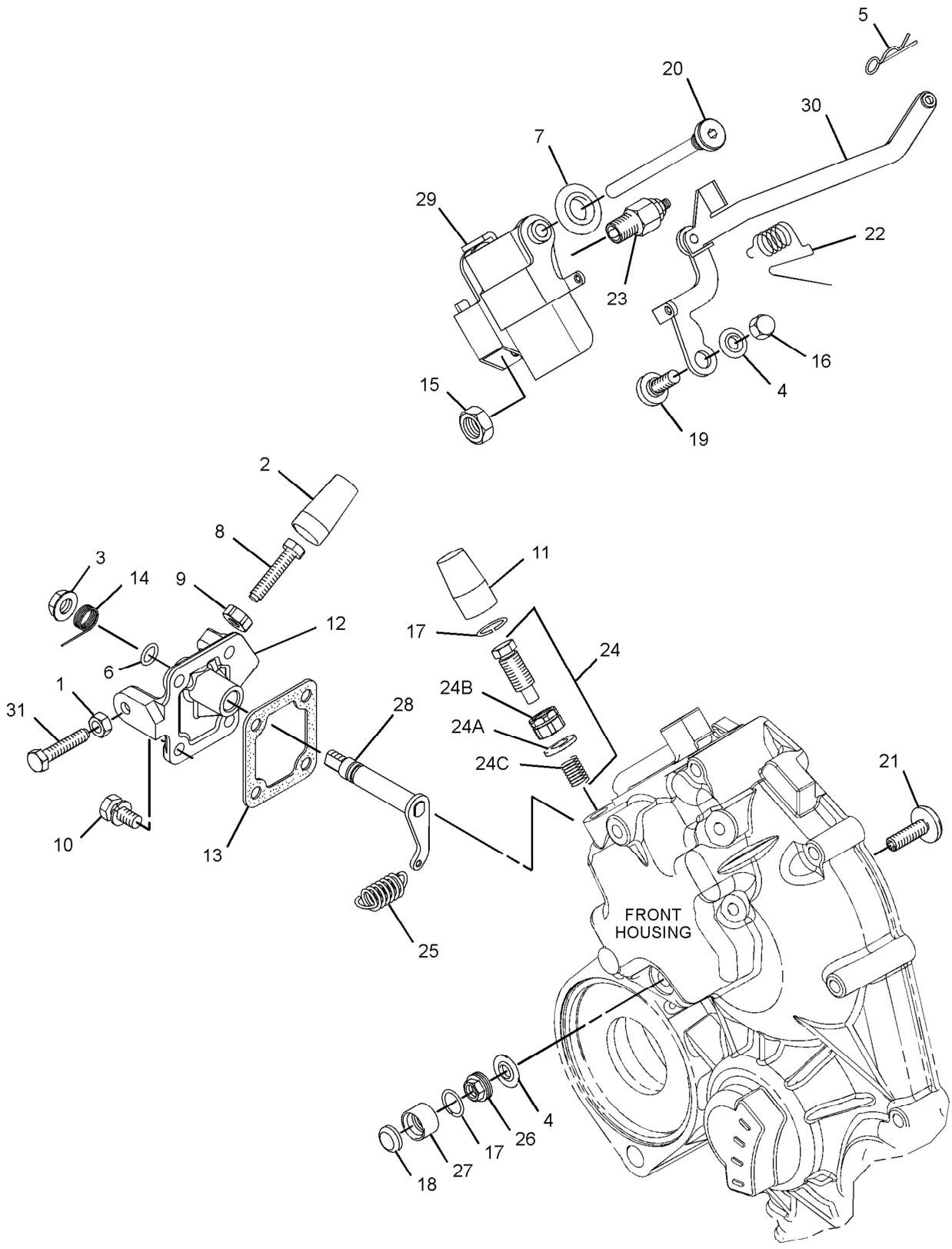

GRAPHIC #1 **<END>** g01629253

325-9475 CONTROL GP-GOVERNOR

SMCS-1265, 1276 **i02958752**

NOTE	REF NO	GRAPHIC REF	PART NUMBER	QTY	PART NAME 1 2 3 4 5 6 (PRODUCT LEVEL)	SEE PAGE
M	1	1	**5C-2890**	1	NUT (M6X1-THD)	
	2	1	**139-5511**	1	CAP (TAMPER RESISTANT)	
	3	1	**153-5592**	1	NUT	
	4	1	**153-6415**	2	WASHER	
	5	1	**153-7983**	1	PIN	
	6	1	**154-1403**	1	SEAL-O-RING	
	7	1	**154-2715**	1	WASHER	
M	8	1	**8T-4971**	2	BOLT (M6X1X30-MM)	
	9	1	**162-2207**	1	NUT	
	10	1	**183-3538**	4	BOLT	
	11	1	**217-7115**	1	CAP (TAMPER RESISTANT)	
	12	1	**308-1877**	1	BRACKET	
	13	1	**308-1878**	1	GASKET	
	14	1	**308-1882**	1	SPRING	
	15	1	**308-1889**	1	NUT	
	16	1	**308-1892**	1	NUT	
	17	1	**308-1897**	2	RING	
	18	1	**332-1361**	1	CAP-PROTECTION	
	19	1	**321-4249**	1	NUT	
	20	1	**308-1901**	1	CAP	
	21	1	**308-4266**	1	SHAFT	
	22	1	**309-6728**	1	SHAFT	
	23	1	**309-6732**	1	BOLT	
	24	1	**311-0655**	1	SPRING	
	25	1	**313-5832**	1	BOLT AS	
	25A	1	**153-7987**	1	WASHER	
	25B	1	**191-9297**	1	NUT	
	25C	1	**313-5833**	1	SPRING	
	26	1	**317-7195**	1	SPRING	
	27	1	**319-3250**	1	SENSOR-SPEED	
	28	1	**334-0732**	1	ARM	
	29	1	**322-7492**	1	LEVER-CONTROL	
	30	1	**322-7493**	1	LEVER-CONTROL	

M-METRIC PART

325-9475 **CONTROL GP-GOVERNOR** *(contd.)* **i02958752**

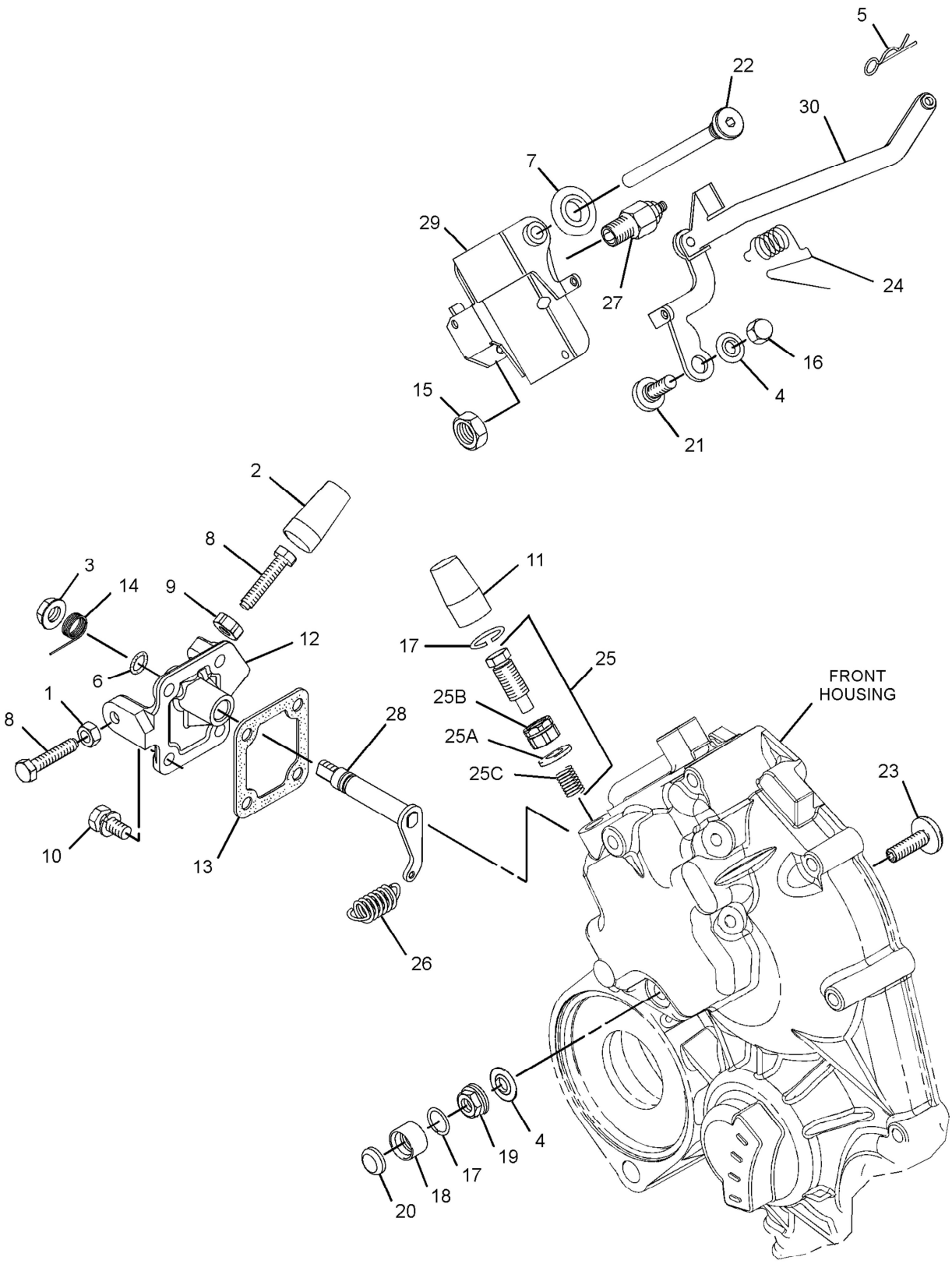

GRAPHIC #1 **<END>** g01629013

FUEL SYSTEM

329-9277 CONTROL GP-GOVERNOR

SMCS-1265, 1276 **i03190807**

NOTE	REF NO	GRAPHIC REF	PART NUMBER	QTY	PART NAME 1 2 3 4 5 6 (PRODUCT LEVEL)	SEE PAGE
M	1	1	**5C-2890**	1	NUT (M6X1-THD)	
	2	1	**139-5511**	1	CAP (TAMPER RESISTANT)	
	3	1	**153-5592**	1	NUT	
	4	1	**153-6415**	2	WASHER	
	5	1	**153-7983**	1	PIN	
	6	1	**154-1403**	1	SEAL-O-RING	
	7	1	**154-2715**	1	WASHER	
M	8	1	**8T-4971**	2	BOLT (M6X1X30-MM)	
	9	1	**162-2207**	1	NUT	
	10	1	**183-3538**	4	BOLT	
	11	1	**217-7115**	1	CAP (TAMPER RESISTANT)	
	12	1	**308-1877**	1	BRACKET	
	13	1	**308-1878**	1	GASKET	
	14	1	**308-1882**	1	SPRING	
	15	1	**308-1889**	1	NUT	
	16	1	**308-1892**	1	NUT	
	17	1	**308-1897**	2	RING	
	18	1	**308-1901**	1	CAP	
	19	1	**308-4266**	1	SHAFT	
	20	1	**309-6728**	1	SHAFT	
	21	1	**309-6732**	1	BOLT	
	22	1	**311-0655**	1	SPRING	
	23	1	**313-5832**	1	BOLT AS	
	23A	1	**153-7987**	1	WASHER	
	23B	1	**191-9297**	1	NUT	
	23C	1	**313-5833**	1	SPRING	
	24	1	**317-7195**	1	SPRING	
	25	1	**319-3253**	1	SENSOR-SPEED	
	26	1	**321-4249**	1	NUT	
	27	1	**334-0732**	1	ARM	
	28	1	**322-7492**	1	LEVER-CONTROL	
	29	1	**322-7493**	1	LEVER-CONTROL	
	30	1	**330-9189**	1	PLUG	
	31	1	**332-1361**	1	CAP-PROTECTION	

M-METRIC PART

329-9277 **CONTROL GP-GOVERNOR** *(contd.)* **i03190807**

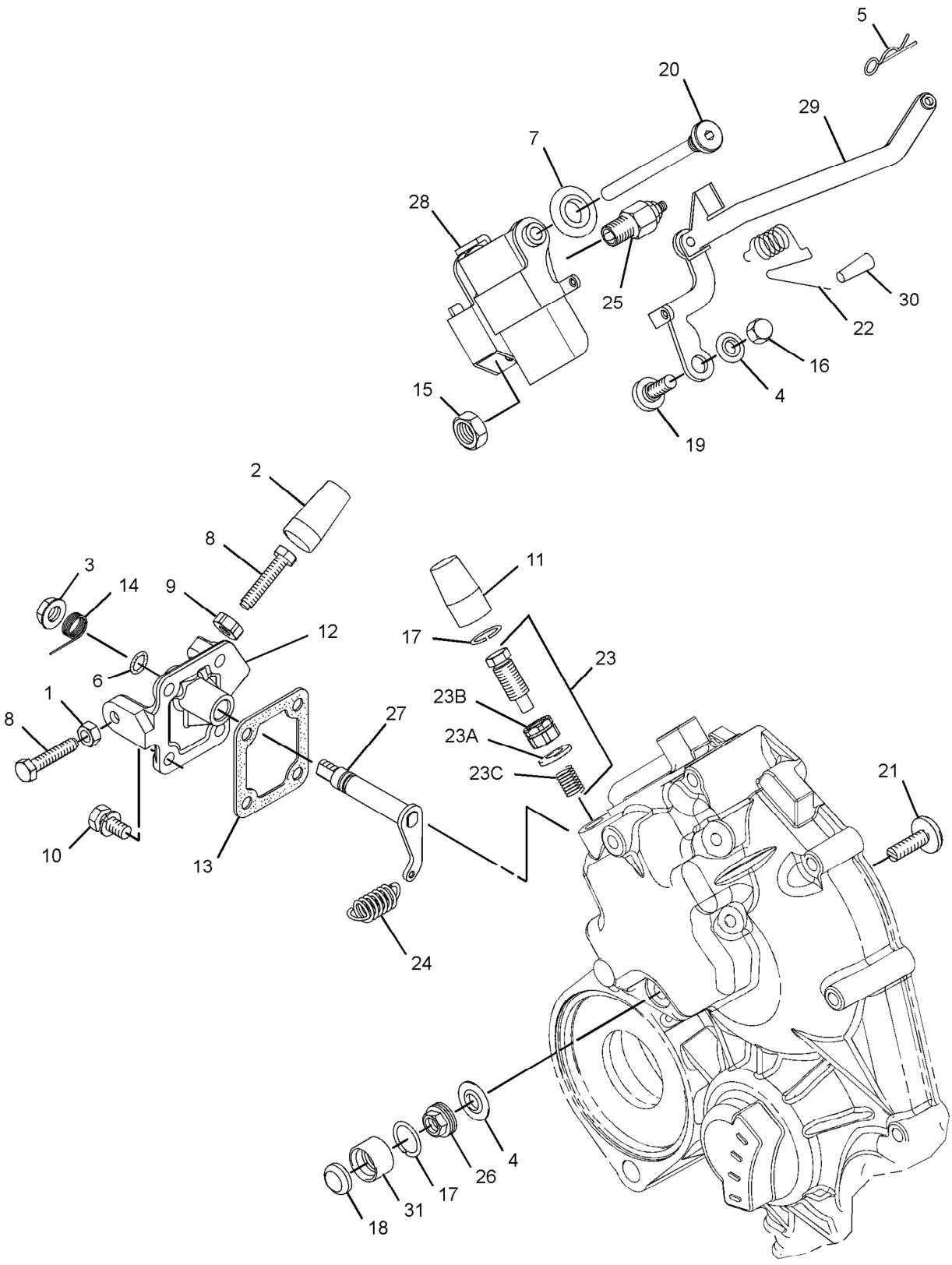

GRAPHIC #1 **<END>** g01616839

FUEL SYSTEM

331-0215 CONTROL GP-GOVERNOR

SMCS-1265, 1276 **i03115941**

NOTE	REF NO	GRAPHIC REF	PART NUMBER	QTY	PART NAME 1 2 3 4 5 6 (PRODUCT LEVEL)	SEE PAGE
M	1	1	**8T-4971**	2	BOLT (M6X1X30-MM)	
M	2	1	**5C-2890**	1	NUT (M6X1-THD)	
	3	1	**139-5511**	1	CAP (TAMPER RESISTANT)	
	4	1	**153-5592**	1	NUT	
	5	1	**153-6415**	2	WASHER	
	6	1	**153-7983**	1	PIN	
	7	1	**154-1403**	1	SEAL-O-RING	
	8	1	**154-2715**	1	WASHER	
	9	1	**162-2207**	1	NUT	
	10	1	**183-3538**	4	BOLT	
	11	1	**217-7115**	1	CAP (TAMPER RESISTANT)	
	12	1	**308-1877**	1	BRACKET	
	13	1	**308-1878**	1	GASKET	
	14	1	**308-1882**	1	SPRING	
	15	1	**308-1888**	1	SENSOR-SPEED (ENGINE)	
	16	1	**308-1889**	1	NUT	
	17	1	**308-1892**	1	NUT	
	18	1	**308-1897**	2	RING	
	19	1	**308-1901**	1	CAP	
	20	1	**308-4266**	1	SHAFT	
	21	1	**309-6728**	1	SHAFT	
	22	1	**309-6732**	1	BOLT	
	23	1	**311-0655**	1	SPRING	
	24	1	**313-5832**	1	BOLT AS	
	24A	1	**153-7987**	1	WASHER	
	24B	1	**191-9297**	1	NUT	
	24C	1	**313-5833**	1	SPRING	
	25	1	**317-7195**	1	SPRING	
	26	1	**321-4249**	1	NUT	
	27	1	**321-8210**	1	CAP AS-PROTECTION	
	28	1	**322-7491**	1	ARM	
	29	1	**322-7492**	1	LEVER-CONTROL	
	30	1	**322-7493**	1	LEVER-CONTROL	

M-METRIC PART

331-0215 **CONTROL GP-GOVERNOR** *(contd.)* **i03115941**

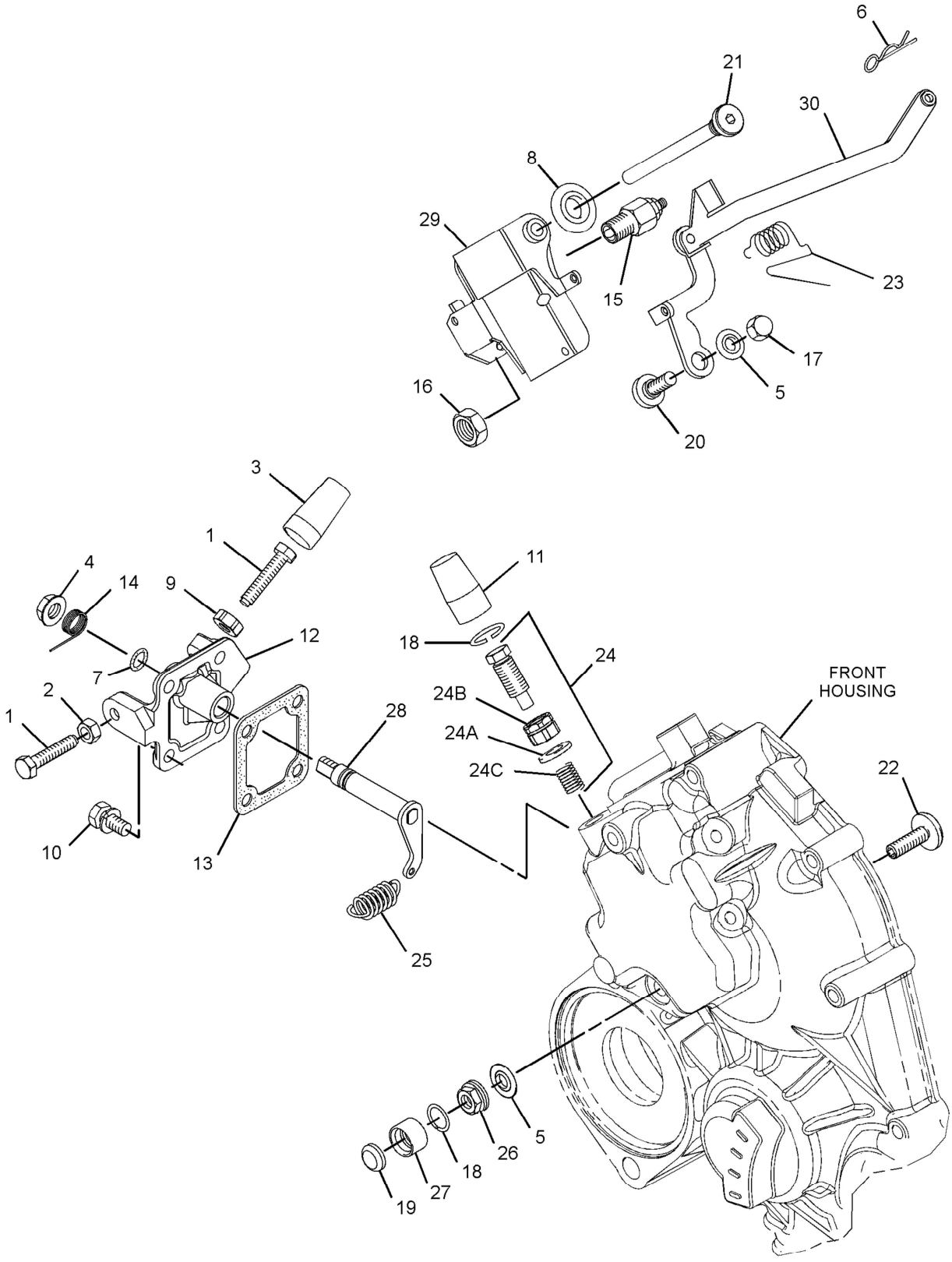

GRAPHIC #1 **<END>** g01628893

FUEL SYSTEM

332-1363 CONTROL GP-GOVERNOR

SMCS-1265, 1276 **i03179595**

NOTE	REF NO	GRAPHIC REF	PART NUMBER	QTY	PART NAME 1 2 3 4 5 6 (PRODUCT LEVEL)	SEE PAGE
M	1	1	**5C-2890**	1	NUT (M6X1-THD)	
	2	1	**139-5511**	1	CAP (TAMPER RESISTANT)	
	3	1	**153-5592**	1	NUT	
	4	1	**153-6415**	2	WASHER	
	5	1	**153-7983**	1	PIN	
	6	1	**154-1403**	1	SEAL-O-RING	
M	7	1	**8T-4971**	2	BOLT (M6X1X30-MM)	
	8	1	**162-2207**	1	NUT	
	9	1	**183-3538**	4	BOLT	
	10	1	**217-7115**	1	CAP (TAMPER RESISTANT)	
	11	1	**308-1878**	1	GASKET	
	12	1	**308-1882**	1	SPRING	
	13	1	**308-1889**	1	NUT	
	14	1	**308-1892**	1	NUT	
	15	1	**308-1897**	2	RING	
	16	1	**308-1901**	1	CAP	
	17	1	**308-4266**	1	SHAFT	
	18	1	**309-6728**	1	SHAFT	
	19	1	**309-6729**	1	SEAL-O-RING	
	20	1	**309-6732**	1	BOLT	
	21	1	**311-0655**	1	SPRING	
	22	1	**313-5832**	1	BOLT AS	
	22A	1	**153-7987**	1	WASHER	
	22B	1	**191-9297**	1	NUT	
	22C	1	**313-5833**	1	SPRING	
	23	1	**317-7195**	1	SPRING	
	24	1	**319-3250**	1	SENSOR-SPEED	
	25	1	**321-4249**	1	NUT	
	26	1	**322-7492**	1	LEVER-CONTROL	
	27	1	**322-7493**	1	LEVER-CONTROL	
	28	1	**330-9189**	1	PLUG	
	29	1	**332-1361**	1	CAP-PROTECTION	
	30	1	**334-0732**	1	ARM	
	31	1	**335-5578**	1	BRACKET	

M-METRIC PART

332-1363 **CONTROL GP-GOVERNOR** *(contd.)* **i03179595**

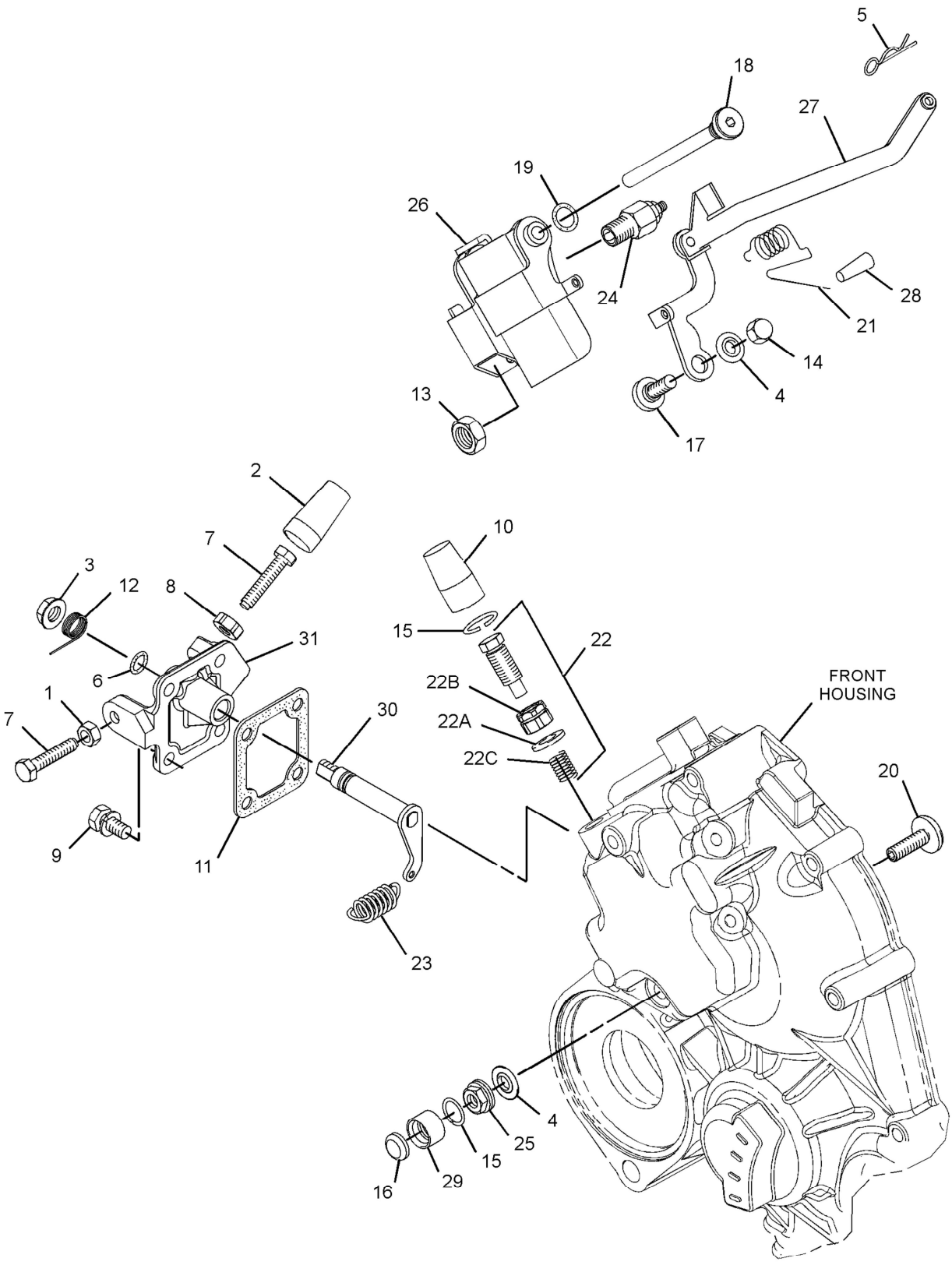

GRAPHIC #1 **<END>** g01632413

308-5704 FILTER GP-FUEL

SMCS-1261 **i02979432**

NOTE	REF NO	GRAPHIC REF	PART NUMBER	QTY	PART NAME 1 2 3 4 5 6 (PRODUCT LEVEL)	SEE PAGE
	1	1	**276-1804**	1	FILTER GP-FUEL	
	1A	1	**276-1806**	1	FILTER ELEMENT-FUEL (FILTER)	
	1B	1	**302-7776**	1	BOWL-FUEL FILTER	
	1C	1	**302-7777**	3	PLUG-DRAIN (FUEL FILTER)	
	1D	1	**302-7778**	1	SEAL	

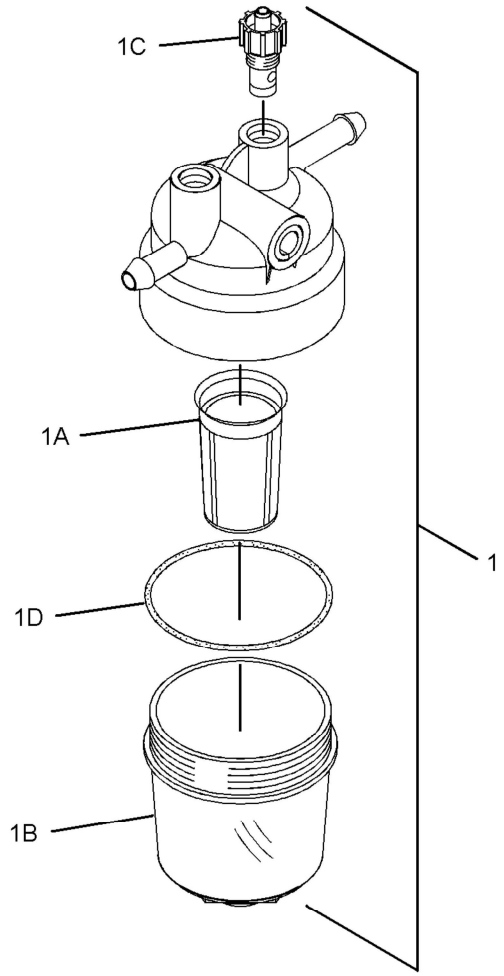

GRAPHIC #1 **<END>** g01363080

FUEL SYSTEM

325-5671 FILTER GP-FUEL

SMCS-1261 **i02962248**

NOTE	REF NO	GRAPHIC REF	PART NUMBER	QTY	PART NAME 1 2 3 4 5 6 (PRODUCT LEVEL)	SEE PAGE
	1	1	**155-8080**	1	FILTER GP-FUEL	
	1A	1	**150-4142**	1	FILTER-FUEL	
	1B	1	**160-3547**	1	PLUG	
	1C	1	**160-3548**	5	WASHER	
	1D	1	**160-3549**	2	BOLT	
	2	1	**155-8082**	2	CONNECTOR	

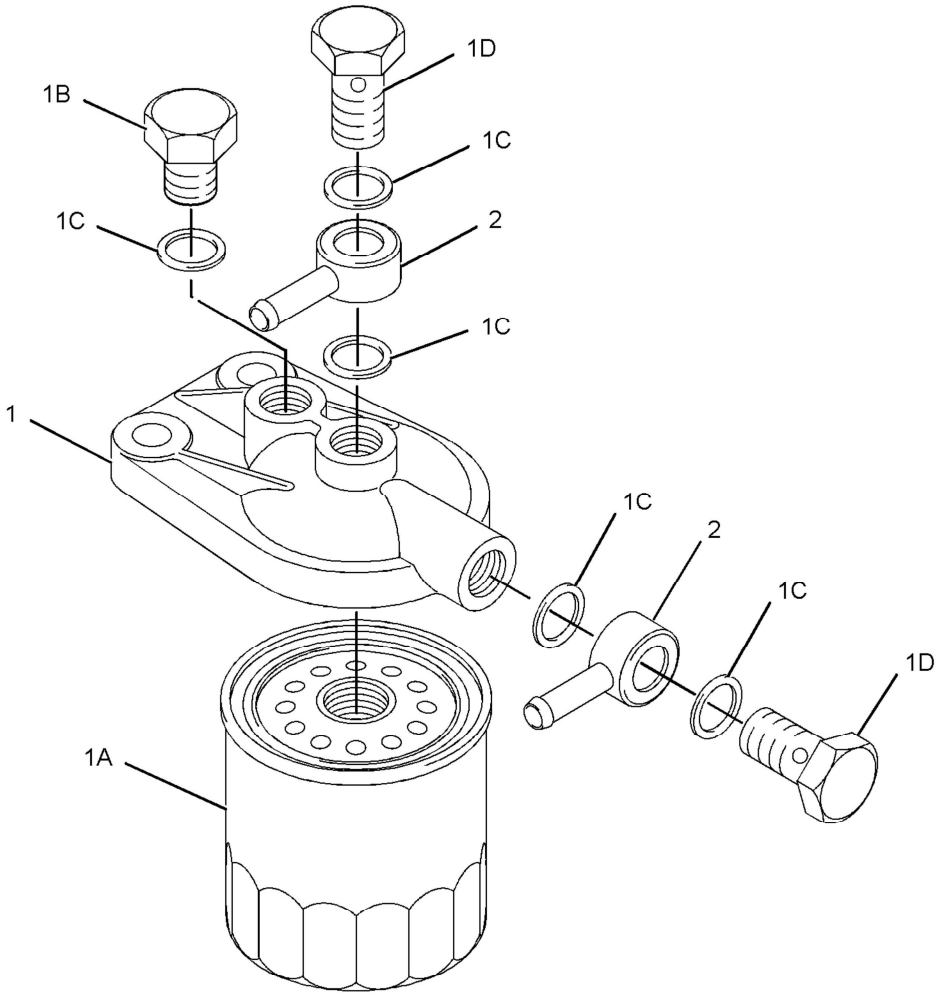

GRAPHIC #1 **<END>** g01538963

FUEL SYSTEM

311-9024 GOVERNOR GP

SMCS-1264, 1908 **i02995755**

NOTE	REF NO	GRAPHIC REF	PART NUMBER	QTY	PART NAME 1 2 3 4 5 6 (PRODUCT LEVEL)	SEE PAGE
M	1	1	**5C-2890**	1	NUT (M6X1-THD)	
	2	1	**139-5511**	1	CAP (TAMPER RESISTANT)	
	3	1	**153-5592**	1	NUT	
	4	1	**153-6415**	2	WASHER	
	5	1	**153-7983**	1	PIN	
	6	1	**154-1403**	1	SEAL-O-RING	
M	7	1	**8T-4971**	2	BOLT (M6X1X30-MM)	
	8	1	**162-2207**	1	NUT	
	9	1	**183-3538**	4	BOLT	
	10	1	**217-7115**	1	CAP (TAMPER RESISTANT)	
	11	1	**308-1877**	1	BRACKET	
	12	1	**308-1878**	1	GASKET	
C	13	1	**334-0732**	1	ARM	
	14	1	**308-1882**	1	SPRING	
C	15	1	**322-7492**	1	LEVER-CONTROL	
	16	1	**308-1889**	1	NUT	
C	17	1	**322-7493**	1	LEVER-CONTROL	
	18	1	**308-1892**	1	NUT	
	19	1	**308-1897**	2	RING	
	20	1	**332-1361**	1	CAP-PROTECTION	
	21	1	**321-4249**	1	NUT	
	22	1	**308-1901**	1	CAP	
	23	1	**308-4266**	1	SHAFT	
	24	1	**309-6728**	1	SHAFT	
	25	1	**309-6729**	1	SEAL-O-RING	
	26	1	**319-3252**	1	SENSOR-SPEED (ENGINE TIMING)	
	27	1	**313-5832**	1	BOLT AS	
	27A	1	**153-7987**	1	WASHER	
	27B	1	**191-9297**	1	NUT	
	27C	1	**313-5833**	1	SPRING	
	28	1	**309-6732**	1	BOLT	
	29	1	**317-7195**	1	SPRING	
	30	1	**311-0655**	1	SPRING	

C-CHANGE FROM PREVIOUS TYPE
M-METRIC PART

311-9024 **GOVERNOR GP** *(contd.)* **i02995755**

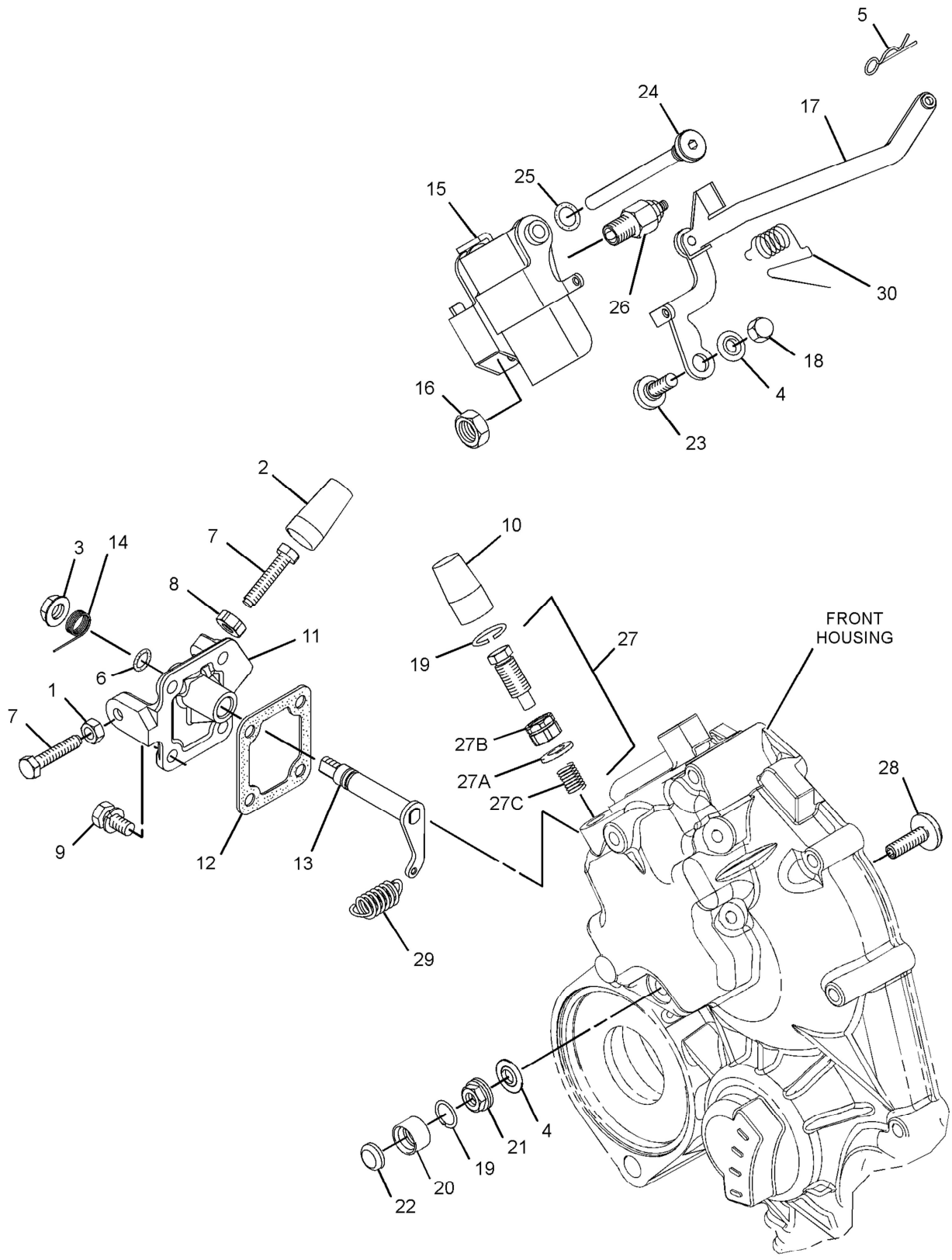

GRAPHIC #1 **<END>** g01626632

FUEL SYSTEM

323-9146 GOVERNOR GP

SMCS-1264, 1908 **i02908566**

NOTE	REF NO	GRAPHIC REF	PART NUMBER	QTY	PART NAME 1 2 3 4 5 6 (PRODUCT LEVEL)	SEE PAGE
M	1	1	**5C-2890**	1	NUT (M6X1-THD)	
	2	1	**139-5511**	1	CAP (TAMPER RESISTANT)	
	3	1	**153-5592**	1	NUT	
	4	1	**153-6415**	5	WASHER	
	5	1	**153-6861**	1	BOLT	
	6	1	**153-7983**	1	PIN	
	7	1	**154-1403**	1	SEAL-O-RING	
	8	1	**154-2715**	1	WASHER	
M	9	1	**8T-4971**	2	BOLT (M6X1X30-MM)	
	10	1	**162-2207**	1	NUT	
	11	1	**183-3538**	4	BOLT	
	12	1	**217-5860**	4	BOLT	
	13	1	**217-7115**	1	CAP (TAMPER RESISTANT)	
	14	1	**232-0218**	2	CLAMP	
	15	1	**232-0290**	1	CONNECTOR	
	16	1	**308-1877**	1	BRACKET	
	17	1	**308-1878**	1	GASKET	
	18	1	**334-0732**	1	ARM (FRONT HOUSING)	
	19	1	**308-1882**	1	SPRING	
	20	1	**308-1889**	1	NUT	
	21	1	**322-7493**	1	LEVER-CONTROL	
	22	1	**308-1892**	1	NUT	
	23	1	**308-1897**	2	RING	
	24	1	**308-1901**	1	CAP	
	25	1	**308-4266**	1	SHAFT	
	26	1	**309-6728**	1	SHAFT	
	27	1	**309-6732**	1	BOLT	
	28	1	**311-0655**	1	SPRING	
	29	1	**313-5832**	1	BOLT AS	
	29A	1	**153-7987**	1	WASHER	
	29B	1	**191-9297**	1	NUT	
	29C	1	**313-5833**	1	SPRING	
	30	1	**322-7492**	1	LEVER-CONTROL	
	31	1	**317-7195**	1	SPRING	
	32	1	**321-4249**	2	NUT	
	33	1	**321-8209**	1	SENSOR-SPEED (ENGINE TIMING)	
	34	1	**332-1361**	1	CAP-PROTECTION	
	35	1	**321-8211**	1	DIAPHRAGM	
	36	1	**321-8212**	1	COVER	
	37	1	**321-8214**	1	BOLT	
	38	1	**328-5174**	1	LEVER-STOP	
	39	1	**321-8216**	1	TUBE	
	40	1	**321-8217**	1	BOLT	
	41	1	**321-8218**	1	HOSE	

M-METRIC PART

323-9146 **GOVERNOR GP** *(contd.)* **i02908566**

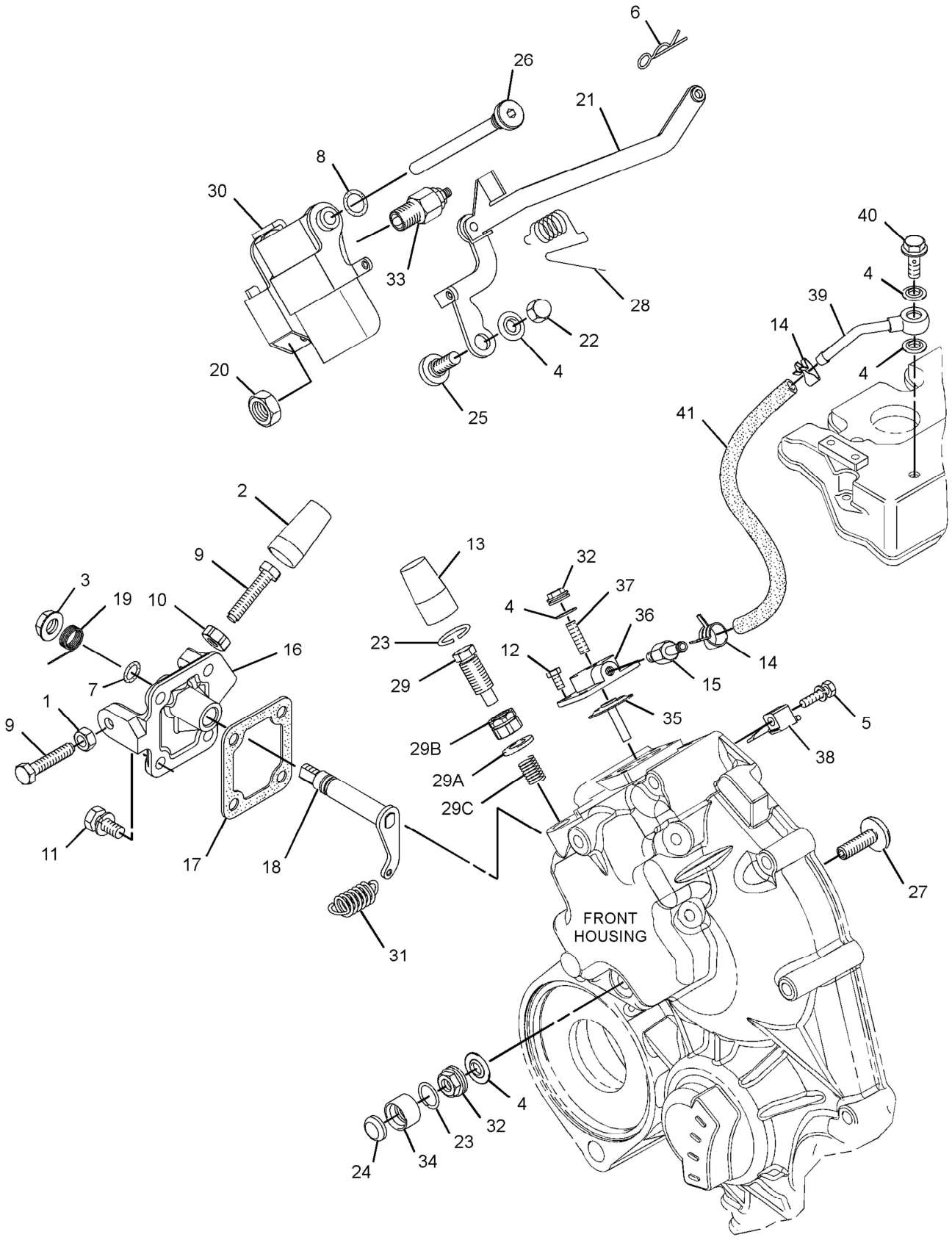

GRAPHIC #1 **<END>** g01629992

315-7814 PUMP & MTG GP-FUEL TRANSFER

SMCS-1256 **i02941455**

NOTE	REF NO	GRAPHIC REF	PART NUMBER	QTY	PART NAME 1 2 3 4 5 6 (PRODUCT LEVEL)	SEE PAGE
	1	1	**6I-0846**	2	BOLT (M6X1X14-MM)	
	2	1	**295-4070**	1	PUMP AS-FUEL TRANSFER	
	3	1	**176-7719**	1	SEAL-O-RING	
	4	1	**155-7984**	1	WASHER	
	5	1	**165-2141**	1	BOLT	

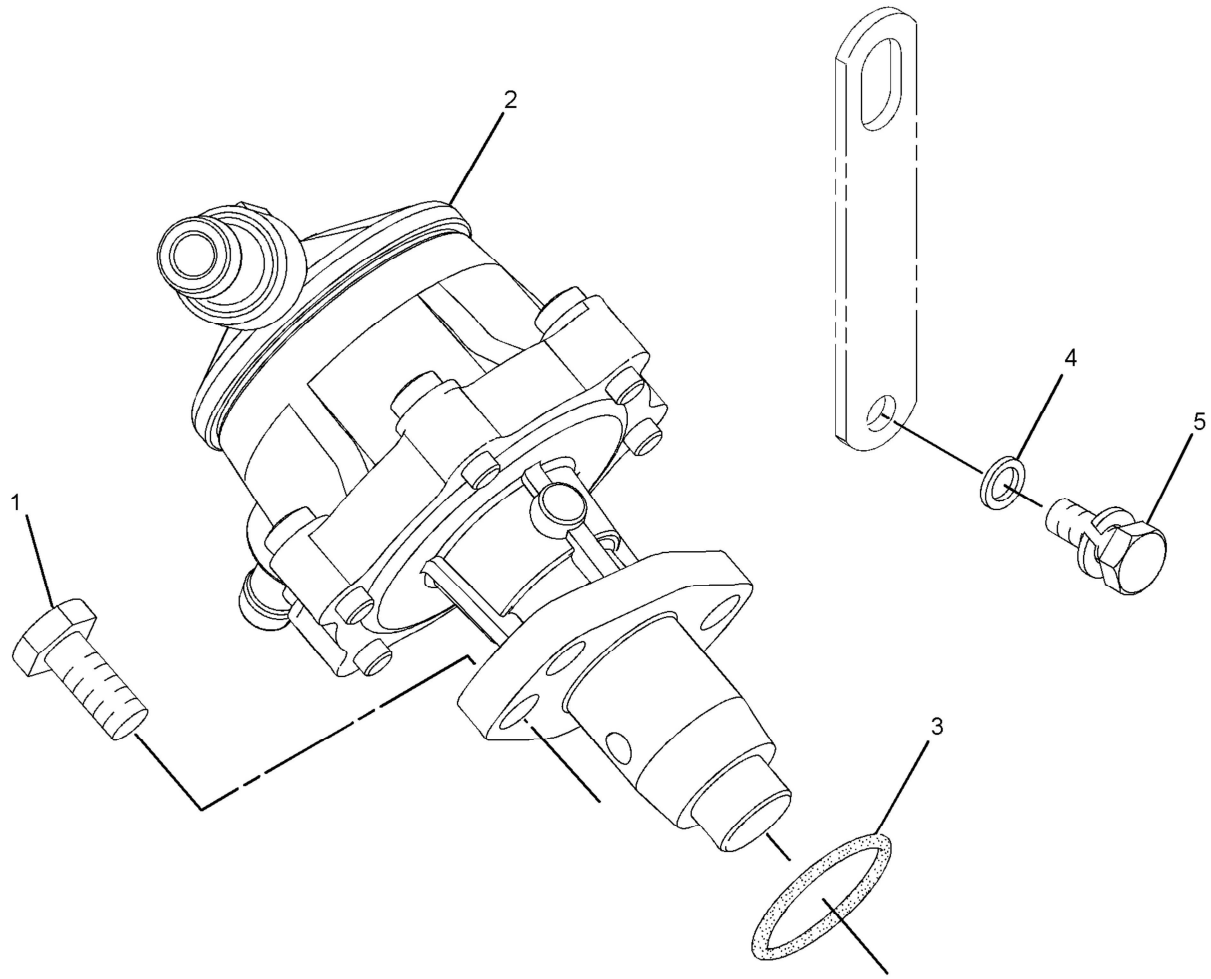

GRAPHIC #1 **<END>** g01542855

FUEL SYSTEM

308-2310 PUMP GP-FILTER & FUEL TRANSFER

SMCS-1256, 1261 **i03044724**

NOTE	REF NO	GRAPHIC REF	PART NUMBER	QTY	PART NAME 1 2 3 4 5 6 (PRODUCT LEVEL)	SEE PAGE
	1	2	**6I-0846**	2	BOLT (M6X1X14-MM)	
	2	1	**7W-4694**	1	PLUG	
	3	1	**032-8100**	2	WASHER (0.531X0.718X0.064-IN THK)	
	4	1	**033-7849**	2	PLUG	
	5	1	**033-7854**	1	FILTER AS-FUEL	
	5A	1	**067-6987**	1	KIT-ELEMENT (FUEL FILTER)	
	5B	1	**069-2922**	2	GASKET (FUEL FILTER)	
	5C	1	**6F-4855**	1	SEAL-O-RING	
	6	1	**067-6269**	2	FERRULE	
	7	1	**067-6317**	1	WASHER (0.4X0.566X0.04-IN THK)	
	8	1	**302-4187**	1	TUBE	
	9	1	**138-7162**	2	BOLT	
	10	1	**154-1399**	2	WASHER	
	11	1	**154-2403**	2	WASHER	
	12	1	**155-7983**	1	LINE-FUEL	
	13	1	**155-7984**	2	WASHER	
	14	1	**155-8085**	2	NUT	
	15	1	**160-3550**	4	CLAMP-HOSE	
	16	1	**165-2141**	1	BOLT	
	17	2	**176-7719**	1	SEAL-O-RING	
	18	1	**218-2355**	1	LINE-FUEL	
	19	1	**311-1174**	1	BRACKET	
	20	1	**234-9556**	1	HOSE-FUEL	
	21	2	**295-4070**	1	PUMP AS-FUEL TRANSFER	
	22	1	**168-9001**	1	BOLT	

308-2310 **PUMP GP-FILTER & FUEL TRANSFER** *(contd.)* **i03044724**

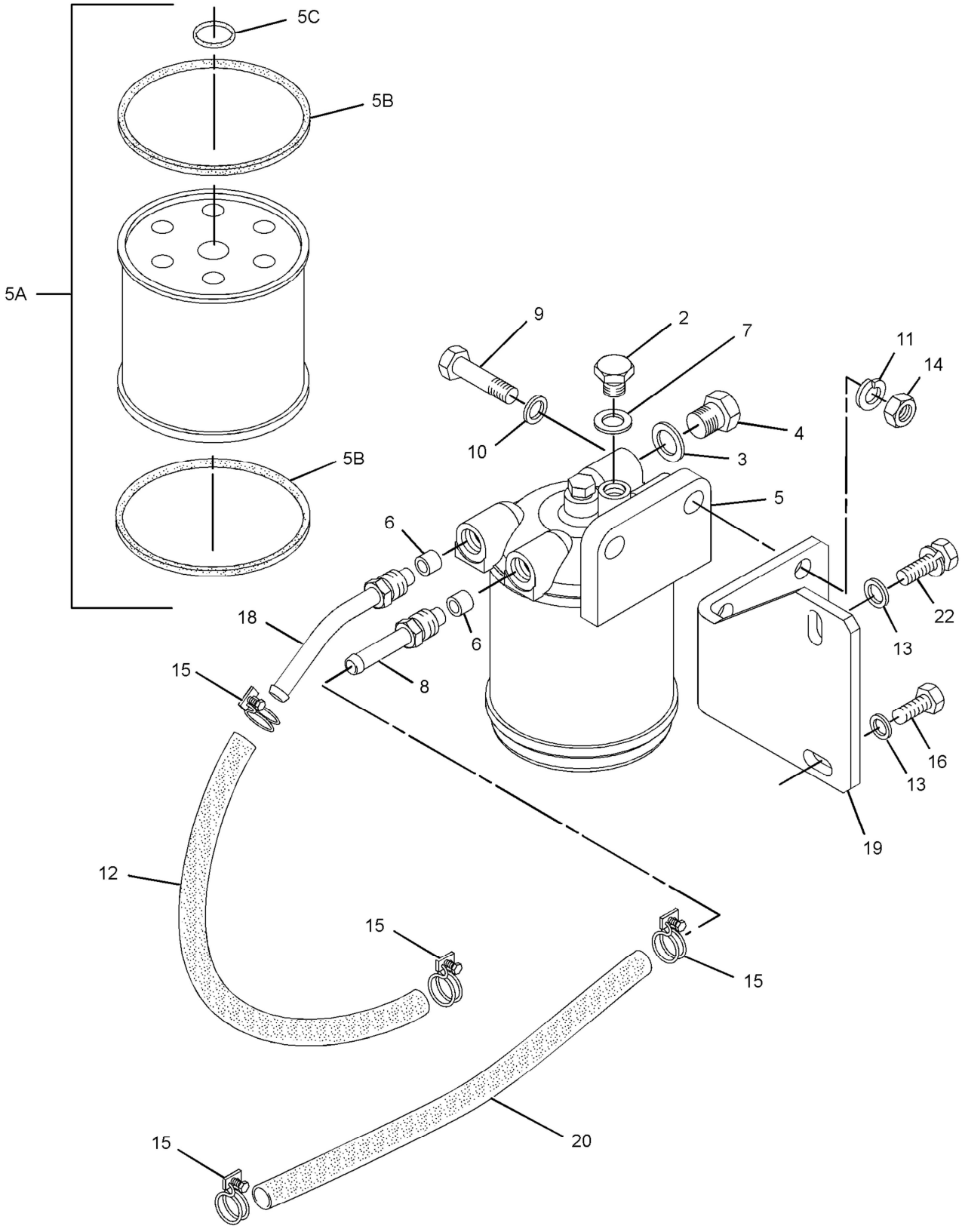

GRAPHIC #1 g01627960

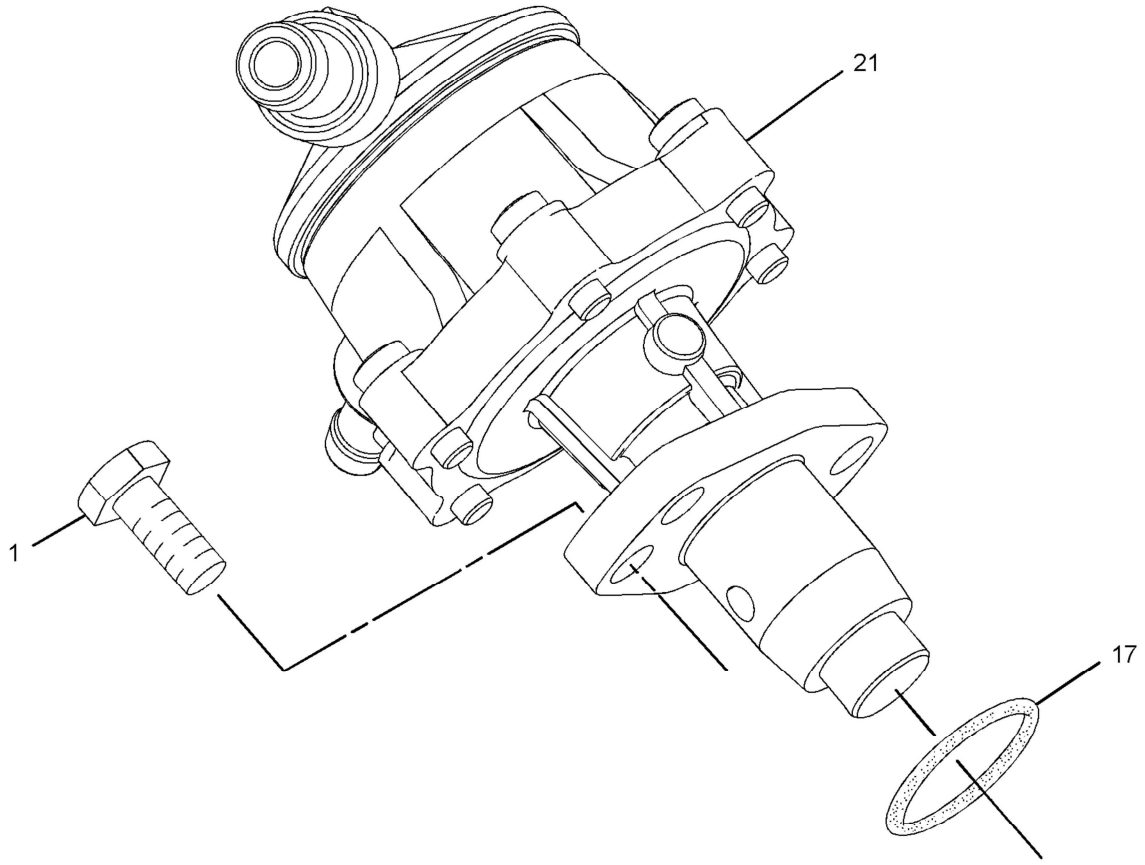

GRAPHIC #2 **<END>** g01398195

306-6346 PUMP GP-FUEL INJECTION

PART OF 325-5665 PUMP GP-FUEL INJECTION

SMCS-1251, 1290 **i02703814**

NOTE	REF NO	GRAPHIC REF	PART NUMBER	QTY	PART NAME 1 2 3 4 5 6 (PRODUCT LEVEL)	SEE PAGE
	1	1	**205-4726**	1	BOLT-SPECIAL (BANJO)	
	2	1	**205-4727**	2	WASHER	
	3	1	**205-4728**	1	CONNECTOR	

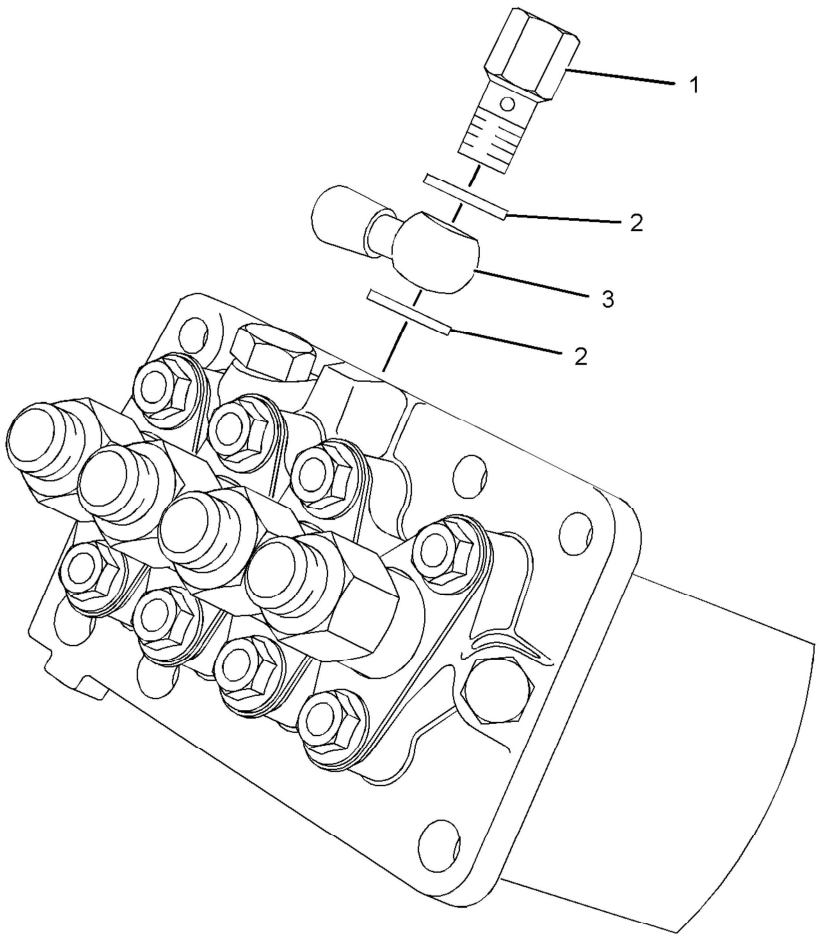

GRAPHIC #1 **<END>** g01281336

FUEL SYSTEM

308-2289 PUMP GP-FUEL INJECTION

SMCS-1251, 1290 **i02752410**

NOTE	REF NO	GRAPHIC REF	PART NUMBER	QTY	PART NAME 1 2 3 4 5 6 (PRODUCT LEVEL)	SEE PAGE
	1	1	**153-5592**	3	NUT	
	2	1	**153-5960**	3	NUT	
	3	1	**154-2713**	2	BOLT	
	4	1	**154-2715**	2	WASHER	
	5	1	**154-2716**	4	SEAL	
B	6	1	**154-3017**	1	SHIM (0.2-MM THK)	
B		1	**302-7822**	1	SHIM (0.25-MM THK)	
B		1	**160-3555**	1	SHIM (0.3-MM THK)	
B		1	**302-7823**	1	SHIM (0.35-MM THK)	
B		1	**160-3556**	1	SHIM (0.4-MM THK)	
B		1	**160-3557**	1	SHIM (0.5-MM THK)	
B		1	**160-3558**	1	SHIM (0.5-MM THK)	
	7	1	**163-5372**	1	WASHER (8X15.4X4-MM THK)	
	8	1	**183-3353**	3	BOLT	
	9	1	**190-3803**	1	BOLT	
	10	1	**217-2760**	1	TUBE AS (CYL NO. 1)	
	11	1	**217-2761**	1	TUBE AS (CYL NO. 2)	
	12	1	**217-2762**	1	TUBE AS (CYL NO. 3)	
	13	1	**217-2763**	1	TUBE AS (CYL NO. 4)	
	14	1	**238-6914**	1	BOLT (M8X1.25X20-MM)	
	15	1	**290-8014**	6	CLAMP	
	16	1	**308-1905**	1	PUMP-FUEL INJECTION	
	17	1	**308-1906**	4	ATOMIZER	
					(EACH INCLUDES)	
	17A	1	**202-1196**	1	WASHER-SPECIAL	
	18	1	**311-7561**	1	TUBE	

B-USE AS REQUIRED

308-2289 **PUMP GP-FUEL INJECTION** *(contd.)* **i02752410**

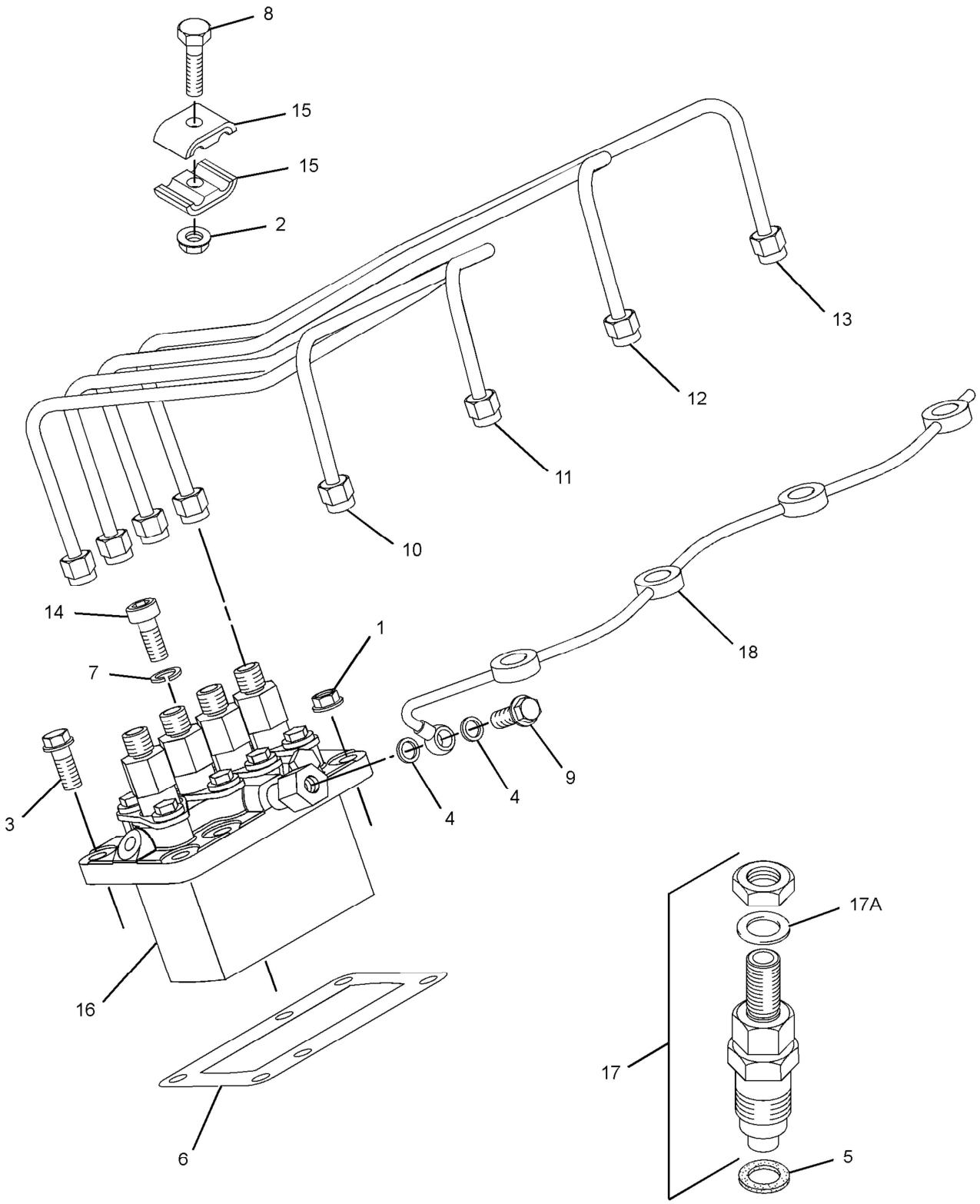

GRAPHIC #1 **<END>** g01414139

308-3330 PUMP GP-FUEL INJECTION

SMCS-1251, 1290 **i02770738**

NOTE	REF NO	GRAPHIC REF	PART NUMBER	QTY	PART NAME 1 2 3 4 5 6 (PRODUCT LEVEL)	SEE PAGE
	1	1	**153-5592**	3	NUT	
	2	1	**153-5960**	3	NUT	
	3	1	**154-2713**	2	BOLT	
	4	1	**154-2715**	2	WASHER	
	5	1	**154-2716**	4	SEAL	
B	6	1	**154-3017**	1	SHIM (0.2-MM THK)	
B		1	**302-7822**	1	SHIM (0.25-MM THK)	
B		1	**160-3555**	1	SHIM (0.3-MM THK)	
B		1	**302-7823**	1	SHIM (0.35-MM THK)	
B		1	**160-3556**	1	SHIM (0.4-MM THK)	
B		1	**160-3557**	1	SHIM (0.5-MM THK)	
B		1	**160-3558**	1	SHIM (0.5-MM THK)	
	7	1	**163-5372**	1	WASHER (8X15.4X4-MM THK)	
	8	1	**183-3353**	3	BOLT	
	9	1	**190-3803**	1	BOLT	
	10	1	**217-2760**	1	TUBE AS (CYL NO. 1)	
	11	1	**217-2761**	1	TUBE AS (CYL NO. 2)	
	12	1	**217-2762**	1	TUBE AS (CYL NO. 3)	
	13	1	**217-2763**	1	TUBE AS (CYL NO. 4)	
M	14	1	**8T-4189**	1	BOLT (M8X1.25X20-MM)	
	15	1	**290-8014**	6	CLAMP	
	16	1	**308-1905**	1	PUMP-FUEL INJECTION	
	17	1	**308-1906**	4	ATOMIZER	
					(EACH INCLUDES)	
	17A	1	**202-1196**	1	WASHER-SPECIAL	
	18	1	**311-7561**	1	TUBE	

B-USE AS REQUIRED
M-METRIC PART

308-3330 **PUMP GP-FUEL INJECTION** *(contd.)* **i02770738**

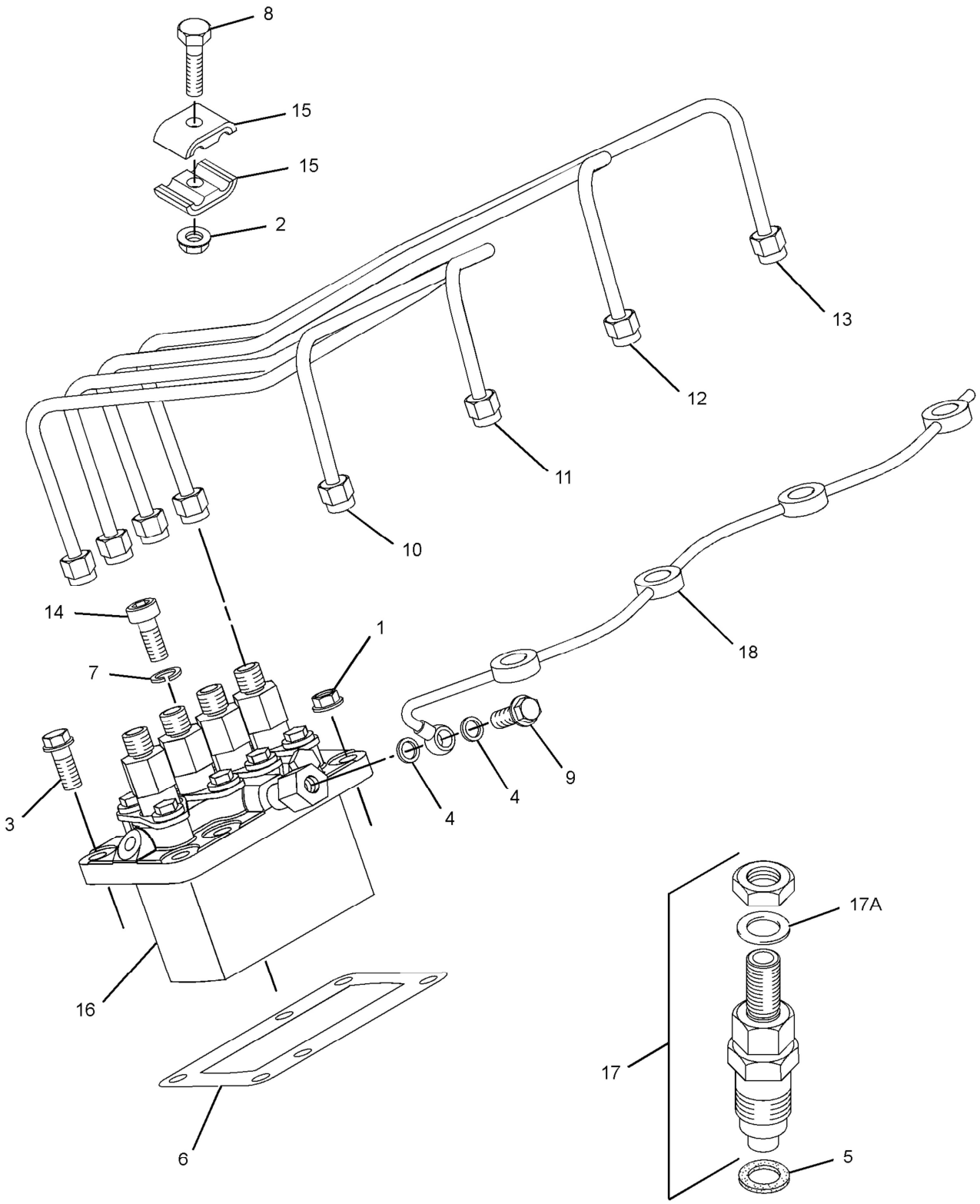

GRAPHIC #1 **<END>** g01414139

FUEL SYSTEM

309-6719 PUMP GP-FUEL INJECTION

SMCS-1251, 1290 **i02770710**

NOTE	REF NO	GRAPHIC REF	PART NUMBER	QTY	PART NAME 1 2 3 4 5 6 (PRODUCT LEVEL)	SEE PAGE
	1	1	**153-5592**	3	NUT	
	2	1	**153-5960**	3	NUT	
	3	1	**154-2713**	2	BOLT	
	4	1	**154-2715**	2	WASHER	
	5	1	**154-2716**	4	SEAL	
B	6	1	**154-3017**	1	SHIM (0.2-MM THK)	
B		1	**302-7822**	1	SHIM (0.25-MM THK)	
B		1	**160-3555**	1	SHIM (0.3-MM THK)	
B		1	**302-7823**	1	SHIM (0.35-MM THK)	
B		1	**160-3556**	1	SHIM (0.4-MM THK)	
B		1	**160-3557**	1	SHIM (0.5-MM THK)	
B		1	**160-3558**	1	SHIM (0.5-MM THK)	
	7	1	**163-5372**	1	WASHER (8X15.4X4-MM THK)	
	8	1	**183-3353**	3	BOLT	
	9	1	**190-3803**	1	BOLT	
	10	1	**217-2760**	1	TUBE AS (CYL NO. 1)	
	11	1	**217-2761**	1	TUBE AS (CYL NO. 2)	
	12	1	**217-2762**	1	TUBE AS (CYL NO. 3)	
	13	1	**217-2763**	1	TUBE AS (CYL NO. 4)	
M	14	1	**8T-4189**	1	BOLT (M8X1.25X20-MM)	
	15	1	**290-8014**	6	CLAMP	
	16	1	**309-6734**	1	PUMP GP-FUEL INJECTION	
	17	1	**154-3018**	4	INJECTOR AS-FUEL	
					(EACH INCLUDES)	
	17A	1	**202-1196**	1	WASHER-SPECIAL	
	17B	1	**205-4731**	1	NUT	
	18	1	**311-7561**	1	TUBE	

B-USE AS REQUIRED
M-METRIC PART

309-6719 **PUMP GP-FUEL INJECTION** *(contd.)* **i02770710**

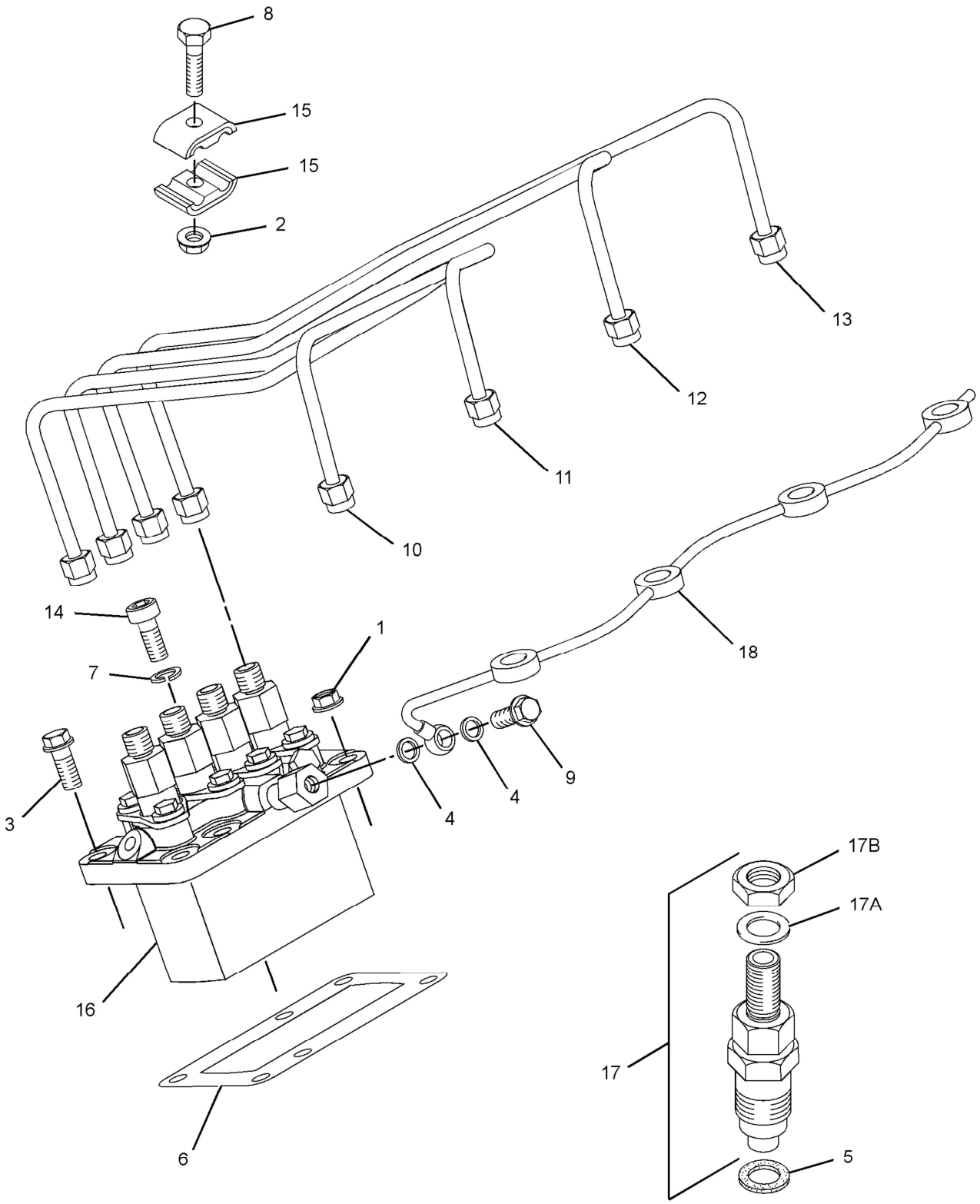

GRAPHIC #1 **<END>** g01414308

FUEL SYSTEM

311-1683 PUMP GP-FUEL INJECTION

SMCS-1251, 1290 **i02812784**

NOTE	REF NO	GRAPHIC REF	PART NUMBER	QTY	PART NAME 1 2 3 4 5 6 (PRODUCT LEVEL)	SEE PAGE
	1	1	**153-5592**	3	NUT	
	2	1	**153-5960**	3	NUT	
	3	1	**154-2713**	2	BOLT	
	4	1	**154-2715**	2	WASHER	
	5	1	**154-2716**	4	SEAL	
	6	1	**154-3018**	4	INJECTOR AS-FUEL	
					(EACH INCLUDES)	
	6A	1	**202-1196**	1	WASHER-SPECIAL	
	6B	1	**205-4731**	1	NUT	
B	7	1	**154-3017**	1	SHIM (0.2-MM THK)	
B			**302-7822**	1	SHIM (0.25-MM THK)	
B			**160-3555**	1	SHIM (0.3-MM THK)	
B			**302-7823**	1	SHIM (0.35-MM THK)	
B			**160-3556**	1	SHIM (0.4-MM THK)	
B			**160-3557**	1	SHIM (0.5-MM THK)	
B			**160-3558**	1	SHIM (0.5-MM THK)	
	8	1	**163-5372**	1	WASHER (8X15.4X4-MM THK)	
	9	1	**183-3353**	3	BOLT	
	10	1	**190-3803**	1	BOLT	
	11	1	**217-2760**	1	TUBE AS (CYL NO. 1)	
	12	1	**217-2761**	1	TUBE AS (CYL NO. 2)	
	13	1	**217-2762**	1	TUBE AS (CYL NO. 3)	
	14	1	**217-2763**	1	TUBE AS (CYL NO. 4)	
	15	1	**311-7561**	1	TUBE	
M	16	1	**8T-4189**	1	BOLT (M8X1.25X20-MM)	
	17	1	**290-8014**	6	CLAMP	
	18	1	**309-6734**	1	PUMP GP-FUEL INJECTION	

B-USE AS REQUIRED
M-METRIC PART

311-1683 **PUMP GP-FUEL INJECTION** *(contd.)* **i02812784**

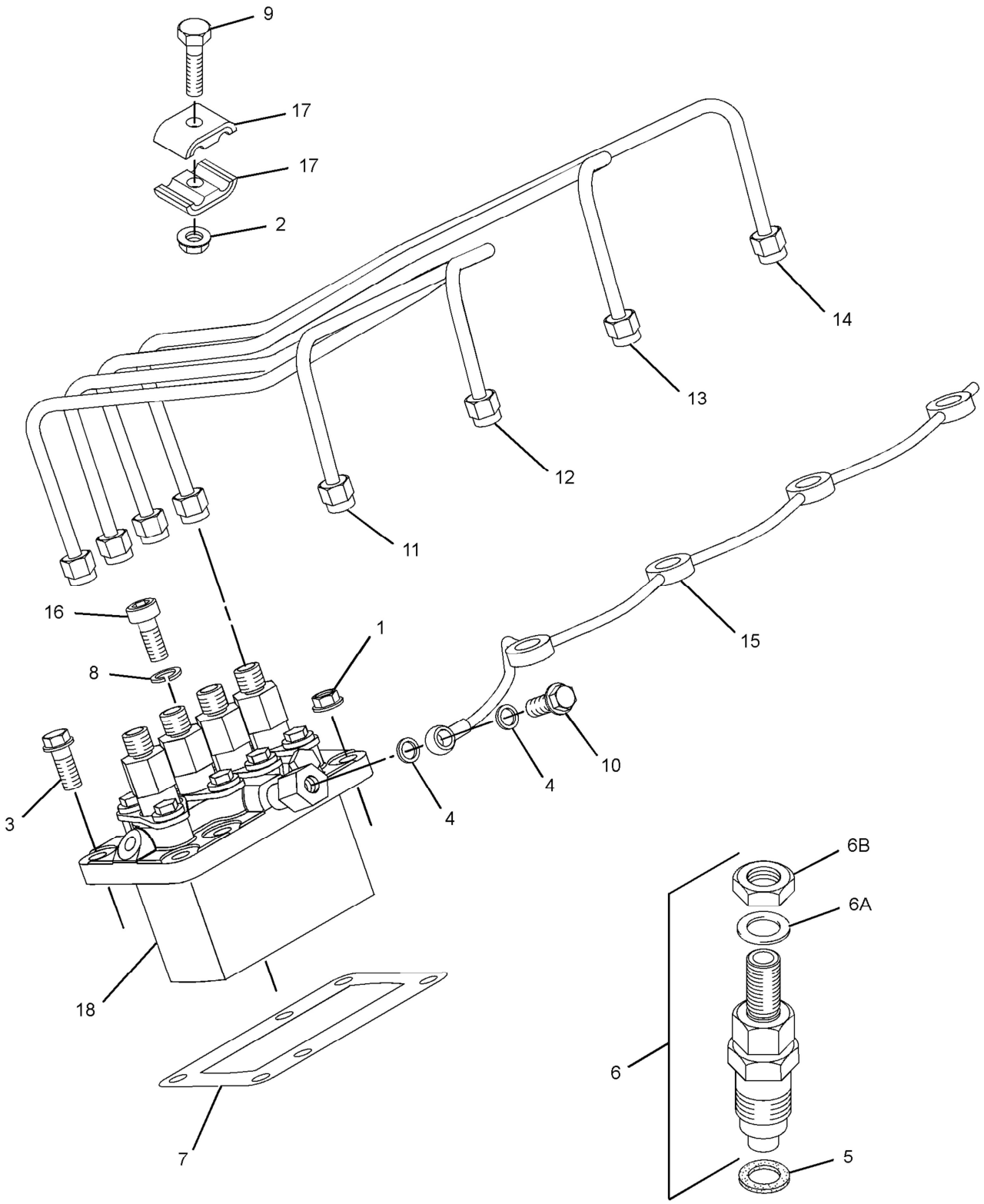

GRAPHIC #1 **<END>** g01418978

FUEL SYSTEM

311-9026 PUMP GP-FUEL INJECTION

SMCS-1251, 1290 **i02847149**

NOTE	REF NO	GRAPHIC REF	PART NUMBER	QTY	PART NAME 1 2 3 4 5 6 (PRODUCT LEVEL)	SEE PAGE
	1	1	**153-5592**	3	NUT	
	2	1	**153-5960**	3	NUT	
	3	1	**154-2713**	2	BOLT	
	4	1	**154-2715**	2	WASHER	
	5	1	**154-2716**	4	SEAL	
	6	1	**154-3018**	4	INJECTOR AS-FUEL	
					(EACH INCLUDES)	
	6A	1	**202-1196**	1	WASHER-SPECIAL	
	6B	1	**205-4731**	1	NUT	
B	7	1	**154-3017**	1	SHIM (0.2-MM THK)	
B			**302-7822**	1	SHIM (0.25-MM THK)	
B			**160-3555**	1	SHIM (0.3-MM THK)	
B			**302-7823**	1	SHIM (0.35-MM THK)	
B			**160-3556**	1	SHIM (0.4-MM THK)	
B			**160-3557**	1	SHIM (0.5-MM THK)	
B			**160-3558**	1	SHIM (0.5-MM THK)	
	8	1	**163-5372**	1	WASHER (8X15.4X4-MM THK)	
	9	1	**183-3353**	3	BOLT	
	10	1	**190-3803**	1	BOLT	
	11	1	**217-2760**	1	TUBE AS (CYL NO. 1)	
	12	1	**217-2761**	1	TUBE AS (CYL NO. 2)	
	13	1	**217-2762**	1	TUBE AS (CYL NO. 3)	
	14	1	**217-2763**	1	TUBE AS (CYL NO. 4)	
	15	1	**311-7561**	1	TUBE	
M	16	1	**8T-4189**	1	BOLT (M8X1.25X20-MM)	
	17	1	**290-8014**	6	CLAMP	
	18	1	**309-6734**	1	PUMP GP-FUEL INJECTION	

B-USE AS REQUIRED
M-METRIC PART

311-9026 **PUMP GP-FUEL INJECTION** *(contd.)* **i02847149**

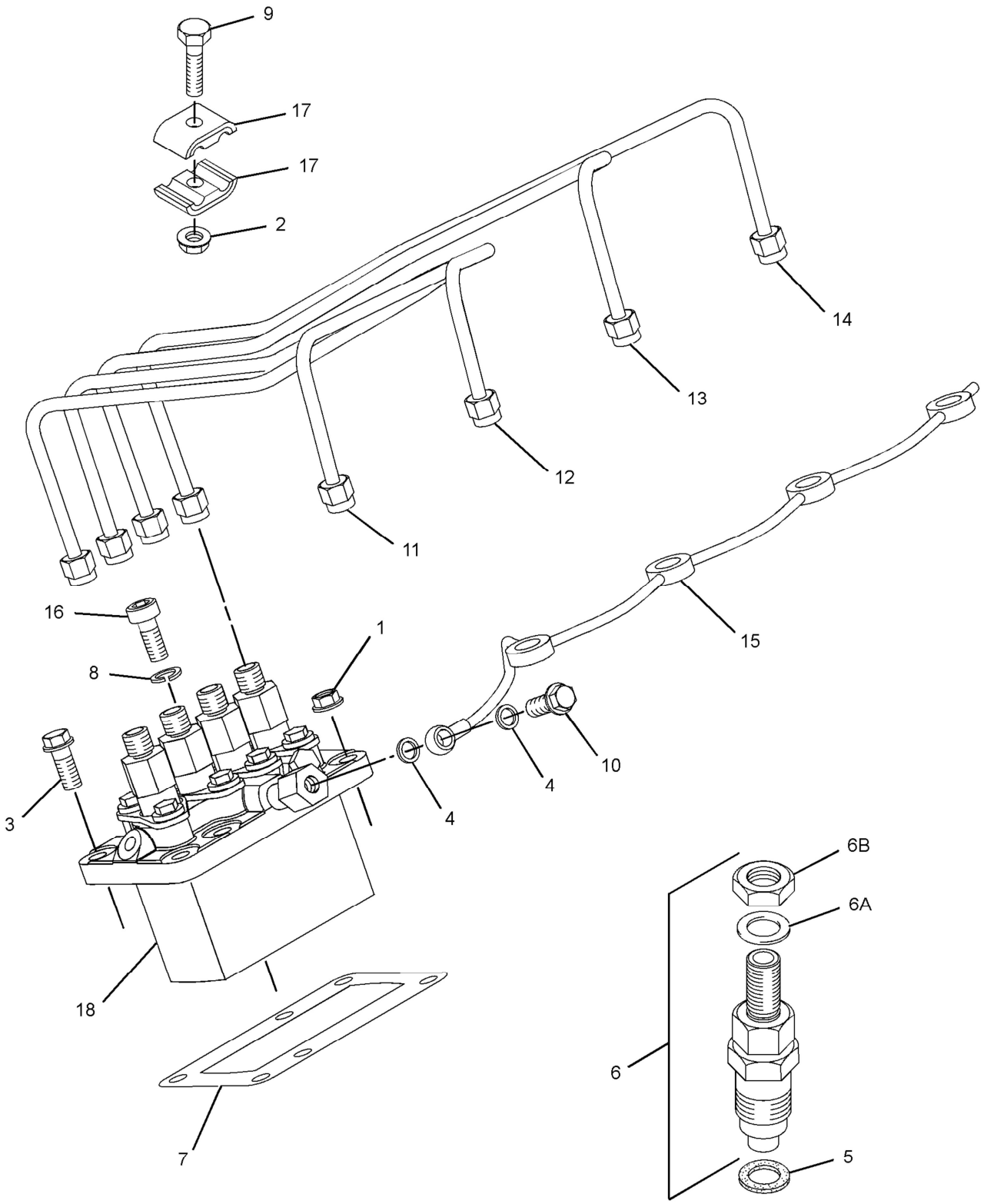

GRAPHIC #1 **<END>** g01418978

FUEL SYSTEM

317-7190 PUMP GP-FUEL INJECTION

SMCS-1251, 1290 **i02853771**

NOTE	PART NUMBER	QTY	PART NAME 1 2 3 4 5 6 (PRODUCT LEVEL)	SEE PAGE
	154-2713	2	BOLT	
	183-3353	3	BOLT	
	190-3803	1	BOLT	
M	**8T-4189**	1	BOLT (M8X1.25X20-MM)	
	290-8014	6	CLAMP	
	154-3018	4	INJECTOR AS-FUEL	
	202-1196	1	WASHER-SPECIAL	
	205-4731	1	NUT	
	153-5592	3	NUT	
	153-5960	3	NUT	
	309-6734	1	PUMP GP-FUEL INJECTION	
	154-2716	4	SEAL	
	154-3017	1	SHIM (0.2-MM THK)	
	160-3555	1	SHIM (0.3-MM THK)	
	160-3556	1	SHIM (0.4-MM THK)	
	160-3557	1	SHIM (0.5-MM THK)	
	160-3558	1	SHIM (0.5-MM THK)	
	302-7822	1	SHIM	
	302-7823	1	SHIM	
	311-7561	1	TUBE	
	217-2760	1	TUBE AS (CYL NO. 1)	
	217-2761	1	TUBE AS (CYL NO. 2)	
	217-2762	1	TUBE AS (CYL NO. 3)	
	217-2763	1	TUBE AS (CYL NO. 4)	
	154-2715	2	WASHER	
	163-5372	1	WASHER (8X15.4X4-MM THK)	

M-METRIC PART

<END>

325-5665 PUMP GP-FUEL INJECTION

SMCS-1251, 1290 **i02962228**

NOTE	REF NO	GRAPHIC REF	PART NUMBER	QTY	PART NAME 1 2 3 4 5 6 (PRODUCT LEVEL)	SEE PAGE
	1	1	**153-5592**	3	NUT	
	2	1	**153-5960**	3	NUT	
	3	1	**154-2713**	2	BOLT	
	4	1	**154-2715**	2	WASHER	
	5	1	**154-2716**	4	SEAL	
	6	1	**154-2722**	1	TUBE AS-FUEL INJECTION (CYL NO.1)	
	7	1	**154-2723**	1	TUBE AS-FUEL INJECTION (CYL NO.2)	
	8	1	**154-2724**	1	TUBE AS-FUEL INJECTION (CYL NO.3)	
	9	1	**154-2725**	1	TUBE AS-FUEL INJECTION (CYL NO.4)	
	10	1	**154-3017**	1	SHIM (0.2-MM THK)	
B		1	**160-3555**	1	SHIM (0.3-MM THK)	
B		1	**160-3556**	1	SHIM (0.4-MM THK)	
B		1	**160-3557**	1	SHIM (0.5-MM THK)	
B		1	**160-3558**	1	SHIM (0.5-MM THK)	
B		1	**302-7822**	1	SHIM (0.25-MM THK)	
B		1	**302-7823**	1	SHIM (0.35-MM THK)	
	14	1	**163-5372**	1	WASHER (8X15.4X4-MM THK)	
	15	1	**183-3353**	3	BOLT	
	16	1	**190-3803**	1	BOLT	
	17	1	**233-0584**	4	INJECTOR AS-FUEL	
M	18	1	**8T-4189**	1	BOLT (M8X1.25X20-MM)	
	19	1	**290-8014**	6	CLAMP	
Y	22	1	**306-6346**	1	PUMP GP-FUEL INJECTION	187
	23	1	**311-7561**	1	TUBE	

B-USE AS REQUIRED
M-METRIC PART
Y-SEPARATE ILLUSTRATION

325-5665 **PUMP GP-FUEL INJECTION** *(contd.)* **i02962228**

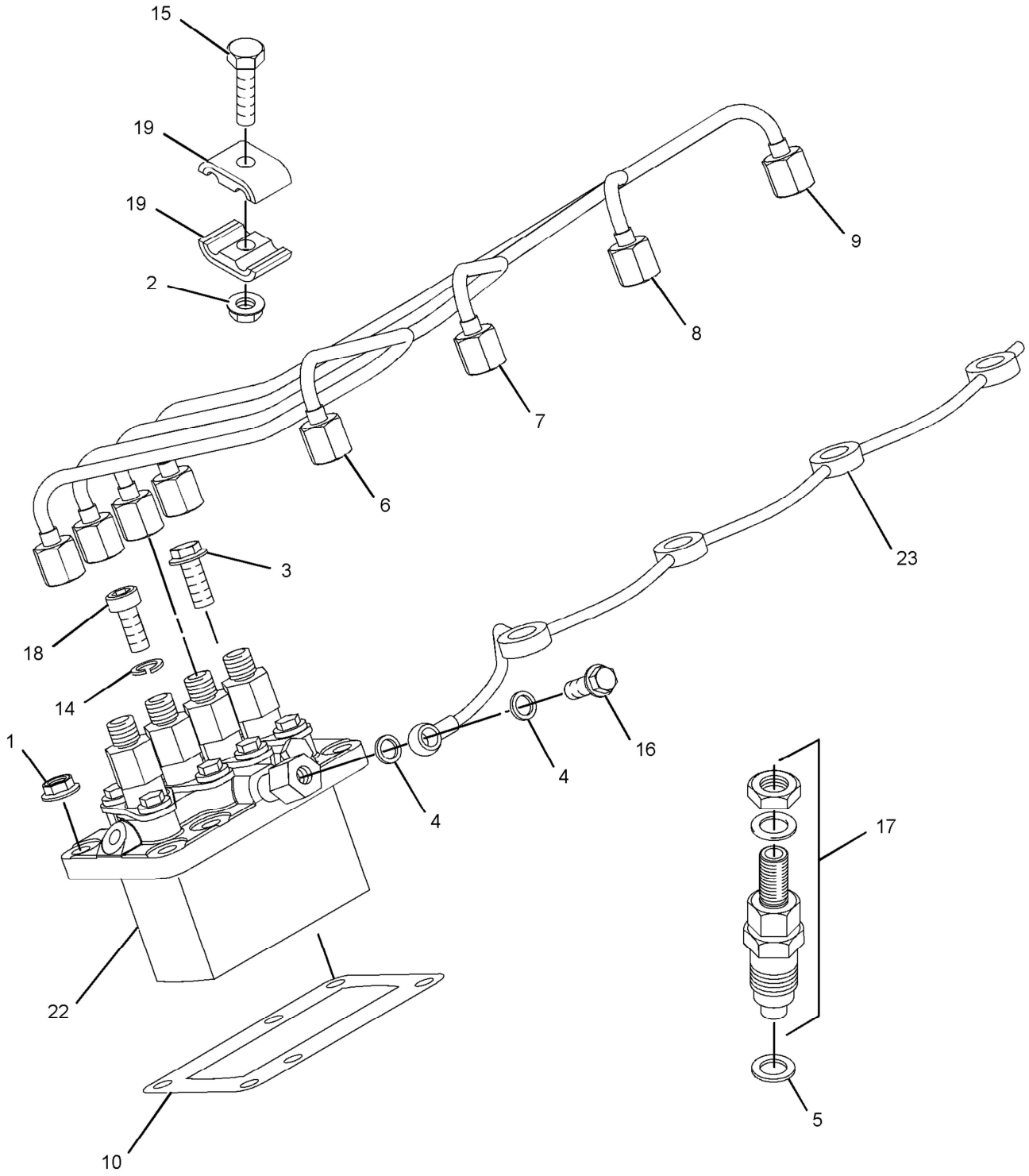

GRAPHIC #1 **<END>** g01541653

328-3294 PUMP GP-FUEL INJECTION

SMCS-1251, 1290 **i03103845**

NOTE	REF NO	GRAPHIC REF	PART NUMBER	QTY	PART NAME 1 2 3 4 5 6 (PRODUCT LEVEL)	SEE PAGE
	1	1	**153-5592**	3	NUT	
	2	1	**153-5960**	3	NUT	
	3	1	**154-2713**	2	BOLT	
	4	1	**154-2715**	2	WASHER	
	5	1	**154-2716**	4	SEAL	
B	6	1	**154-3017**	1	SHIM (0.2-MM THK)	
B		1	**160-3555**	1	SHIM (0.3-MM THK)	
B		1	**160-3556**	1	SHIM (0.4-MM THK)	
B		1	**160-3557**	1	SHIM (0.5-MM THK)	
B		1	**160-3558**	1	SHIM (0.5-MM THK)	
B		1	**302-7822**	1	SHIM (0.25-MM THK)	
B		1	**302-7823**	1	SHIM (0.35-MM THK)	
	7	1	**163-5372**	1	WASHER (8X15.4X4-MM THK)	
	8	1	**183-3353**	3	BOLT	
	9	1	**190-3803**	1	BOLT	
	10	1	**217-2760**	1	TUBE AS (CYL NO. 1)	
	11	1	**217-2761**	1	TUBE AS (CYL NO. 2)	
	12	1	**217-2762**	1	TUBE AS (CYL NO. 3)	
	13	1	**217-2763**	1	TUBE AS (CYL NO. 4)	
M	14	1	**8T-4189**	1	BOLT (M8X1.25X20-MM)	
	15	1	**290-8014**	6	CLAMP	
	16	1	**308-1905**	1	PUMP-FUEL INJECTION	
	17	1	**308-1906**	4	ATOMIZER	
					(EACH INCLUDES)	
	17A	1	**202-1196**	1	WASHER-SPECIAL	
	18	1	**311-7561**	1	TUBE	

B-USE AS REQUIRED
M-METRIC PART

328-3294 **PUMP GP-FUEL INJECTION** *(contd.)* **i03103845**

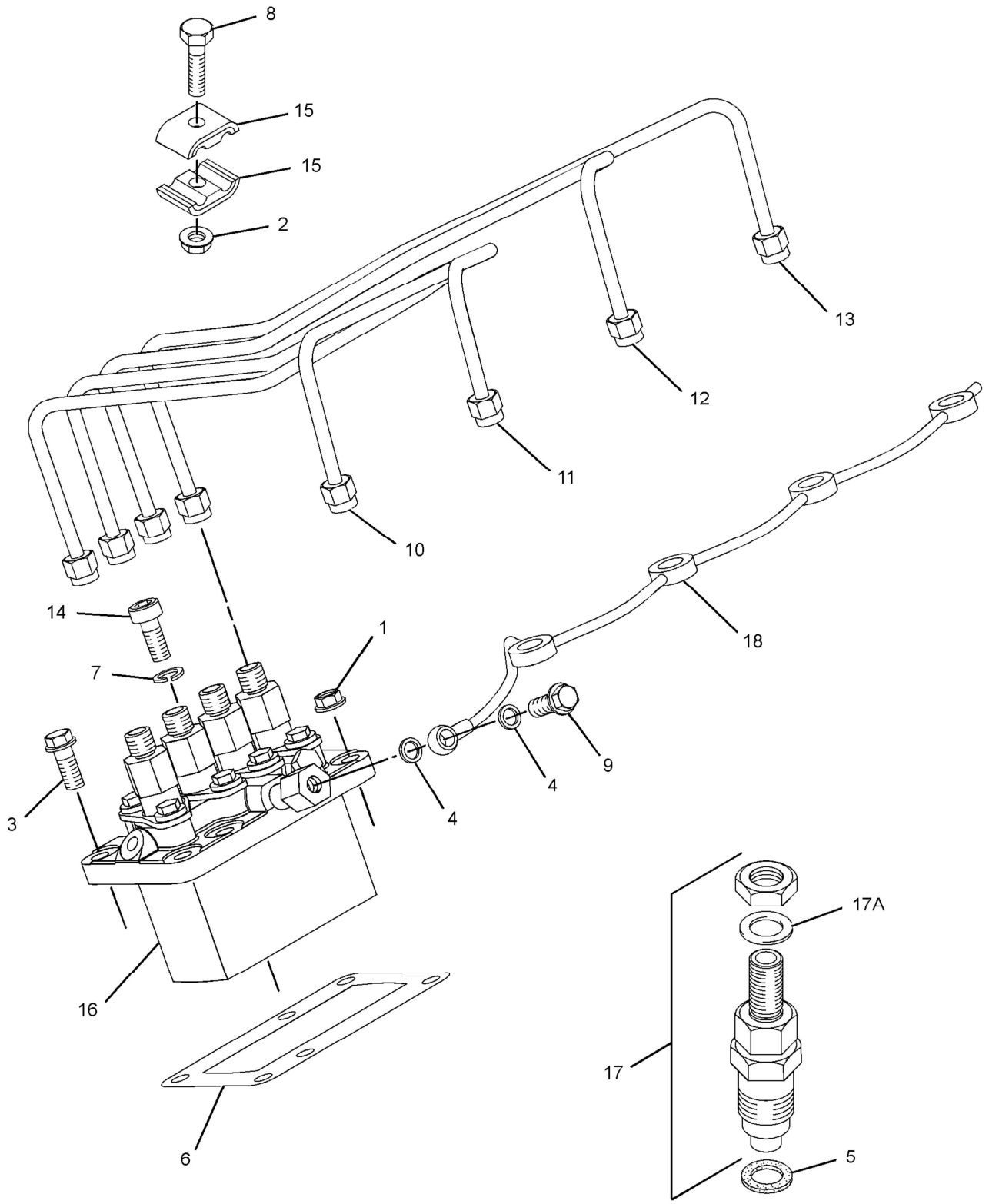

GRAPHIC #1 **<END>** g01662335

FUEL SYSTEM

308-2320 PUMP GP-FUEL PRIMING

SMCS-1258 **i02752320**

NOTE	REF NO	GRAPHIC REF	PART NUMBER	QTY	PART NAME 1 2 3 4 5 6 (PRODUCT LEVEL)	SEE PAGE
	1	1	**197-8540**	1	PUMP GP-FUEL PRIMING	

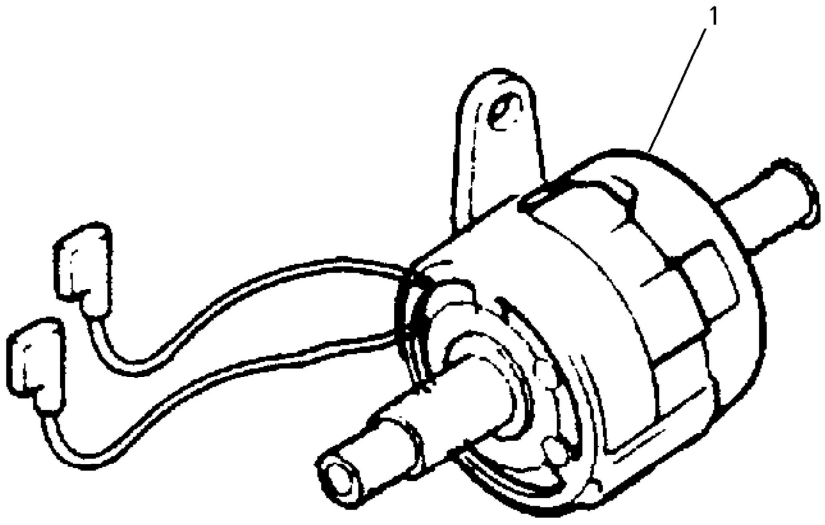

GRAPHIC #1 **<END>** g00758447

FUEL SYSTEM

317-6706 PUMP GP-FUEL PRM & PRIM FILTER

SMCS-1258, 1260 **i03253905**

NOTE	REF NO	GRAPHIC REF	PART NUMBER	QTY	PART NAME 1 2 3 4 5 6 (PRODUCT LEVEL)	SEE PAGE
	1	1	**276-1804**	1	FILTER GP-FUEL (WATER SEPARATOR)	
	1A	1	**276-1806**	1	FILTER ELEMENT-FUEL	
	1B	1	**302-7776**	1	BOWL-FUEL FILTER	
	1C	1	**302-7777**	3	PLUG-DRAIN (WATER SEPARATOR)	
	1D	1	**302-7778**	1	SEAL	
	2	1	**197-8540**	1	PUMP GP-FUEL PRIMING	

317-6706 **PUMP GP-FUEL PRM & PRIM FILTER** *(contd.)* **i03253905**

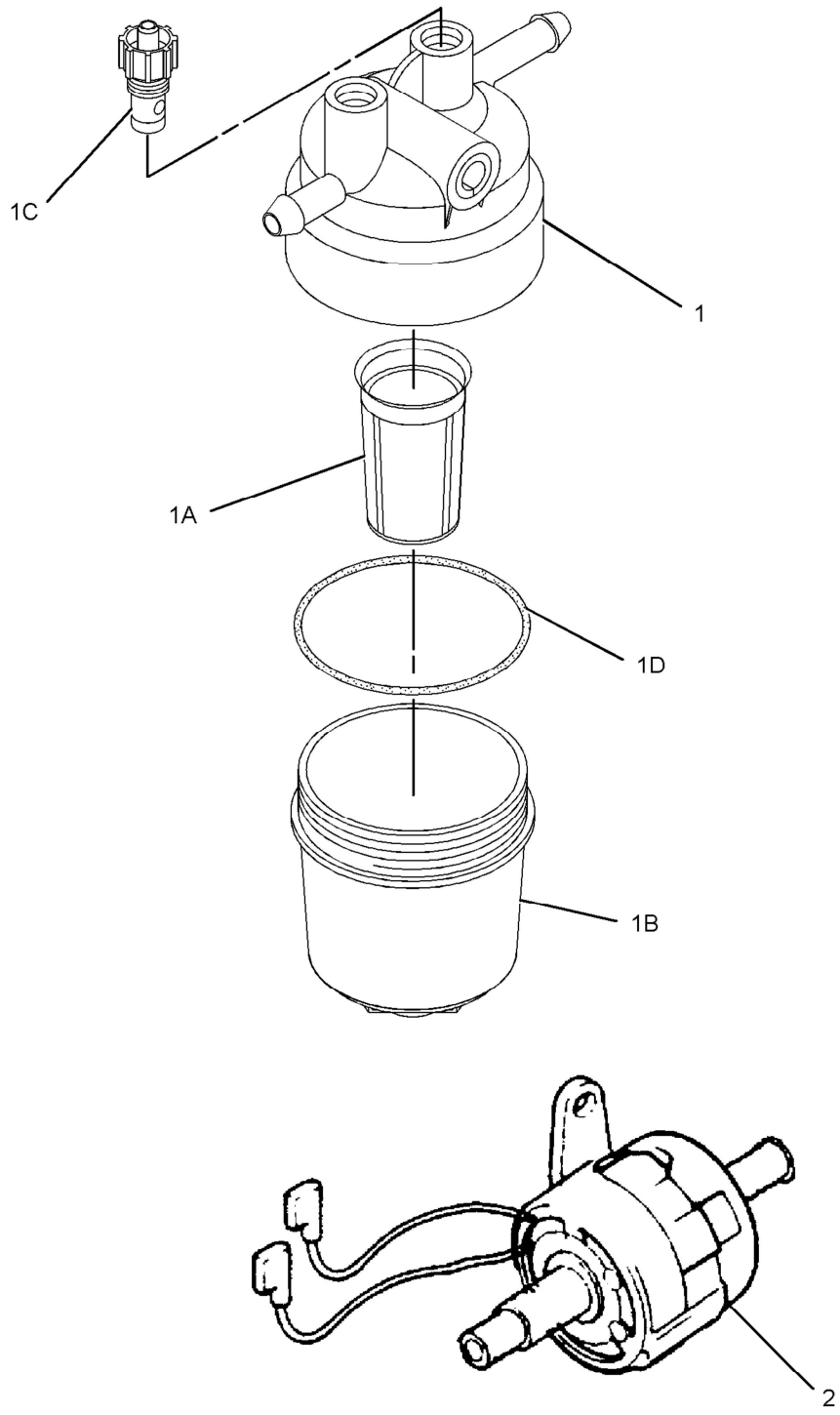

GRAPHIC #1 **<END>** g01620535

FUEL SYSTEM

311-9028 PUMP GP-FUEL TRANSFER

SMCS-1256 **i02941472**

NOTE	REF NO	GRAPHIC REF	PART NUMBER	QTY	PART NAME 1 2 3 4 5 6 (PRODUCT LEVEL)	SEE PAGE
	1	1	**7W-4694**	1	PLUG	
	2	1	**033-7849**	2	PLUG	
	3	1	**033-7854**	1	FILTER AS-FUEL	
	3A	1	**067-6987**	1	KIT-ELEMENT (FUEL FILTER)	
	3B	1	**6F-4855**	1	SEAL-O-RING	
	3C	1	**069-2922**	2	GASKET (FUEL FILTER)	
	4	1	**067-6269**	3	FERRULE	
	5	1	**067-6317**	1	WASHER (0.4X0.566X0.04-IN THK)	
	7	1	**138-7162**	2	BOLT	
	8	2	**153-5592**	1	NUT	
	9	2	**153-6838**	2	BOLT	
	10	1	**154-1399**	2	WASHER	
	11	1	**154-2403**	2	WASHER	
	12	1,2	**155-7984**	1	WASHER	
	13	1	**155-8085**	2	NUT	
	14	1	**160-3550**	2	CLAMP-HOSE	
	15	1,2	**168-9001**	2	BOLT	
	16	2	**183-4036**	1	CONNECTOR	
	17	2	**183-4320**	1	PUMP AS-FUEL TRANSFER	
	18	2	**183-4321**	1	BRACKET	
	19	2	**183-4323**	1	COVER	
	20	2	**215-2606**	1	GASKET	
	21	1	**218-2355**	1	LINE-FUEL	
	22	1	**234-9556**	1	HOSE-FUEL	
	23	2	**243-6411**	1	FILTER AS-FUEL	
	24	1	**302-4187**	1	TUBE	
	25	1	**311-1174**	1	BRACKET	
	26	1	**311-9048**	1	WASHER	

311-9028 **PUMP GP-FUEL TRANSFER** *(contd.)* **i02941472**

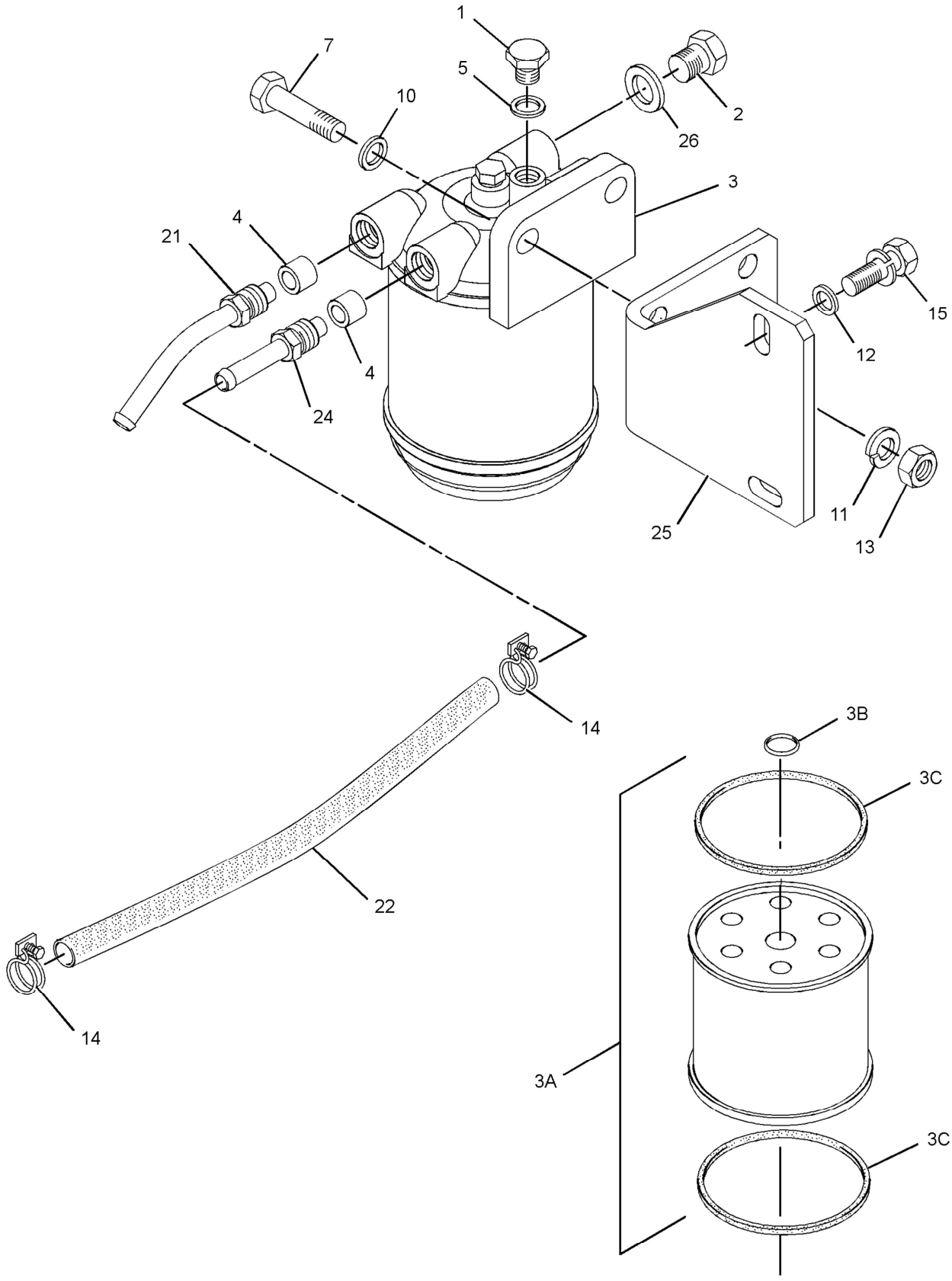

GRAPHIC #1 g01418528

311-9028 **PUMP GP-FUEL TRANSFER** *(contd.)* **i02941472**

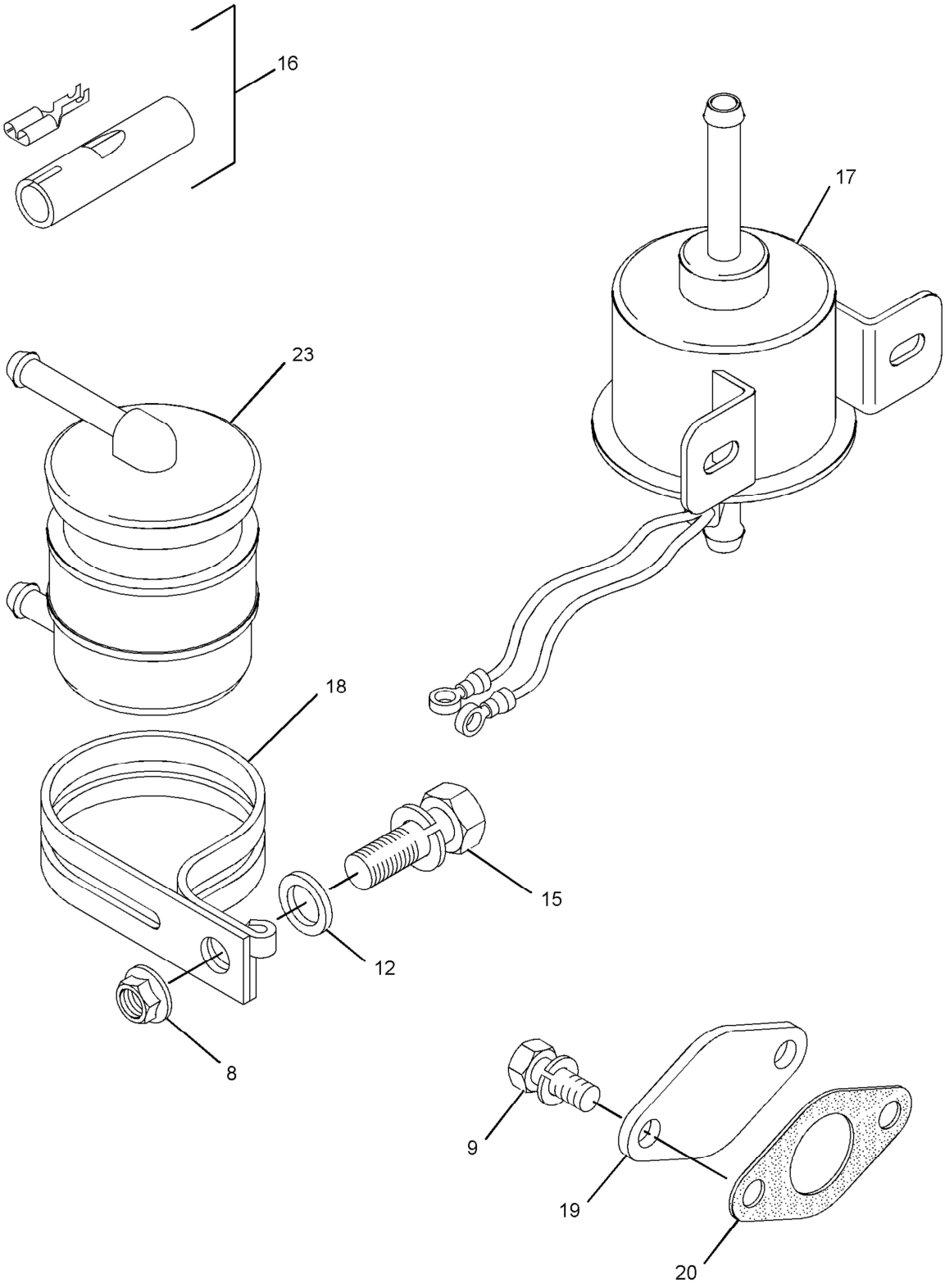

GRAPHIC #2 **<END>** g01419064

325-5670 PUMP GP-FUEL TRANSFER

SMCS-1256 **i02962218**

NOTE	REF NO	GRAPHIC REF	PART NUMBER	QTY	PART NAME 1 2 3 4 5 6 (PRODUCT LEVEL)	SEE PAGE
	1	1	**153-5592**	1	NUT	
	2	1	**153-6838**	2	BOLT	
	3	1	**155-7984**	2	WASHER	
	4	1	**165-2141**	2	BOLT	
	5	1	**183-4320**	1	PUMP AS-FUEL TRANSFER	
	6	1	**183-4321**	1	BRACKET	
	7	1	**183-4323**	1	COVER	
	8	1	**215-2606**	1	GASKET	
	9	1	**243-6411**	1	FILTER AS-FUEL	
	10	1	**183-4036**	1	CONNECTOR	

325-5670 **PUMP GP-FUEL TRANSFER** *(contd.)* **i02962218**

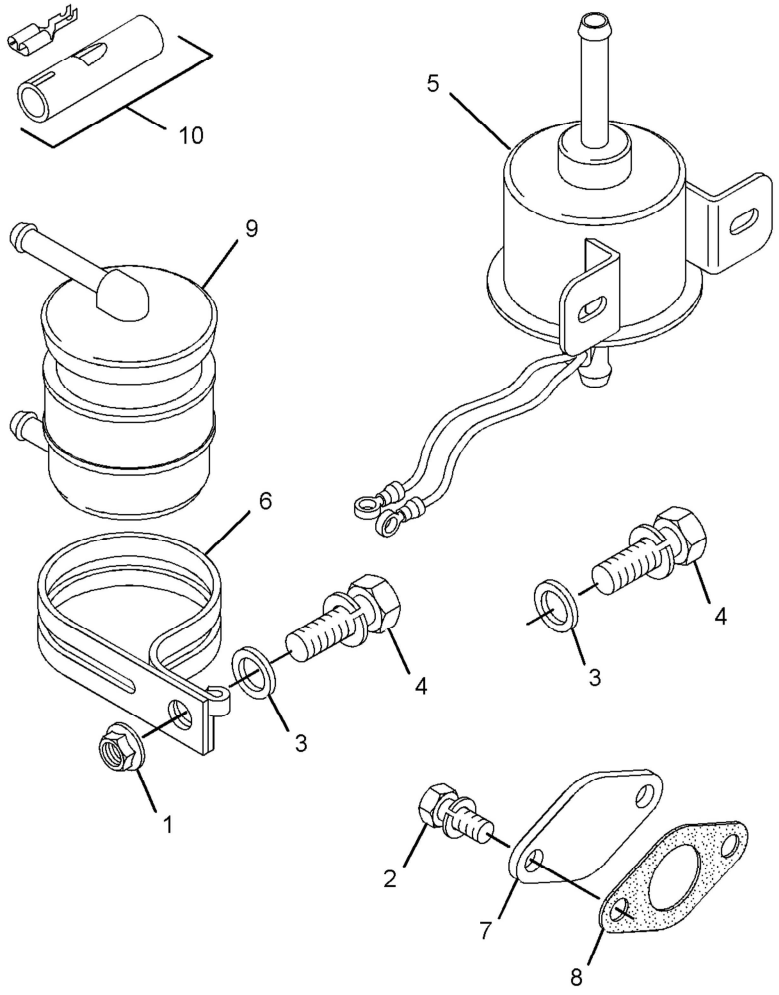

GRAPHIC #1 **<END>** g01538616

FUEL SYSTEM

327-7633 PUMP GP-FUEL TRANSFER

SMCS-1256 **i03124521**

NOTE	REF NO	GRAPHIC REF	PART NUMBER	QTY	PART NAME 1 2 3 4 5 6 (PRODUCT LEVEL)	SEE PAGE
	1	1	**6I-0846**	2	BOLT (M6X1X14-MM)	
	2	1	**7W-4694**	1	PLUG	
	3	1	**033-7849**	2	PLUG	
	4	1	**033-7854**	1	FILTER AS-FUEL	
	5	1	**067-6269**	2	FERRULE	
	6	1	**067-6317**	1	WASHER (0.4X0.566X0.04-IN THK)	
	7	1	**067-6987**	1	KIT-ELEMENT (FUEL FILTER)	
	7A	1	**6F-4855**	2	SEAL-O-RING	
	7B	1	**069-2922**	2	GASKET	
	8	1	**138-7162**	2	BOLT	
	9	1	**154-1399**	2	WASHER	
	10	1	**154-2403**	2	WASHER	
	11	1	**155-8085**	2	NUT	
	12	1	**176-7719**	1	SEAL-O-RING	
	13	1	**218-2355**	1	LINE-FUEL	
	14	1	**223-8182**	1	BRACKET	
	15	1	**295-4070**	1	PUMP AS-FUEL TRANSFER	
	16	1	**302-4187**	1	TUBE	
	17	1	**311-9048**	1	WASHER	

327-7633 **PUMP GP-FUEL TRANSFER** *(contd.)* **i03124521**

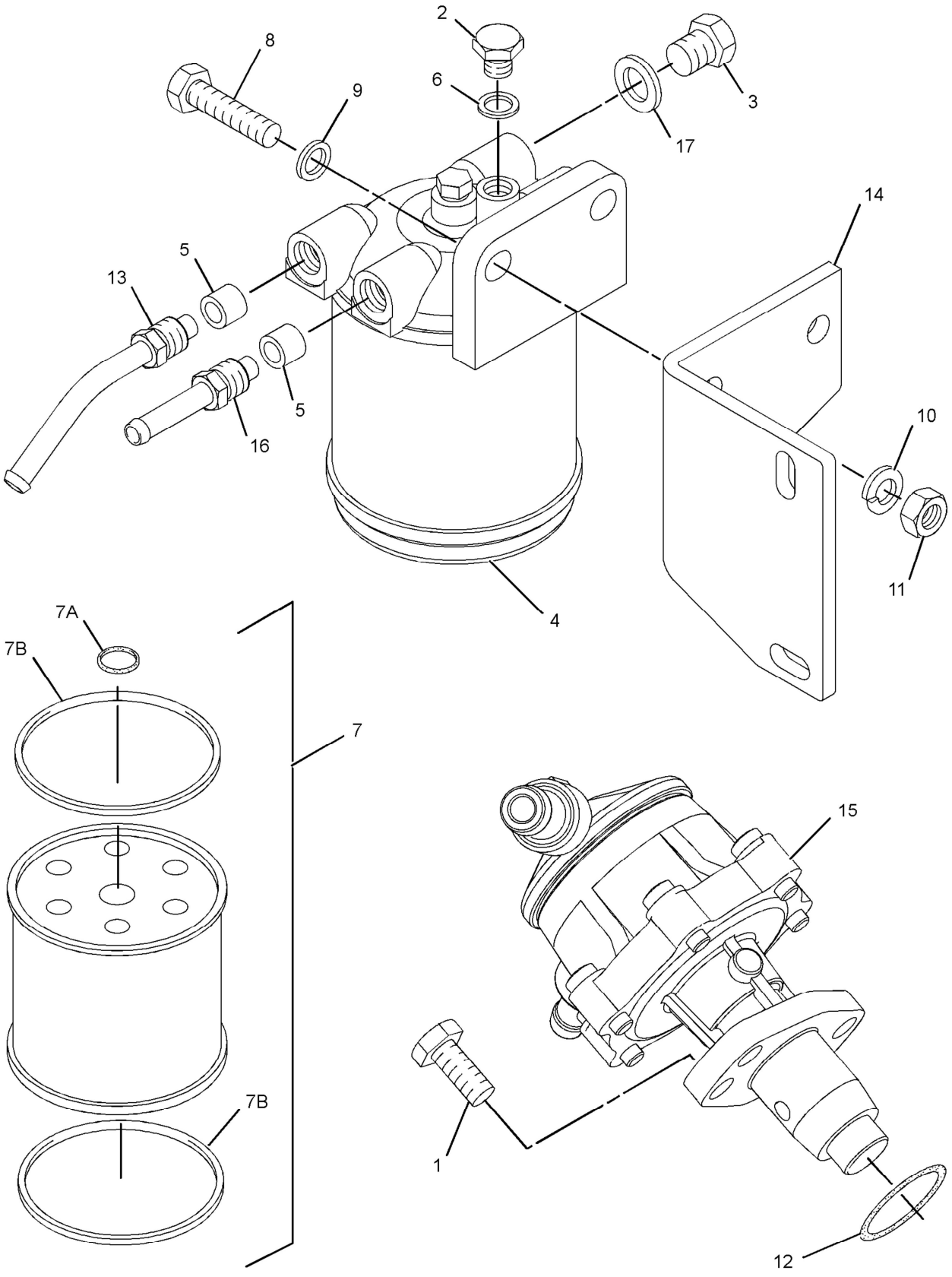

GRAPHIC #1 **<END>** g01660853

FUEL SYSTEM

328-1882 PUMP GP-FUEL TRANSFER

SMCS-1256 **i03103510**

NOTE	REF NO	GRAPHIC REF	PART NUMBER	QTY	PART NAME 1 2 3 4 5 6 (PRODUCT LEVEL)	SEE PAGE
	1	1	**7W-4694**	1	PLUG	
	2	1	**033-7849**	2	PLUG	
	3	1	**033-7854**	1	FILTER AS-FUEL	
	4	1	**067-6269**	2	FERRULE	
	5	1	**067-6317**	1	WASHER (0.4X0.566X0.04-IN THK)	
	6	1	**067-6987**	1	KIT-ELEMENT (FUEL FILTER)	
	6A	1	**6F-4855**	2	SEAL-O-RING	
	6B	1	**069-2922**	2	GASKET (FUEL FILTER)	
	7	1	**138-7162**	2	BOLT	
	8	1	**153-5592**	1	NUT	
	9	1	**154-1399**	2	WASHER	
	10	1	**154-2403**	2	WASHER	
	11	1	**155-7984**	3	WASHER	
	12	1	**155-8085**	2	NUT	
	13	1	**160-3550**	2	CLAMP-HOSE	
	14	1	**165-2141**	2	BOLT	
	15	1	**168-9001**	1	BOLT	
	16	1	**183-4320**	1	PUMP AS-FUEL TRANSFER	
	17	1	**183-4321**	1	BRACKET	
	18	1	**223-8182**	1	BRACKET	
	19	1	**234-9556**	1	HOSE-FUEL	
	20	1	**243-6411**	1	FILTER AS-FUEL	
	21	1	**302-4187**	2	TUBE	
	22	1	**311-9048**	1	WASHER	
	23	1	**183-4036**	1	CONNECTOR	

328-1882 **PUMP GP-FUEL TRANSFER** *(contd.)* **i03103510**

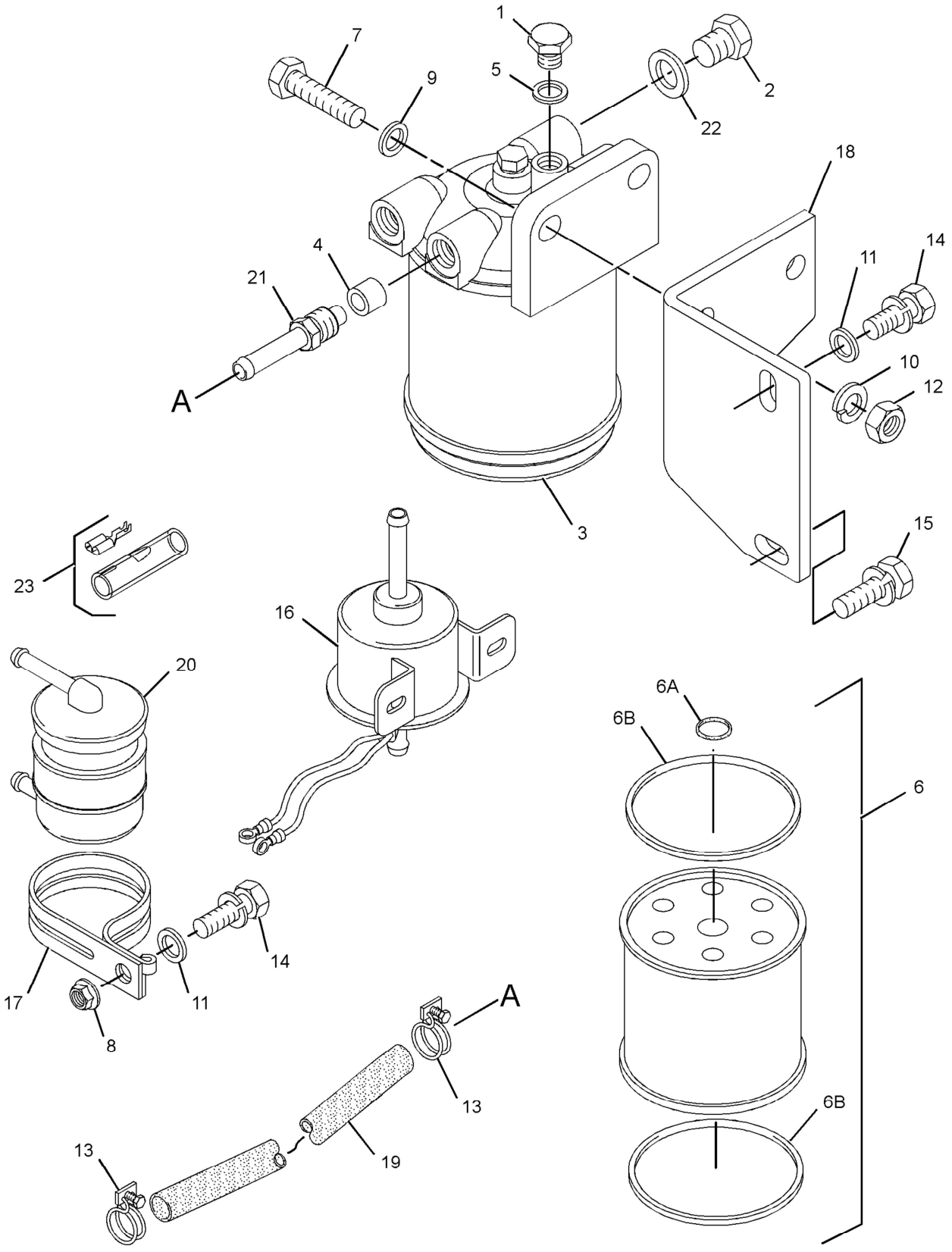

GRAPHIC #1 **<END>** g01661074

ELECTRICAL AND STARTING SYSTEM

308-2305 ALTERNATOR GP-CHARGING

SMCS-1405 **i02752277**

NOTE	REF NO	GRAPHIC REF	PART NUMBER	QTY	PART NAME 1 2 3 4 5 6 (PRODUCT LEVEL)	SEE PAGE
	1	1	**100-8451**	1	BOLT	
	2	1	**153-5592**	1	NUT	
	3	1	**155-7984**	1	WASHER	
	4	1	**165-2141**	3	BOLT	
	5	1	**168-8999**	1	LEVER-ADJUSTING	
	6	1	**168-9001**	2	BOLT	
	7	1	**168-9002**	1	WASHER	
	8	1	**246-4267**	1	BRACKET	
	9	1	**305-3660**	1	ALTERNATOR GP-CHARGING	

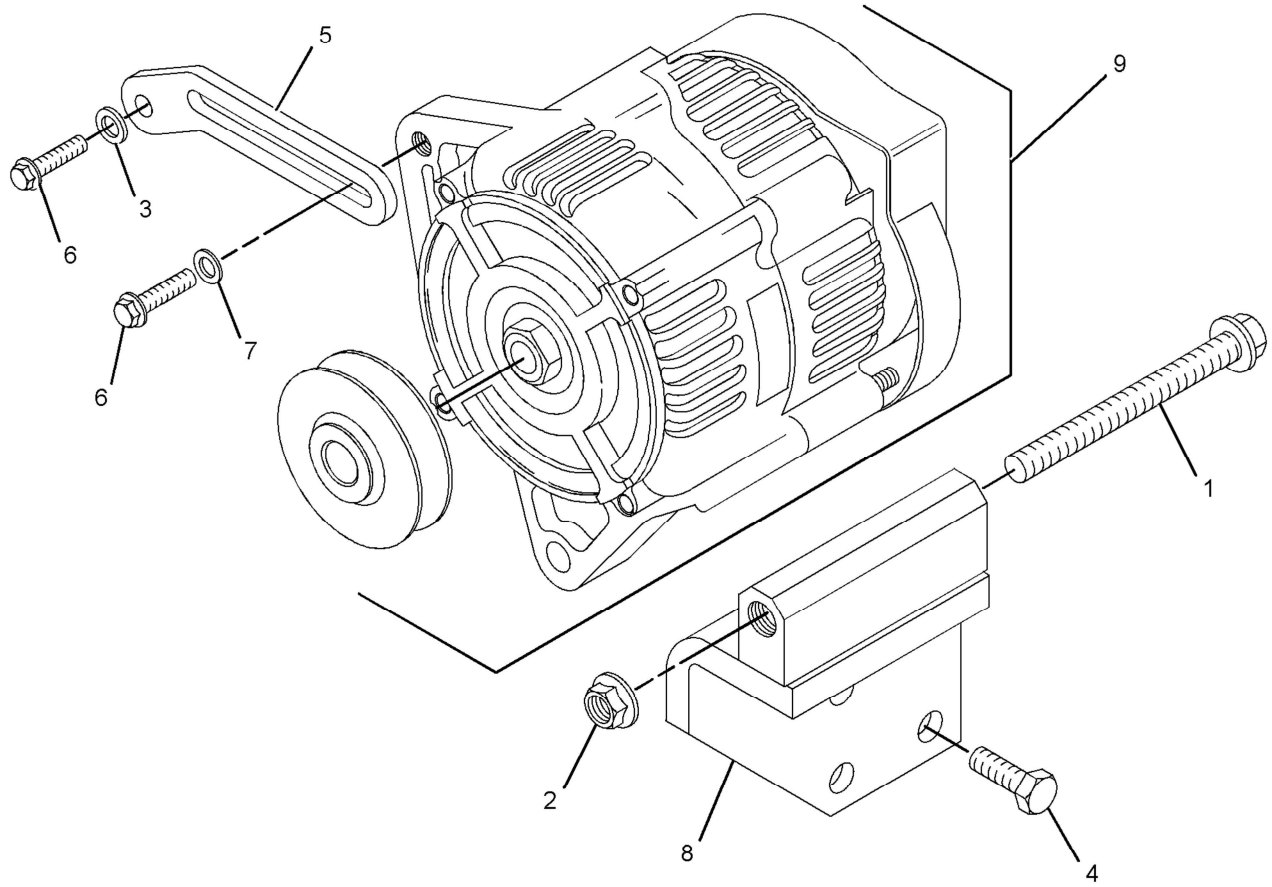

GRAPHIC #1 **<END>** g01397418

ELECTRICAL AND STARTING SYSTEM

317-3038 ALTERNATOR GP-CHARGING

SMCS-1405 **i02851918**

NOTE	REF NO	GRAPHIC REF	PART NUMBER	QTY	PART NAME 1 2 3 4 5 6 (PRODUCT LEVEL)	SEE PAGE
	1	1	**100-8451**	1	BOLT	
	2	1	**153-5592**	1	NUT	
	3	1	**155-7984**	1	WASHER	
	4	1	**165-2141**	3	BOLT	
	5	1	**168-9001**	2	BOLT	
	6	1	**168-9002**	1	WASHER	
	7	1	**225-3146**	1	ALTERNATOR GP-CHARGING (24-VOLT)	
	8	1	**233-9531**	1	LEVER-ADJUSTING	
	9	1	**243-4300**	1	PULLEY-ALTERNATOR	
	10	1	**283-4816**	1	BRACKET	

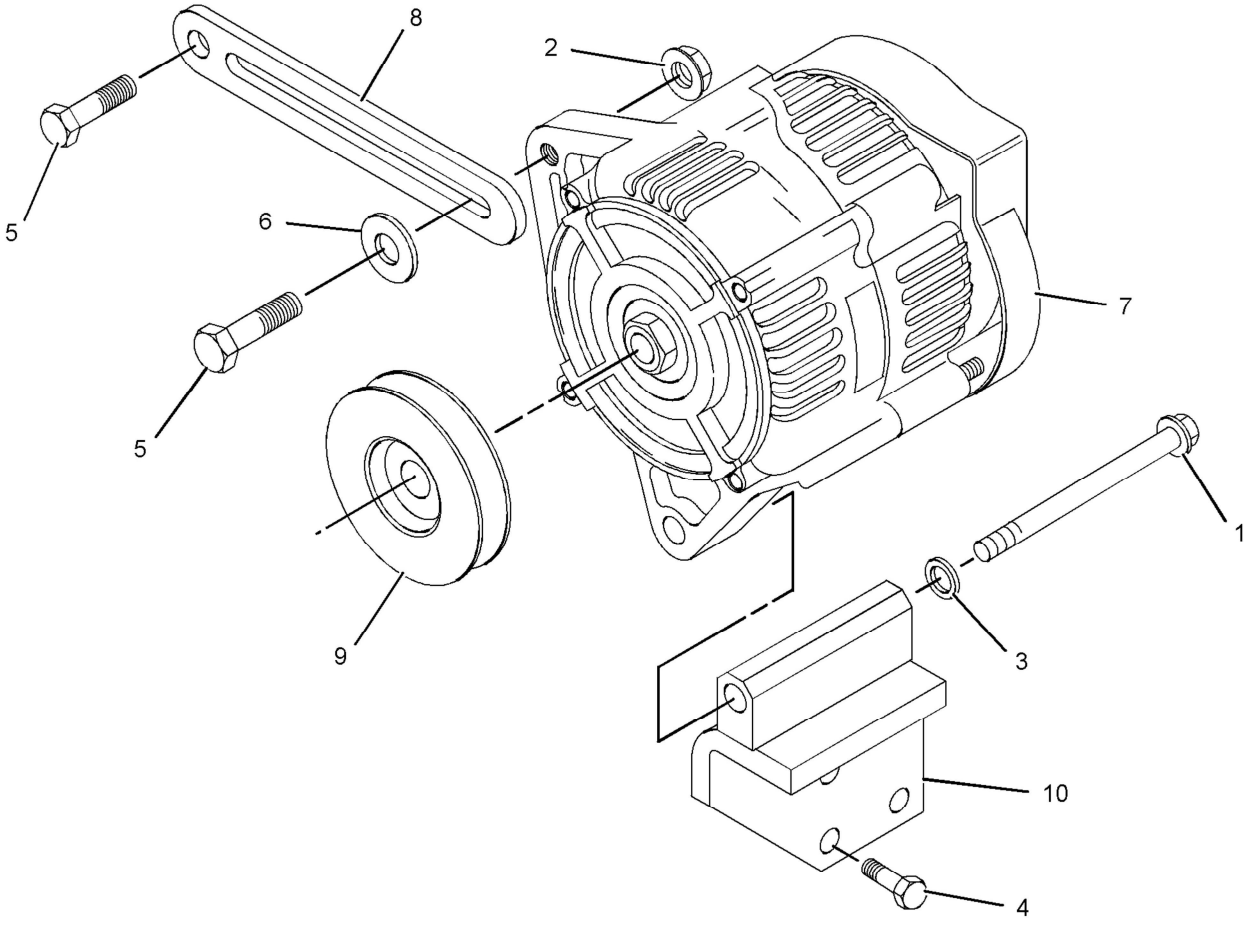

GRAPHIC #1 **<END>** g01229191

308-2319 CONNECTION GP-ELECTRICAL

SMCS-1408 **i02752318**

NOTE	REF NO	GRAPHIC REF	PART NUMBER	QTY	PART NAME 1 2 3 4 5 6 (PRODUCT LEVEL)	SEE PAGE
	1	1	**254-5541**	1	CONNECTION AS	
	2	1	**197-8555**	1	CONNECTION	

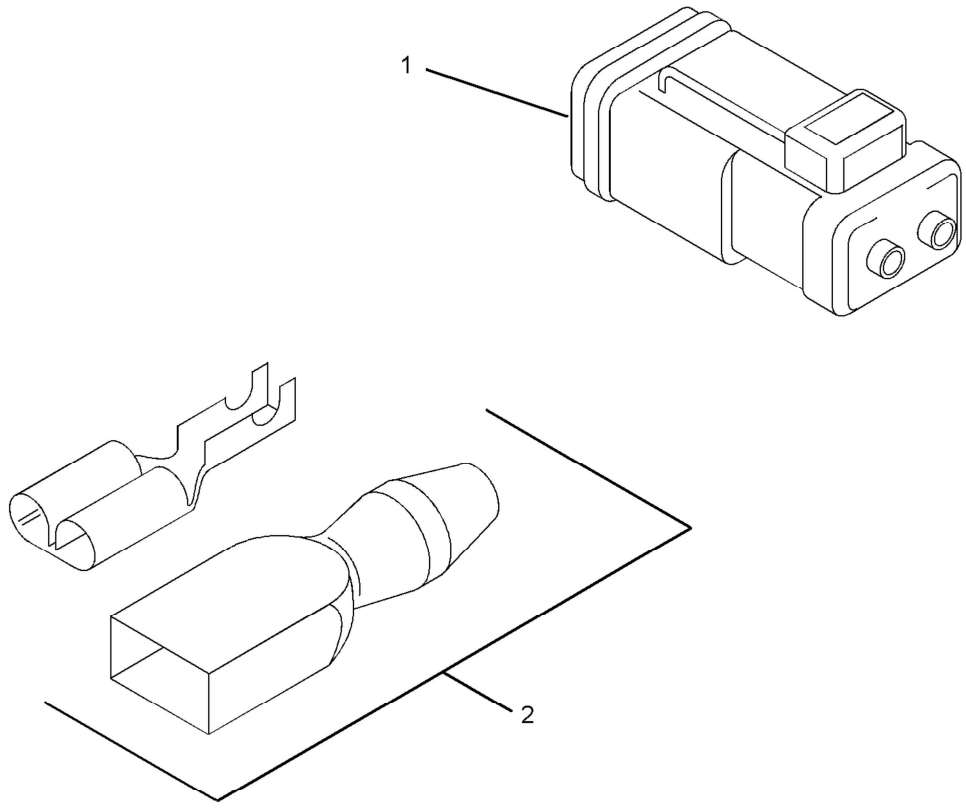

GRAPHIC #1 **<END>** g01389483

ELECTRICAL AND STARTING SYSTEM

321-6741 CONNECTION GP-ELECTRICAL

SMCS-1408 **i02905403**

NOTE	REF NO	GRAPHIC REF	PART NUMBER	QTY	PART NAME 1 2 3 4 5 6 (PRODUCT LEVEL)	SEE PAGE
	1	1	**254-5541**	1	CONNECTION AS	

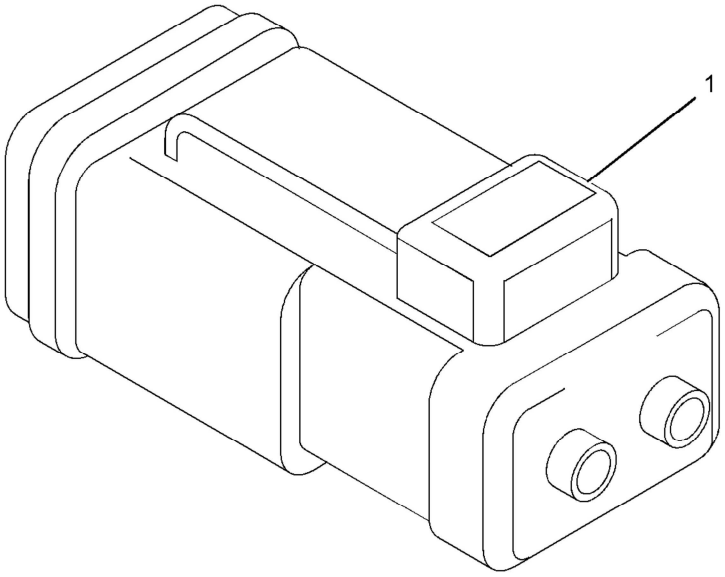

GRAPHIC #1 **<END>** g01513229

308-2313 CONTROL GP-MANUAL START/STOP

SMCS-1426, 7418 **i02912097**

NOTE	REF NO	GRAPHIC REF	PART NUMBER	QTY	PART NAME 1 2 3 4 5 6 (PRODUCT LEVEL)	SEE PAGE
	1	1	**153-6412**	1	WASHER	
	2	1	**324-4598**	1	SOLENOID (FUEL SHUTOFF)	
	3	1	**308-1914**	1	LEVER-CONTROL	

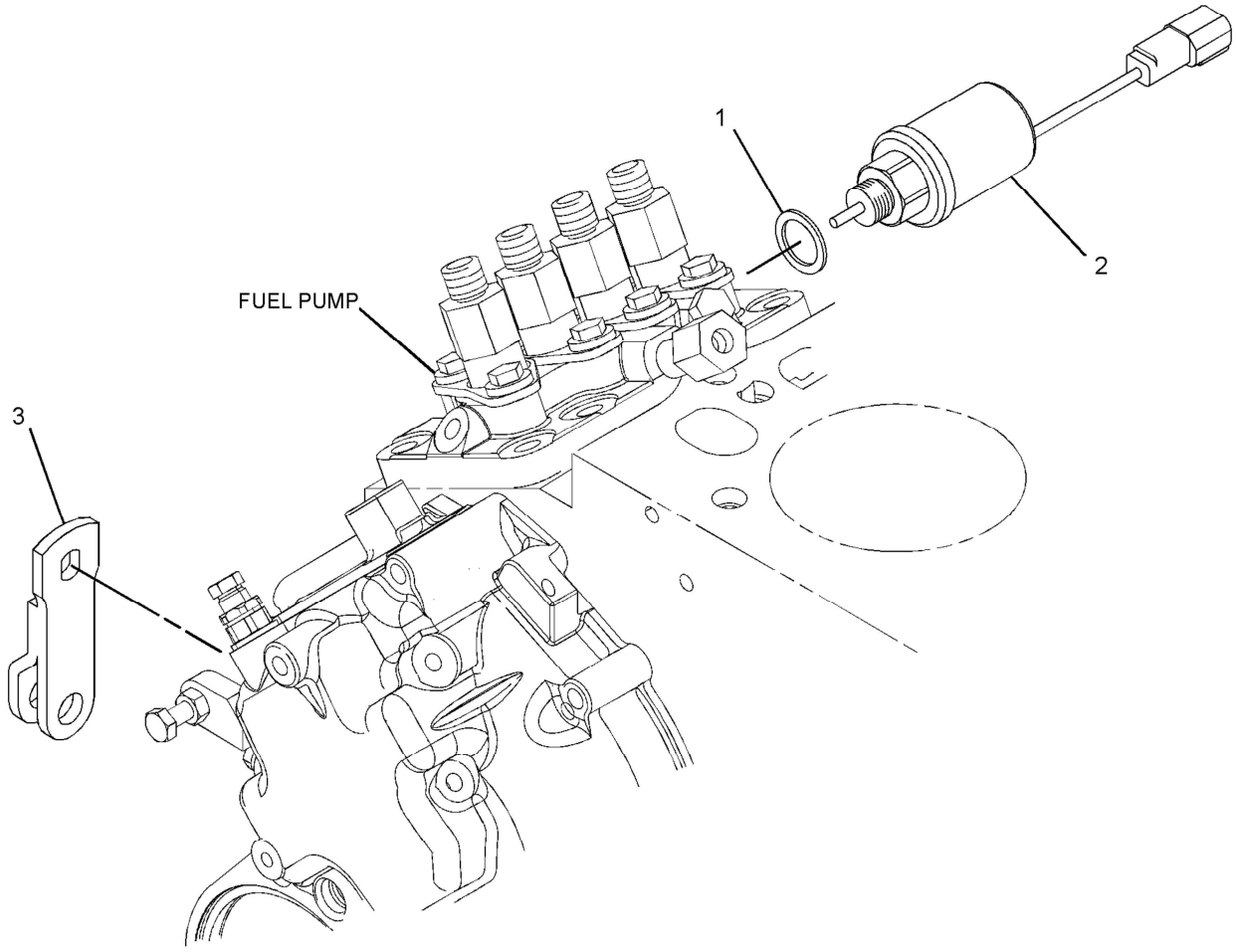

GRAPHIC #1 **<END>** g01420648

317-3041 CONTROL GP-MANUAL START/STOP

SMCS-1426, 7418 **i02851942**

NOTE	REF NO	GRAPHIC REF	PART NUMBER	QTY	PART NAME 1 2 3 4 5 6 (PRODUCT LEVEL)	SEE PAGE
	1	1	**153-6412**	1	WASHER	
	2	1	**275-0493**	1	SOLENOID (FUEL SHUTOFF)	
	3	1	**315-5237**	1	LEVER-CONTROL	

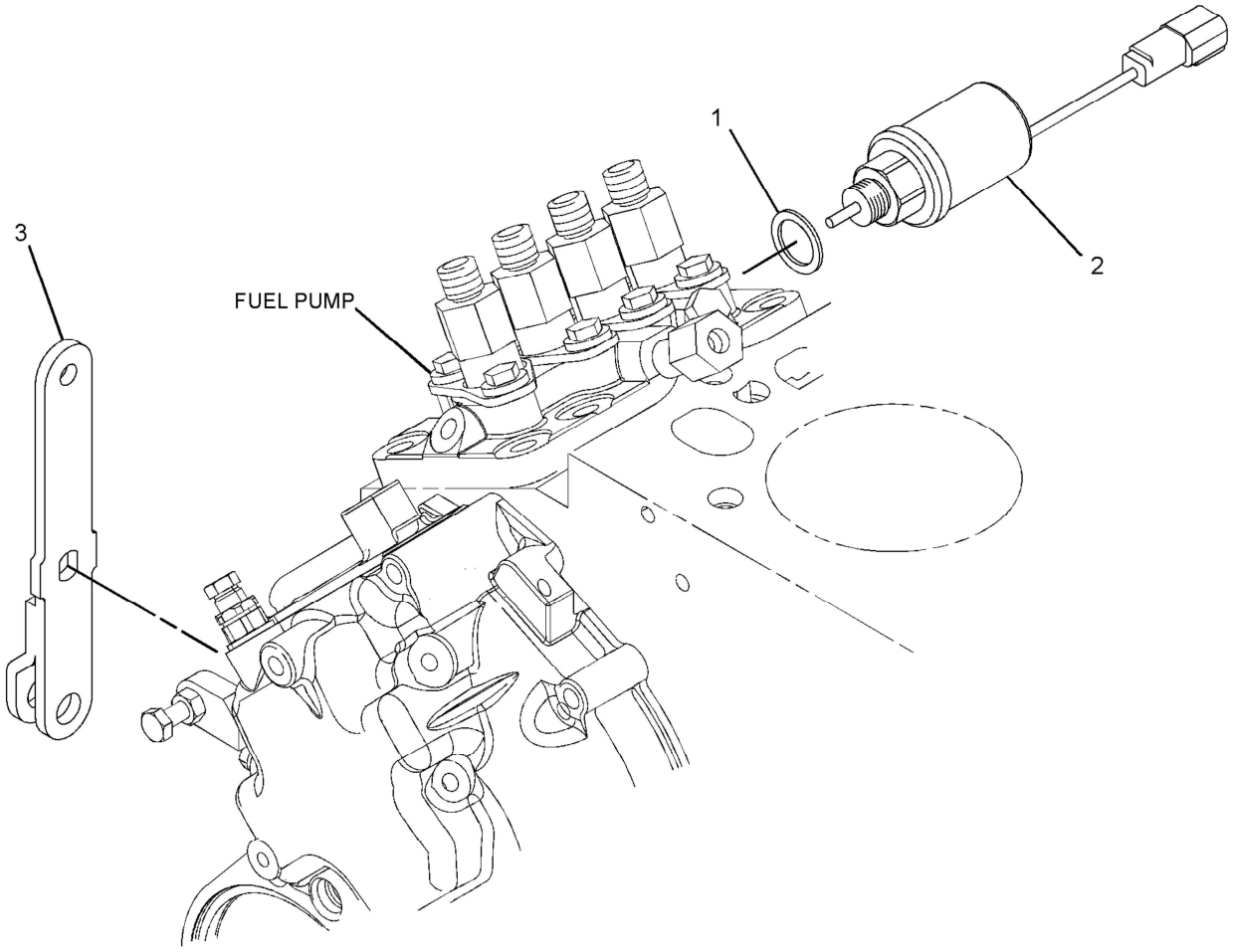

GRAPHIC #1 **<END>** g01421434

331-9611 CONTROL GP-MANUAL START/STOP

SMCS-1426, 7418 **i03135536**

NOTE	REF NO	GRAPHIC REF	PART NUMBER	QTY	PART NAME 1 2 3 4 5 6 (PRODUCT LEVEL)	SEE PAGE
	1	1	**153-6412**	1	WASHER	
	2	1	**275-0493**	1	SOLENOID	
	3	1	**308-1914**	1	LEVER-CONTROL	

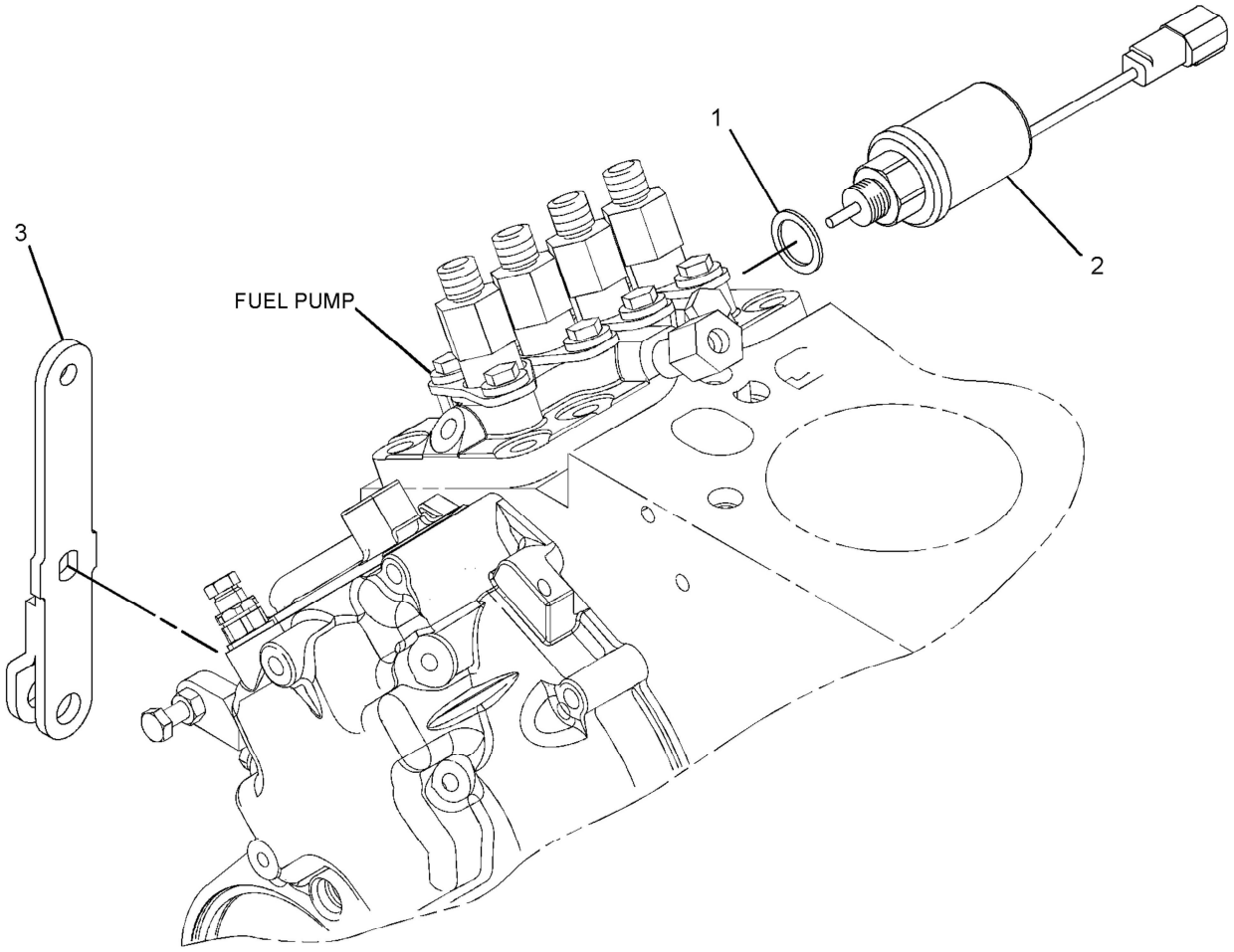

GRAPHIC #1 **<END>** g01641376

ELECTRICAL AND STARTING SYSTEM

308-2311 GLOW PLUG GP

SMCS-1412 **i02752294**

NOTE	REF NO	GRAPHIC REF	PART NUMBER	QTY	PART NAME 1 2 3 4 5 6 (PRODUCT LEVEL)	SEE PAGE
	1	1	**155-8076**	2	NUT	
	2	1	**155-8077**	2	WASHER	
	3	1	**172-4585**	4	GLOW PLUG	
	4	1	**154-1935**	1	SUPPORT-PLUG	

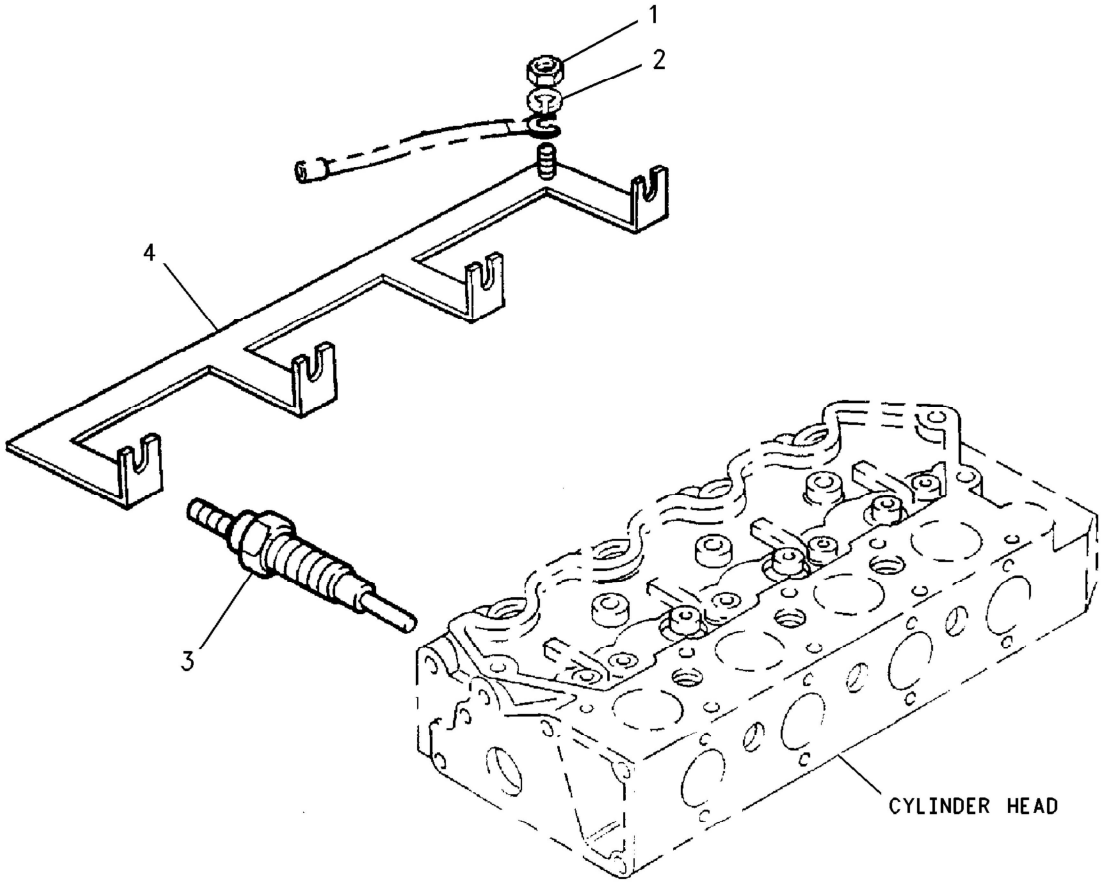

GRAPHIC #1 **<END>** g00708690

317-3040 GLOW PLUG GP

SMCS-1412 **i02851933**

NOTE	REF NO	GRAPHIC REF	PART NUMBER	QTY	PART NAME 1 2 3 4 5 6 (PRODUCT LEVEL)	SEE PAGE
	1	1	**155-8076**	1	NUT	
	2	1	**155-8077**	1	WASHER	
	3	1	**243-4402**	4	GLOW PLUG	
	4	1	**154-1935**	1	SUPPORT-PLUG	

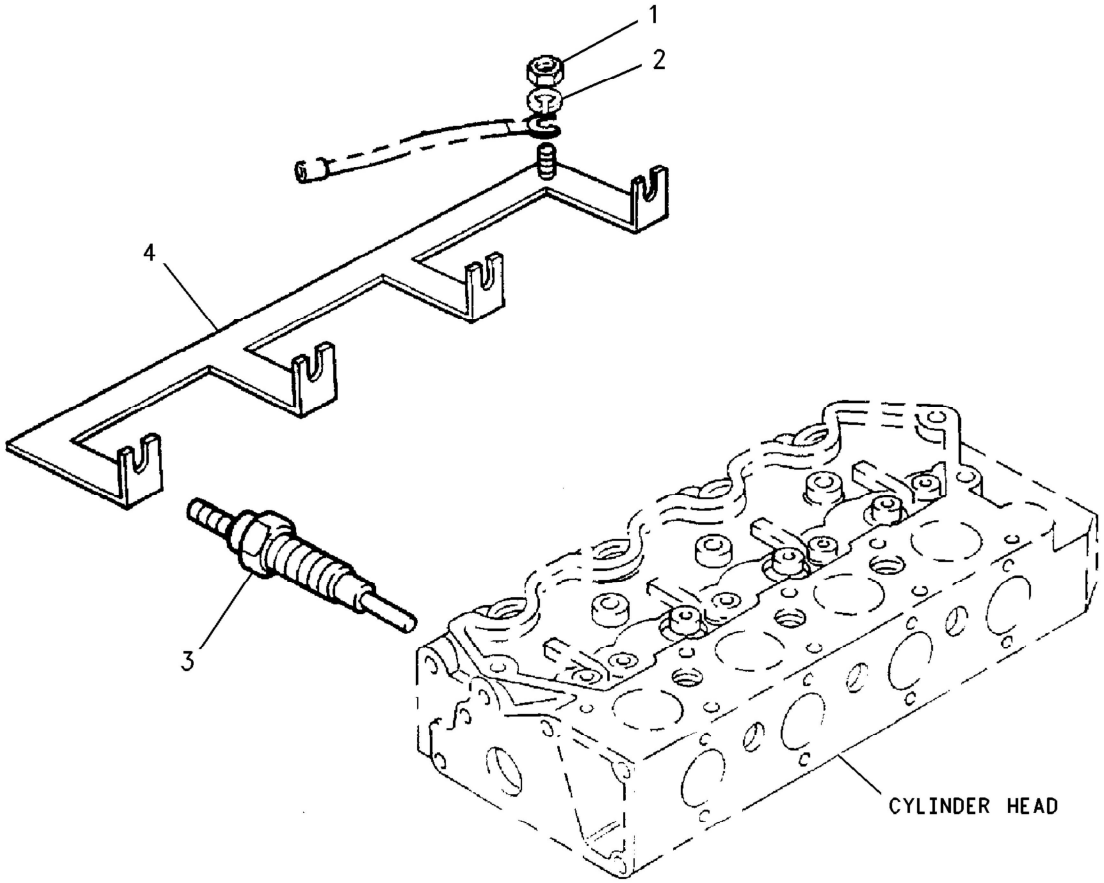

GRAPHIC #1 **<END>** g00708690

320-9114 SHUTOFF GP-ELECTRICAL

SMCS-7418 **i02898582**

NOTE	REF NO	GRAPHIC REF	PART NUMBER	QTY	PART NAME 1 2 3 4 5 6 (PRODUCT LEVEL)	SEE PAGE
	1	1	**202-2052**	1	SHUTOFF GP-ELECTRICAL	
	1A	1	**234-8762**	1	CONNECTOR	
	1B	1	**318-5038**	1	BOX	

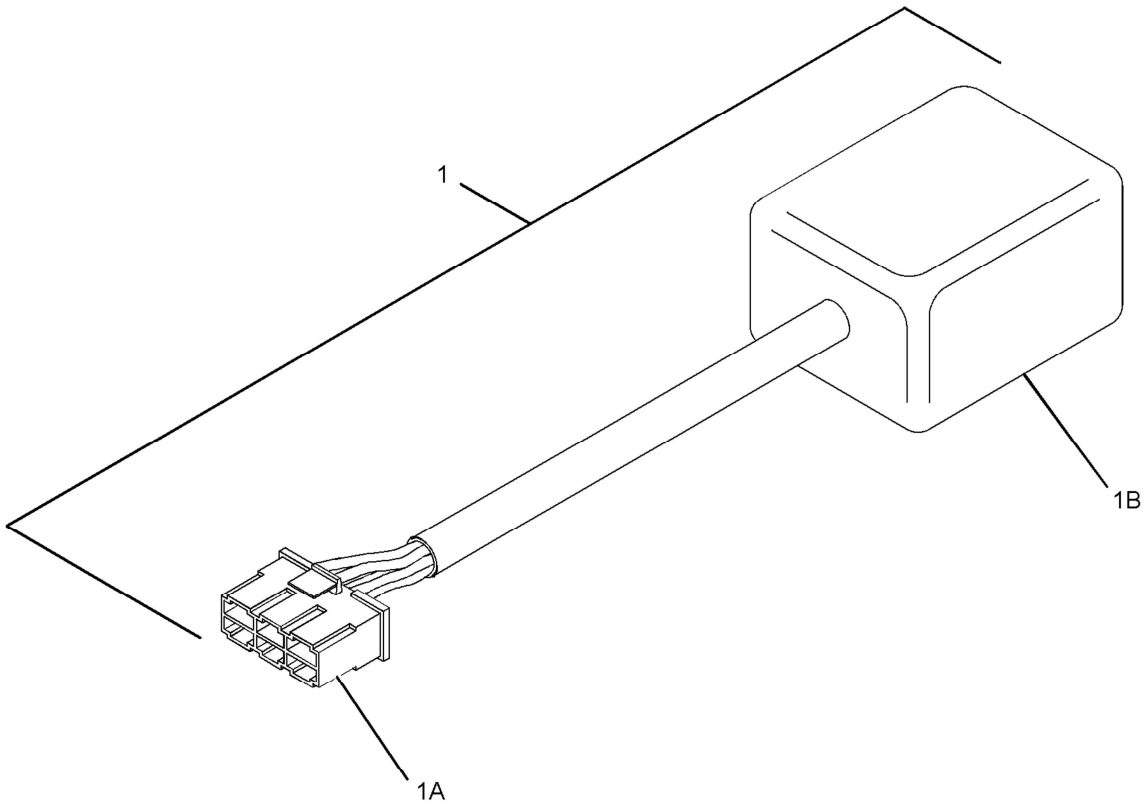

GRAPHIC #1 **<END>** g01504753

315-7817 SOLENOID GP-SHUTOFF–FUEL

SMCS-1259 **i02990602**

NOTE	REF NO	GRAPHIC REF	PART NUMBER	QTY	PART NAME 1 2 3 4 5 6 (PRODUCT LEVEL)	SEE PAGE
	1	1	**153-6412**	1	WASHER	
	2	1	**324-4598**	1	SOLENOID (FUEL SHUTOFF)	
	3	1	**315-5237**	1	LEVER-CONTROL	

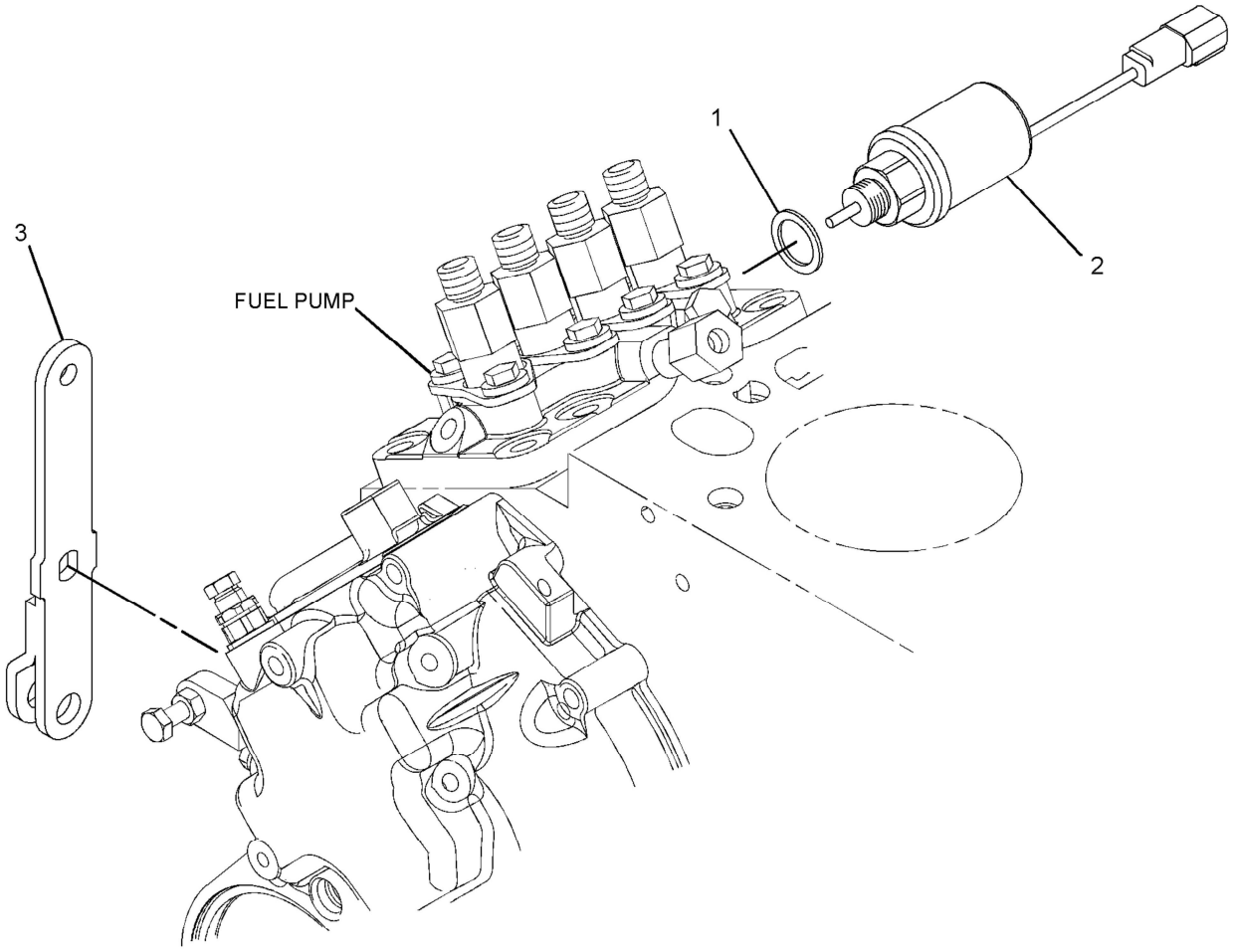

GRAPHIC #1 **<END>** g01421434

163-3361 STARTING MOTOR GP-ELECTRIC

12-VOLT

PART OF 308-2293 STARTING MOTOR GP-ELECTRIC

SMCS-1453 **i02385155**

NOTE	REF NO	GRAPHIC REF	PART NUMBER	QTY	PART NAME 1 2 3 4 5 6 (PRODUCT LEVEL)	SEE PAGE
	1	1	**242-7070**	1	BUSHING	
	2	1	**242-7071**	1	SOLENOID (STARTING MOTOR)	
	3	1	**242-7073**	1	BUSHING	
	4	1	**242-7074**	1	DRIVE-MOTOR	
	5	1	**242-7075**	1	HOLDER	
	6	1	**242-7076**	1	BUSHING	
	7	1	**242-7077**	1	KIT-STARTING MOTOR	
	8	1	**242-7078**	1	ARMATURE	

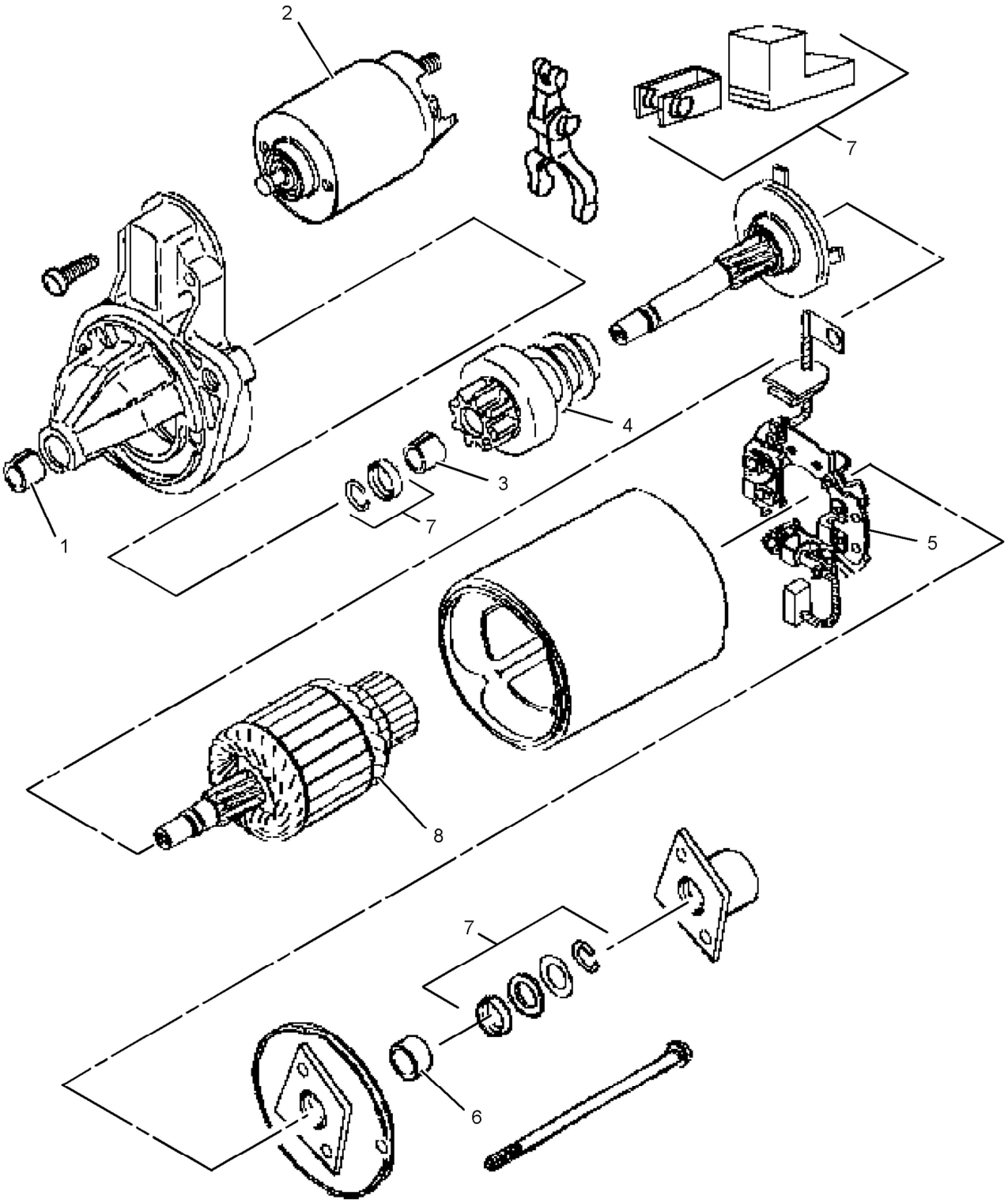

GRAPHIC #1 **<END>** g01158306

ELECTRICAL AND STARTING SYSTEM

308-2293 STARTING MOTOR GP-ELECTRIC

SMCS-1453 **i02743439**

NOTE	REF NO	GRAPHIC REF	PART NUMBER	QTY	PART NAME 1 2 3 4 5 6 (PRODUCT LEVEL)	SEE PAGE
Y	1	1	**163-3361**	1	STARTING MOTOR GP-ELECTRIC	226

Y-SEPARATE ILLUSTRATION

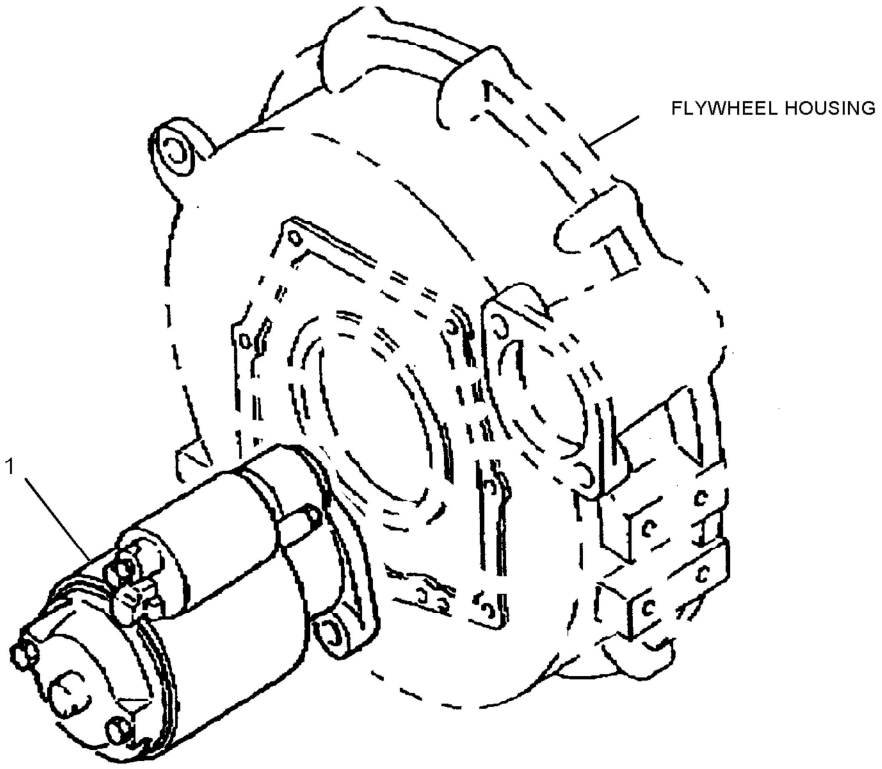

GRAPHIC #1 **<END>** g01140591

ELECTRICAL AND STARTING SYSTEM

317-3036 STARTING MOTOR GP-ELECTRIC

SMCS-1453 **i02851936**

NOTE	REF NO	GRAPHIC REF	PART NUMBER	QTY	PART NAME 1 2 3 4 5 6 (PRODUCT LEVEL)	SEE PAGE
	1	1	**283-4752**	1	MOTOR AS-ELECTRIC	

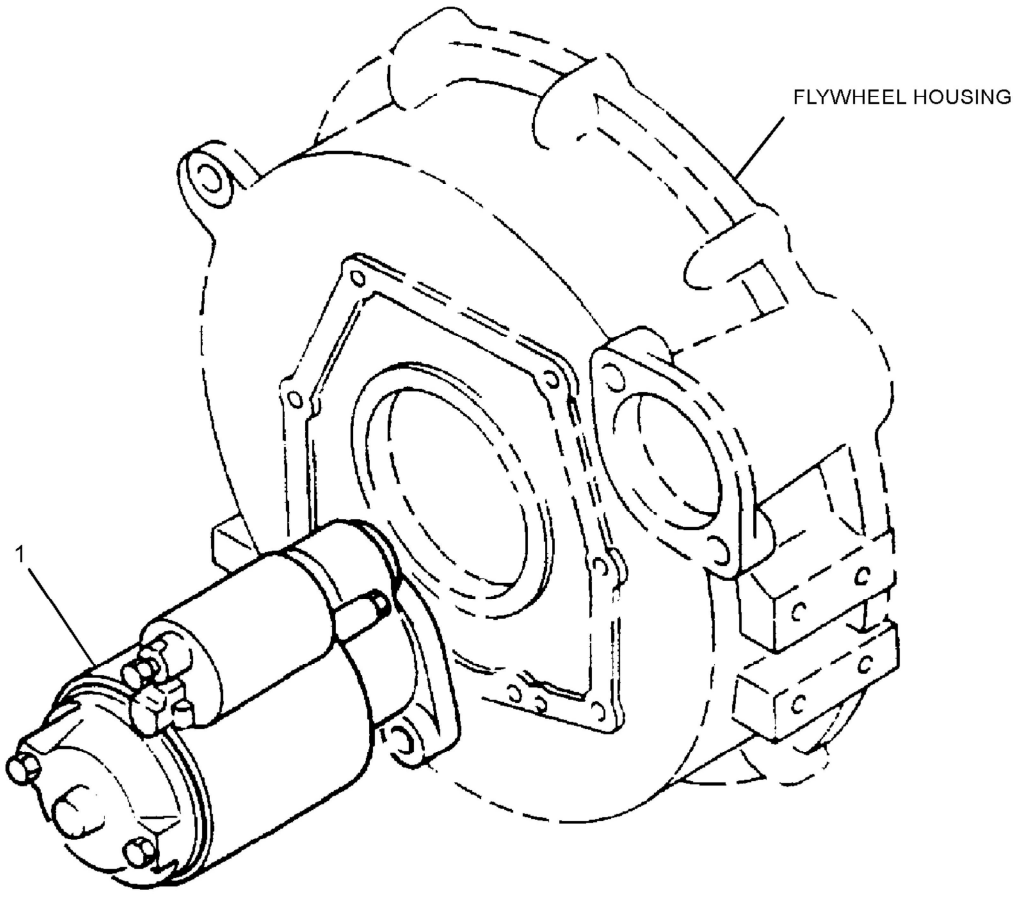

GRAPHIC #1 **<END>** g01421564

308-2312 SWITCH GP-PRESSURE–ENGINE OIL

SMCS-7400, 7421 **i02752296**

NOTE	REF NO	GRAPHIC REF	PART NUMBER	QTY	PART NAME 1 2 3 4 5 6 (PRODUCT LEVEL)	SEE PAGE
	1	1	**153-5936**	2	WASHER	
	2	1	**153-6881**	1	BOLT	
	3	1	**231-2998**	1	SWITCH-PRESSURE (ENGINE OIL)	

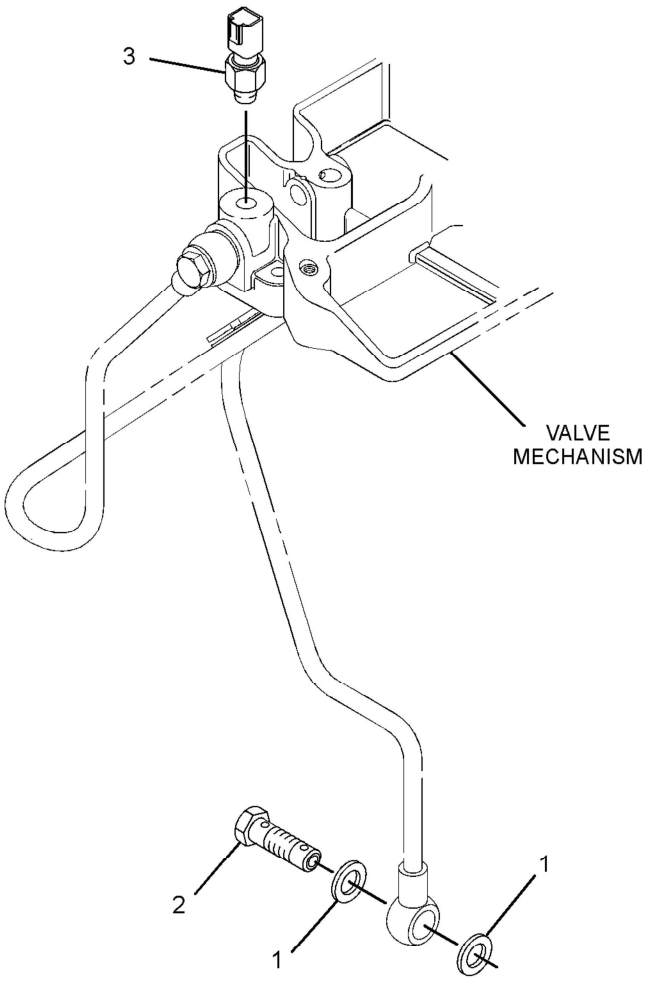

GRAPHIC #1 **<END>** g01416331

315-7819 SWITCH GP-PRESSURE–ENGINE OIL

SMCS-7400, 7421 **i02810600**

NOTE	REF NO	GRAPHIC REF	PART NUMBER	QTY	PART NAME 1 2 3 4 5 6 (PRODUCT LEVEL)	SEE PAGE
	1	1	**153-5936**	2	WASHER	
	2	1	**183-1165**	1	PLUG	
	3	1	**291-1265**	1	SWITCH-PRESSURE (ENGINE OIL)	
	4	1	**308-1222**	1	ADAPTER	

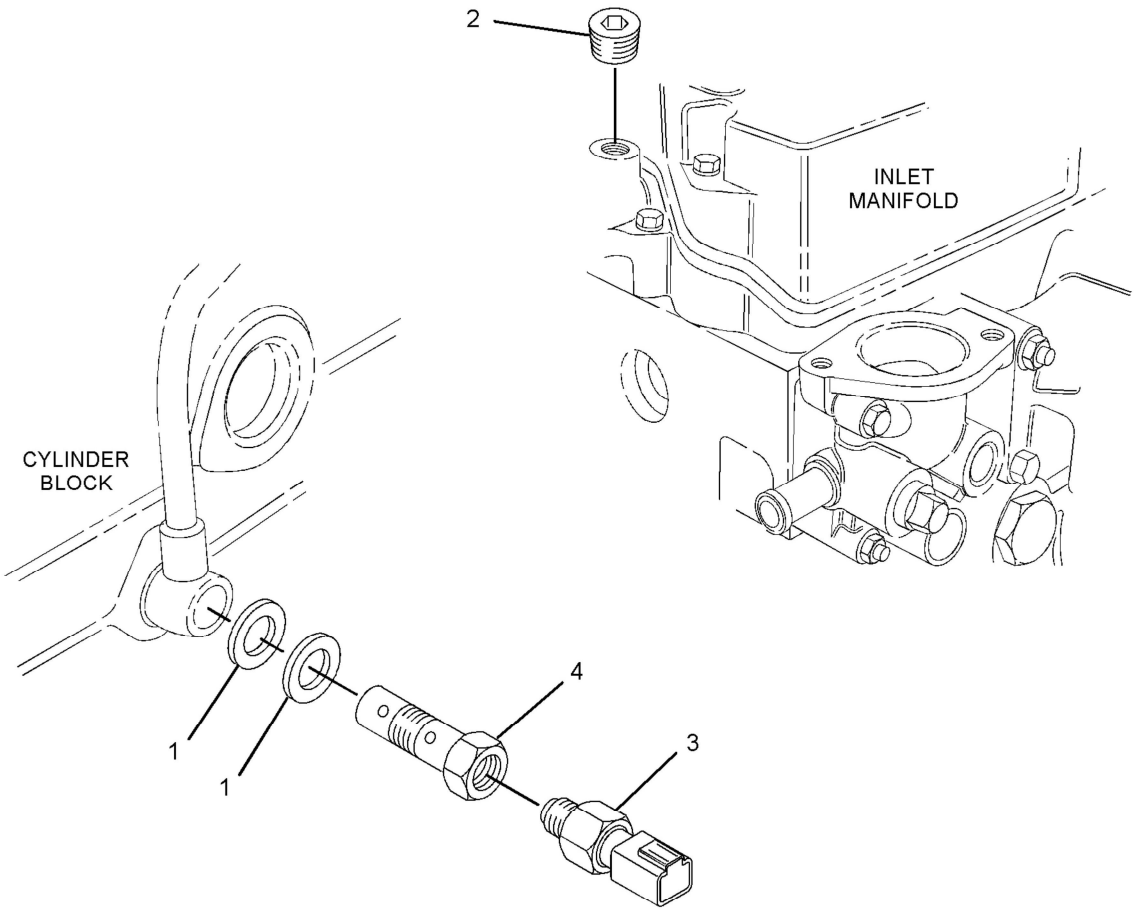

GRAPHIC #1 **<END>** g01380272

ELECTRICAL AND STARTING SYSTEM

308-2314 SWITCH GP-START

SMCS-1416 **i02752306**

NOTE	REF NO	GRAPHIC REF	PART NUMBER	QTY	PART NAME 1 2 3 4 5 6 (PRODUCT LEVEL)	SEE PAGE
	1	1	**183-5460**	1	PLATE	
	2	1	**235-0977**	1	SWITCH AS-START	
	2A	1	**183-5458**	1	CAP	
	2B	1	**251-1871**	1	KEY-IGNITION	

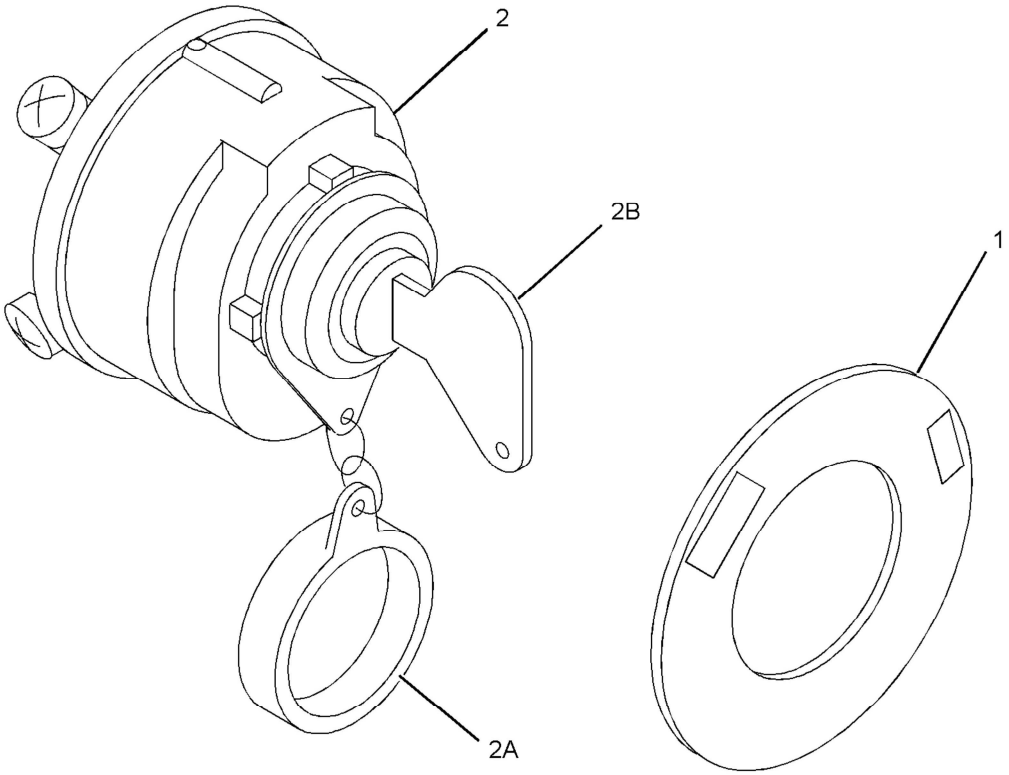

GRAPHIC #1 **<END>** g01389581

308-2317 SWITCH GP-TEMPERATURE–COOLANT

SMCS-7400 **i02752315**

NOTE	REF NO	GRAPHIC REF	PART NUMBER	QTY	PART NAME 1 2 3 4 5 6 (PRODUCT LEVEL)	SEE PAGE
	1	1	**231-2999**	1	SWITCH-TEMPERATURE (ENGINE COOLANT)	

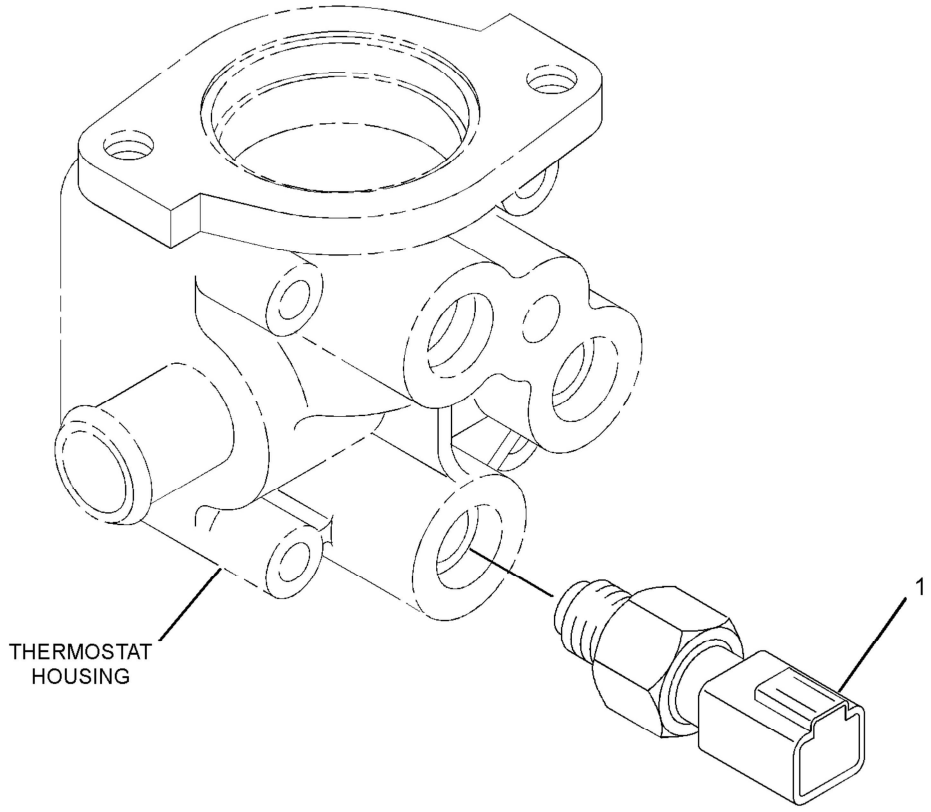

GRAPHIC #1 **<END>** g01416429

OPERATOR STATION

311-9030 INSTRUMENT GP

SMCS-7451 **i02770525**

NOTE	REF NO	GRAPHIC REF	PART NUMBER	QTY	PART NAME 1 2 3 4 5 6 (PRODUCT LEVEL)	SEE PAGE
	1	1	**271-6700**	1	SWITCH-TEMPERATURE (ENGINE COOLANT)	

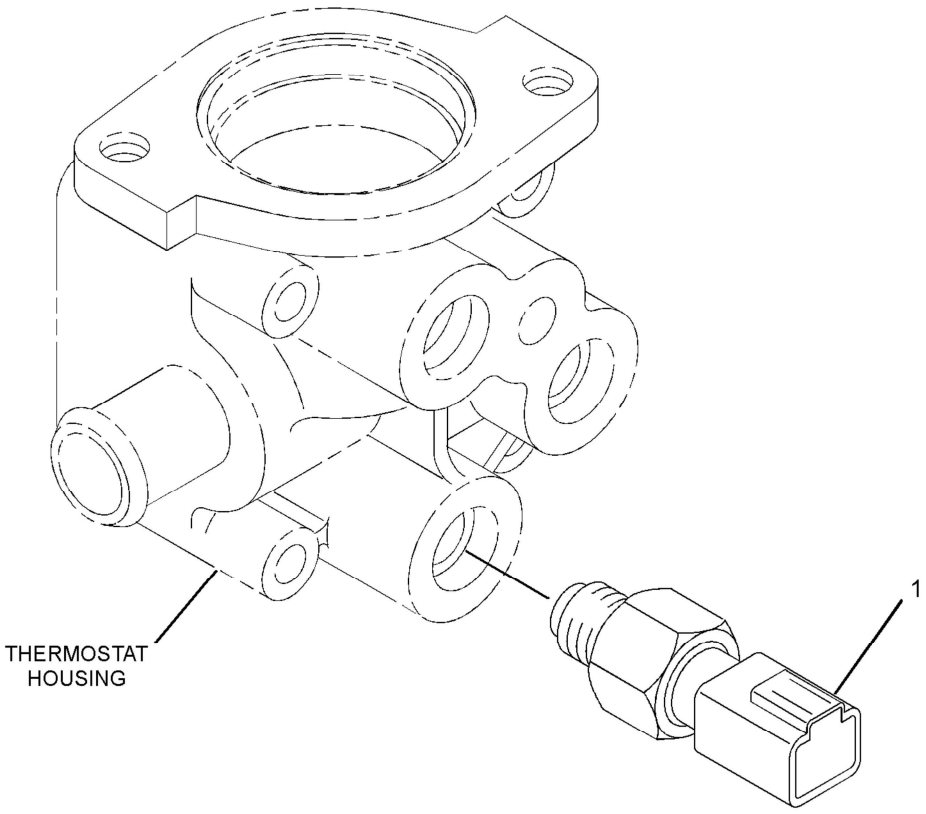

GRAPHIC #1 **<END>** g01416429

OPERATOR STATION

308-2321 LAMP GP

SMCS-4490, 7451 **i02752322**

NOTE	REF NO	GRAPHIC REF	PART NUMBER	QTY	PART NAME 1 2 3 4 5 6 (PRODUCT LEVEL)	SEE PAGE
	1	1	**198-5310**	1	LAMP (INDICATORS)	

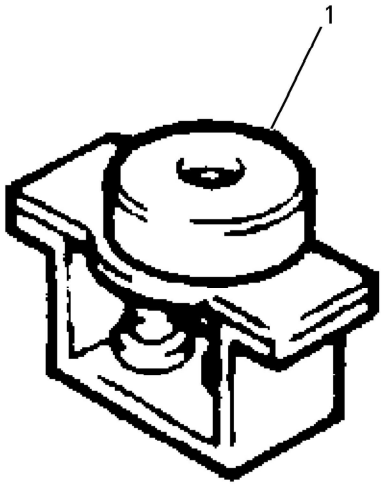

GRAPHIC #1 **<END>** g00768663

OPERATOR STATION

331-9614 LAMP GP

SMCS-4490, 7451 **i03135386**

NOTE	REF NO	GRAPHIC REF	PART NUMBER	QTY	PART NAME 1 2 3 4 5 6 (PRODUCT LEVEL)	SEE PAGE
	1	1	**291-4755**	1	LAMP (INDICATOR)	

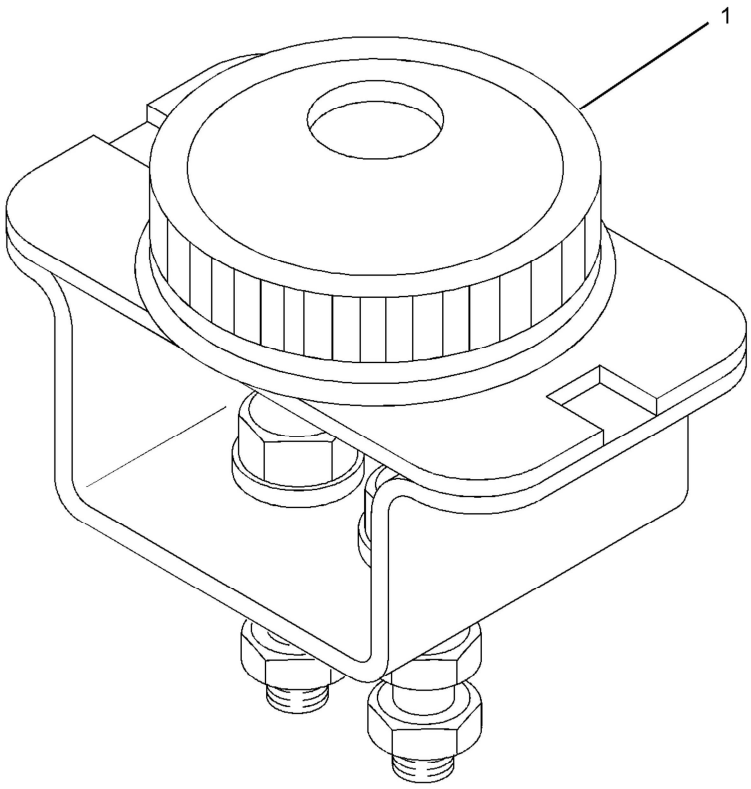

GRAPHIC #1 **<END>** g01267785

PART NUMBER INDEX

Part	Page
5	
5C-2890	67
	71
	75
	165
	167
	169
	171
	173
	175
	179
	181
5D-1026	143
	146
	148
5P-7970	156
6	
6B-0924	43
	45
6F-4855	184
	206
	211
	213
6I-0594	33
	34
	53
6I-0846	27
	29
	31
	67
	183
	184
	211
6V-5221	156
7	
7W-4694	184
	206
	211
	213
8	
8T-4189	190
	192
	194
	196
	198
	199
	201
8T-4971	67
	71
	75
	165
	167
	169
	171
	173
	175
	179
	181
9	
9X-8256	125
0	
032-8100	184
033-7849	184
	206
	211
	213
033-7854	184
	206
	211
	213
064-3058	157
	161
067-6269	184
	206
	211
	213
067-6317	184
	206
	211
	213
067-6987	184
	206
	211
	213
069-2922	184
	206
	211
	213
095-1708	102
1	
100-4463	34
100-8451	215
	216
127-8281	148
138-7162	63
	64
	65
	86
	184
	206
	211
	213
138-7171	64
138-7401	63
139-5511	67
	71
	75
	165
	167
	169
	171
	173
	175
	179
	181
150-4142	178
153-5387	43
	45
153-5391	43
	45
153-5394	43
	45
153-5395	43
	45
153-5396	43
	45
153-5402	39
	41
	43
	45
153-5518	39
	41
153-5554	47
	52
153-5556	47
	52
153-5557	47
	52
153-5558	47
	52
153-5559	47
	52
153-5587	117
153-5590	117
153-5592	67
	71
	75
	153
	155
	157
	161
	165
	167
	169
	171
	173
	175
	179
	181
	188
	190
	192
	194
	196
	198
	199
	201
	206
	209
	213
	215
	216
153-5933	123
	125
153-5936	106
	129
	132
	230
	231
153-5939	35
	37
	157
	161
153-5960	66
	67
	71
	75
	79
	81
	82
	84
	85
	87
	88
	143
	146
	148
	188
	190
	192
	194
	196
	198
	199
	201
153-5961	118
	120
	143
	146
	148
153-5962	35
	37
	66
	67
	71
	75
	79
	81
	82
	84
	85
	87
	88
	157
	161
153-6374	90
153-6375	63
	64
	65
	90
	157
	161
153-6412	107
	219
	220
	221
	225
153-6415	27
	29
	31
	67
	71
	75

► **PRIMARY REFERENCE**

PART NUMBER INDEX

Part	Page	Part	Page	Part	Page	Part	Page
	81		132		41		87
	165	153-6853	129	154-0393	43		88
	167		132		45	154-1675	66
	169		157	154-0867	103		67
	171		161		104		71
	173	153-6856	56	154-0869	103		75
	175	153-6861	55		104		79
	179		181	154-0870	103		81
	181	153-6868	63		104		82
153-6492	21		65	154-0871	103		84
	22	153-6879	122		104		85
	23		128	154-0873	103		87
	24	153-6881	129		104		88
	26		132	154-0874	103	154-1677	129
	27		230		104		132
	29	153-7640	35	154-1230	39	154-1678	129
	31		37		41		132
	67		125	154-1231	39	154-1680	21
	71		142		41		22
	75		157	154-1240	117		23
	110		161	154-1241	117		24
	111	153-7920	151	154-1242	117		26
153-6832	108		152	154-1243	117		27
153-6833	92		154	154-1246	118		29
	94	153-7983	67		120		31
	96		71	154-1248	118		67
	98		75		120		71
	100		165	154-1249	118		75
153-6835	92		167		120	154-1817	143
	94		169	154-1347	35		146
	96		171		37		148
	98		173		157	154-1822	112
	100		175		161	154-1828	135
	105		179	154-1396	67		140
	117		181		71		141
153-6838	21	153-7987	67		75	154-1831	143
	22		71	154-1399	63		146
	23		75		64		148
	24		165		65	154-1880	110
	26		167		86		111
	27		169		184	154-1935	222
	29		171		206		223
	31		173		211	154-1942	129
	43		175		213		132
	45		179	154-1403	67	154-1947	92
	67		181		71	154-1948	92
	71	153-7988	118		75	154-2353	129
	75		120		165		132
	92	154-0175	43		167	154-2394	63
	94		45		169		64
	96	154-0176	43		171		65
	98		45		173	154-2395	63
	100	154-0177	43		175		65
	206		45		179	154-2403	63
	209	154-0178	43		181		64
153-6841	92		45	154-1407	167		65
	94	154-0181	39	154-1673	66		86
	96		41		67		184
	98	154-0385	39		71		206
	100		41		75		211
153-6849	129	154-0386	39		79		213
	132		41		81	154-2405	57
153-6850	129	154-0388	39		82		58
	132		41		84		59
153-6851	129	154-0389	39		85		61

PART NUMBER INDEX

Part	Page
	62
154-2406	57
	58
	59
	60
	61
	62
154-2426	153
154-2427	153
	155
	157
	161
154-2428	153
	155
	157
	161
154-2433	142
154-2713	188
	190
	192
	194
	196
	198
	199
	201
154-2715	67
	165
	167
	169
	171
	173
	181
	188
	190
	192
	194
	196
	198
	199
	201
154-2716	188
	190
	192
	194
	196
	198
	199
	201
154-2722	199
154-2723	199
154-2724	199
154-2725	199
154-3017	188
	190
	192
	194
	196
	198
	199
	201
154-3018	192
	194
	196
	198
154-4505	21
	22
	23
	24
	26
	27
	29
	31
	67
	71
	75
155-7983	184
155-7984	89
	91
	148
	156
	157
	183
	184
	206
	209
	213
	215
155-8009	35
	37
	157
155-8076	222
	223
155-8077	222
	223
155-8080	178
155-8082	178
155-8085	64
	184
	206
	211
	213
156-6971	39
	41
156-6988	49
	51
156-6989	49
	51
160-3547	178
160-3548	178
160-3549	178
160-3550	184
	206
	213
160-3555	188
	190
	192
	194
	196
	198
	199
	201
160-3556	188
	190
	192
	194
	196
	198
	199
	201
160-3557	188
	190
	192
	194
	196
	198
	199
	201
160-3558	188
	190
	192
	194
	196
	198
	199
	201
160-3562	100
160-4150	129
	132
160-4151	129
	132
160-4152	129
	132
160-4153	129
	132
160-4826	122
161-8260	55
161-8273	105
162-2207	67
	71
	75
	165
	167
	169
	171
	173
	175
	179
	181
163-3361	▶226
	228
163-5371	155
163-5372	152
	155
	157
	161
	188
	190
	192
	194
	196
	198
	199
	201
164-7468	33
	53
165-2140	35
	37
	66
	67
	71
	75
	79
	81
	82
	84
	85
	87
	88
	157
	161
165-2141	89
	91
	139
	157
	161
	183
	184
	209
	213
	215
	216
165-2142	63
	65
	109
165-3605	108
166-2338	63
	65
168-8999	215
168-9001	86
	89
	135
	140
	141
	151
	152
	156
	157
	161
	184
	206
	213
	215
	216
168-9002	215
	216
172-4585	222
176-7719	183
	184
	211
180-6118	96
	100
	148
183-1163	43
	45
183-1164	43
	45
183-1165	106
	157
	161
	231
183-1336	39
	41
183-3213	49
	51
183-3353	188
	190
	192
	194
	196

▶ **PRIMARY REFERENCE**

PART NUMBER INDEX

Part	Page
	198
	199
	201
183-3538	67
	71
	75
	165
	167
	169
	171
	173
	175
	179
	181
183-3546	54
183-3547	54
183-3551	139
183-3552	138
183-4036	206
	209
	213
183-4320	206
	209
	213
183-4321	206
	209
	213
183-4323	206
	209
183-5458	232
183-5460	232
190-3762	35
	37
	157
	161
190-3803	188
	190
	192
	194
	196
	198
	199
	201
191-0551	113
191-0563	152
191-9297	67
	71
	75
	165
	167
	169
	171
	173
	175
	179
	181
197-8429	151
	152
197-8540	203
	204
197-8555	217
198-5310	235

2

Part	Page
202-1196	188
	190
	192
	194
	196
	198
	201
202-2052	224
205-1133	136
	137
205-4726	187
205-4727	187
205-4728	187
205-4731	192
	194
	196
	198
205-7709	155
206-3499	117
207-3697	56
209-1355	125
209-7084	94
209-7088	96
	100
210-9587	86
211-5172	114
	115
211-8559	125
215-2605	92
	94
	96
	98
	100
215-2606	206
	209
215-2617	143
	146
	148
215-2620	43
	45
217-1456	104
217-2752	118
	120
217-2760	188
	190
	192
	194
	196
	198
	201
217-2761	188
	190
	192
	194
	196
	198
	201
217-2762	188
	190
	192
	194
	196
	198

Part	Page
	201
217-2763	188
	190
	192
	194
	196
	198
	201
217-5770	43
	45
217-5859	35
	37
	157
	161
217-5860	35
	37
	181
217-5861	37
	157
	161
217-5862	35
	37
	157
	161
217-5864	35
	37
	157
	161
217-7115	67
	71
	75
	79
	165
	167
	169
	171
	173
	175
	179
	181
217-7358	123
	125
217-7379	140
218-2333	92
	94
	96
218-2334	107
218-2355	184
	206
	211
220-1523	127
221-1136	43
	45
223-8182	211
	213
225-3146	216
225-8526	157
	161
225-8533	35
	37
	157
	161
226-4918	156
226-4919	156
226-4922	156

Part	Page
226-4923	156
228-7472	96
	100
229-5150	92
	98
229-5151	92
	98
231-2998	230
231-2999	233
232-0218	181
232-0290	181
233-0584	199
233-0695	35
	37
	157
	161
233-7060	37
233-7061	35
233-9531	216
234-8762	224
234-9556	184
	206
	213
235-0977	232
236-3983	94
236-4128	89
	91
236-9987	157
	161
237-9315	43
	45
	47
	52
237-9316	43
	45
238-6914	188
238-8731	157
	161
238-9137	143
	148
238-9143	143
	148
238-9145	122
238-9196	157
	161
238-9198	157
238-9200	157
	161
238-9289	157
238-9295	157
	161
238-9349	157
	161
238-9621	109
239-0169	157
	161
239-0187	157
	161
239-0227	157
	161
239-0228	157
	161
239-0229	157
	161
239-0232	157

PART NUMBER INDEX

Part	Page
	161
242-7070	226
242-7071	226
242-7073	226
242-7074	226
242-7075	226
242-7076	226
242-7077	226
242-7078	226
243-4300	216
243-4402	223
243-6411	206
	209
	213
245-1361	143
	148
245-1362	143
	148
245-1364	143
	148
246-4267	215
246-9218	141
249-1486	157
	161
249-1532	157
	161
249-5541	143
	146
	148
249-7263	161
251-1871	232
252-1802	63
	65
252-8372	152
254-5541	217
	218
256-2084	47
	52
256-2085	47
	52
256-4813	122
262-3975	157
	161
268-3421	161
270-6968	103
270-6970	103
271-6700	234
275-0493	220
	221
276-1804	177
	204
276-1806	177
	204
283-4752	229
283-4816	216
286-7495	143
	146
	148
286-7496	143
	146
	148
288-6537	47
	52
288-6593	123
	125
288-8812	98
288-8813	98
288-8814	98
289-6119	100
289-6120	123
	125
290-8014	188
	190
	192
	194
	196
	198
	199
	201
291-1265	231
291-1808	47
	52
291-4755	236
293-0582	86
293-2167	▶117
	118
	120
293-4785	100
293-4786	100
293-9223	152
294-4916	43
	45
295-0887	116
295-4070	183
	184
	211
297-2996	135
297-3080	104
	3
301-2947	▶4
301-2948	▶5
302-1819	▶1
302-1820	▶6
302-4181	43
	45
302-4182	43
	45
302-4187	184
	206
	211
	213
302-7776	177
	204
302-7777	177
	204
302-7778	177
	204
302-7822	188
	190
	192
	194
	196
	198
	199
	201
302-7823	188
	190
	192
	194
	196
	198
	199
	201
303-0307	146
303-0338	47
	52
304-5061	157
	161
305-0584	94
	96
305-3660	215
306-6346	▶187
	199
306-9226	▶7
307-9833	▶8
307-9834	▶9
308-1222	106
	231
308-1850	43
	45
308-1852	39
	41
308-1853	39
	41
308-1854	41
308-1855	39
	41
308-1859	▶47
	49
308-1860	47
	52
308-1861	47
	52
308-1862	49
	51
308-1867	129
	132
308-1869	129
	132
308-1871	66
	67
	71
	75
	79
	81
	82
	84
	85
	87
	88
308-1874	33
	53
	67
	71
308-1875	33
	34
	53
	67
	71
	75
308-1877	67
	71
308-1878	67
	71
	75
	165
	167
	169
	171
	173
	175
	179
	181
308-1882	67
	71
	75
	165
	167
	169
	171
	173
	175
	179
	181
308-1888	173
308-1889	67
	71
	75
	165
	167
	169
	171
	173
	175
	179
	181
308-1892	67
	71
	75
	165
	167
	169
	171
	173
	175
	179
	181
308-1897	67
	71
	75
	165
	167
	169
	171
	173
	175
	179
	181
308-1901	67
	71

▶ **PRIMARY REFERENCE**

PART NUMBER INDEX

Part	Page
	75
	165
	167
	169
	171
	173
	175
	179
	181
308-1902	23
	27
	29
	31
	67
308-1903	21
	22
	23
	26
	27
	29
	31
	67
	71
	75
308-1904	21
	22
	23
	26
	27
	29
	31
	67
	71
	75
308-1905	188
	190
	201
308-1906	188
	190
	201
308-1907	143
	146
	148
308-1908	143
	148
308-1910	51
308-1911	51
308-1914	219
	221
308-1984	129
	132
308-2281	4
	5
	7
	10
	11
	14
	15
	16
	17
	18
	19
	▶43
308-2283	4
	5
	7
	10
	11
	14
	15
	16
	17
	18
	▶39
308-2284	4
	5
	7
	10
	11
	14
	15
	16
	17
	18
	19
	▶49
308-2285	4
	5
	7
	10
	11
	14
	15
	16
	17
	18
	19
	▶118
308-2286	4
	5
	7
	10
	11
	14
	15
	16
	17
	18
	19
	▶103
308-2287	4
	5
	7
	10
	11
	14
	15
	16
	17
	18
	19
	▶129
308-2288	4
	7
	11
	14
	17
	18
	▶66
308-2289	4
	7
	10
	11
	14
	17
	18
	19
	▶188
308-2290	3
	4
	5
	6
	8
	10
	12
	13
	20
	▶63
308-2291	3
	4
	5
	6
	8
	12
	13
	20
	▶57
308-2293	1
	2
	3
	4
	5
	6
	7
	8
	11
	12
	13
	14
	15
	16
	18
	19
	20
	▶228
308-2294	1
	2
	4
	5
	6
	8
	9
	10
	13
	14
	15
	16
	17
	19
	20
	▶112
308-2295	1
	2
	4
	5
	6
	13
	19
	▶92
308-2297	1
	2
	3
	4
	5
	6
	7
	8
	9
	10
	11
	12
	13
	14
	17
	18
	19
	20
	▶123
308-2298	1
	2
	3
	4
	5
	6
	7
	8
	9
	10
	11
	12
	13
	14
	15
	16
	17
	18
	19
	20
	▶127
308-2299	4
	5
	7
	10
	11
	14
	15
	16
	17
	18
	19
	▶122
308-2300	1
	2
	3
	6
	8
	9
	12
	13

PART NUMBER INDEX

Part	Page
	20
	▶110
308-2301	4
	▶143
308-2302	1
	2
	3
	4
	6
	7
	8
	10
	11
	12
	14
	15
	16
	18
	19
	20
	▶135
308-2303	1
	4
	5
	6
	7
	8
	9
	10
	12
	13
	14
	20
	▶139
308-2304	1
	4
	5
	6
	7
	8
	9
	10
	12
	13
	14
	20
	▶54
308-2305	1
	2
	3
	4
	5
	6
	7
	8
	11
	12
	13
	14
	15
	16
	18
	19
	20
	▶215
308-2306	1
	2
	4
	5
	6
	8
	13
	14
	15
	16
	18
	19
	20
	▶114
308-2307	1
	2
	3
	4
	5
	6
	7
	8
	9
	10
	11
	12
	13
	14
	15
	16
	17
	18
	19
	▶33
308-2308	4
	5
	7
	10
	11
	14
	17
	18
	19
	▶157
308-2309	3
	4
	5
	6
	8
	11
	17
	18
	19
	▶151
308-2310	1
	3
	4
	5
	6
	7
	9
	10
	13
	14
	17
	18
	19
	20
	▶184
308-2311	1
	2
	3
	4
	5
	6
	7
	8
	9
	11
	12
	13
	14
	15
	16
	18
	19
	20
	▶222
308-2312	1
	4
	5
	6
	10
	12
	14
	15
	16
	▶230
308-2313	1
	2
	3
	4
	5
	6
	7
	8
	9
	11
	12
	14
	15
	16
	18
	20
	▶219
308-2314	1
	4
	5
	6
	7
	9
	14
	20
	▶232
308-2315	4
	5
	▶89
308-2317	1
	2
	3
	4
	5
	6
	7
	8
	9
	10
	11
	12
	13
308-2319	1
	4
	5
	6
	14
	19
	20
	▶217
308-2320	1
	4
	5
	6
	7
	9
	10
	▶203
308-2321	1
	3
	4
	5
	6
	7
	9
	13
	14
	19
	▶235
308-2362	39
308-3329	5
	▶67
308-3330	5
	▶190
308-4266	67
	71
	75
	165
	167
	169
	171
	173
	175
	179
	181
308-4735	1
	2
	3
	6
	8
	9
	12
	13
	20
	▶128

▶ **PRIMARY REFERENCE**

PART NUMBER INDEX

Part	Page
308-5610	7
	▶152
308-5704	12
	19
	▶177
309-6712	1
	2
	3
	6
	8
	9
	12
	13
	20
	▶45
309-6713	1
	2
	3
	6
	8
	9
	12
	13
	20
	▶41
309-6714	1
	2
	3
	6
	8
	9
	12
	13
	20
	▶104
309-6715	1
	2
	3
	6
	8
	9
	12
	13
	20
	▶51
309-6716	1
	2
	3
	6
	8
	9
	12
	13
	20
	▶120
309-6717	1
	2
	3
	6
	8
	9
	12
	13
	20
	▶132
309-6718	1
	3
	6
	8
	9
	▶71
	▶75
309-6719	1
	3
	6
	8
	9
	▶192
309-6720	1
	2
	4
	5
	6
	7
	8
	9
	10
	11
	12
	13
	14
	18
	19
	▶107
309-6721	1
	2
	3
	6
	8
	9
	12
	13
	20
	▶146
309-6722	12
	13
	20
	▶35
309-6724	1
	2
	6
	8
	9
	12
	20
	▶153
309-6725	1
	2
	3
	4
	5
	6
	7
	8
	9
	10
	11
	12
	13
	14
	15
	16
	17
	18
	19
	20
	▶90
	▶91
309-6728	67
	71
	75
	165
	167
	169
	171
	173
	175
	179
	181
309-6729	71
	75
	79
	175
	179
	181
309-6732	67
	71
	75
	165
	167
	169
	171
	173
	175
	179
	181
309-6733	21
	22
	26
	71
	75
309-6734	192
	194
	196
	198
309-6735	35
	37
309-6736	35
	37
309-6737	90
310-1532	▶10
310-7852	▶11
311-0023	143
	146
	148
311-0655	67
	71
	75
	165
	167
	169
	171
	173
	175
	179
311-0656	66
	79
311-1119	3
	▶55
311-1174	184
	206
311-1682	20
	▶79
311-1683	20
	▶194
311-1883	7
	9
	15
	16
	▶64
311-1884	9
	10
	▶58
311-1886	7
	8
	9
	12
	20
	▶94
311-2714	▶12
311-3840	▶13
311-7561	188
	190
	192
	194
	196
	198
	199
	201
311-9023	12
	▶81
311-9024	12
	▶179
311-9025	12
	▶21
311-9026	12
	▶196
311-9027	3
	7
	11
	12
	18
	▶113
311-9028	12
	▶206
311-9029	3
	7
	11
	12
	18
	▶115
311-9030	12
	▶234
311-9048	206
	211
	213
313-2025	167
313-5832	67
	71

PART NUMBER INDEX

Part	Page
	75
	165
	169
	171
	173
	175
	179
	181
313-5833	67
	71
	75
	165
	169
	171
	173
	175
	179
	181
313-9323	21
	22
	23
	24
	26
	27
	29
	31
	67
	71
	75
315-5235	167
315-5236	167
315-5237	220
	225
315-5256	2
	15
	16
	▶154
315-7813	11
	17
	18
	19
	▶142
315-7814	8
	▶183
315-7817	13
	19
	▶225
315-7819	2
	3
	7
	8
	9
	11
	13
	19
	20
	▶231
316-2275	94
	96
317-0586	1
	14
	17
	▶59
317-0588	1
	11
	14
	17
	18
	19
	▶65
317-0590	1
	2
	3
	6
	8
	9
	▶37
317-0962	157
	161
317-0979	7
	10
	11
	14
	15
	16
	17
	18
	19
	▶148
317-0980	9
	▶140
317-3036	10
	17
	▶229
317-3037	10
	11
	14
	18
	▶96
317-3038	10
	▶216
317-3039	10
	▶116
317-3040	10
	17
	▶223
317-3041	10
	▶220
317-4987	▶2
317-6706	13
	14
	20
	▶204
317-7186	13
	▶82
317-7187	13
	▶165
317-7188	13
	▶22
317-7190	13
	▶198
317-7191	13
	17
	▶141
317-7192	3
	13
	▶155
317-7193	13
	▶156
317-7194	13
	▶136
317-7195	67
	71
	75
	165
	169
	171
	173
	175
	179
	181
318-5011	65
318-5038	224
318-8382	129
	132
318-8442	▶3
318-8497	▶14
319-1623	2
	▶138
319-3250	71
	75
	169
	175
319-3252	165
	179
319-3253	67
	171
319-7366	92
	94
	96
	98
	100
320-8401	35
320-9114	14
	19
	▶224
321-3145	167
321-4061	51
	▶52
321-4249	67
	71
	75
	165
	167
	169
	171
	173
	175
	179
	181
321-4250	24
321-4251	24
321-4252	24
321-5907	53
321-6711	▶15
321-6712	▶16
321-6738	110
	111
321-6740	4
	5
	7
	10
	11
	14
	15
	16
	▶218
321-8209	181
321-8210	71
	173
321-8211	181
321-8212	181
321-8214	181
321-8216	181
321-8217	181
321-8218	181
322-2412	7
	15
	16
	▶60
322-2416	3
	15
	16
	▶98
322-2420	3
	15
	16
	17
	▶108
322-2421	15
	16
	▶125
322-2422	15
	16
	▶109
322-2426	15
	16
	▶105
322-2427	15
	16
	▶137
322-6874	43
	45
322-7485	49
	51
322-7486	49
322-7487	49
322-7488	49
322-7490	67
	71
	75
	81
	82
	85
	87
	88
322-7491	71
	173
322-7492	67
	71
	75

▶ **PRIMARY REFERENCE**

PART NUMBER INDEX

Part	Page	Part	Page	Part	Page	Part	Page
	165		►161		165		
	167	326-8546	161		167		
	169	327-5154	57		169		
	171	327-5241	59		171		
	173	327-5608	62		175		
	175	327-7632	11		179		
	179		18		181		
	181		19	332-1362	19		
322-7493	67		►62		►88		
	71	327-7633	11	332-1363	19		
	75		►211		►175		
	165	328-1882	15	332-1364	19		
	167		16		►31		
	169		►213	334-0732	67		
	171	328-3226	84		75		
	173	328-3229	33		165		
	175		34		167		
	179		53		169		
	181	328-3230	53		171		
323-9145	10	328-3294	15		175		
	11		16		179		
	►84		►201		181		
323-9146	10	328-3296	15	335-5578	75		
	11		16		175		
	14		►53				
	►181	328-3297	15				
323-9147	10		►102				
	11	328-3299	53				
	14	328-5174	181				
	►23	329-2157	►20				
323-9157	17	329-3694	34				
	►106	329-3695	34				
324-4598	219	329-3696	20				
	225		►34				
325-4339	►17	329-9277	4				
325-5661	2		7				
	►85		11				
325-5662	2		17				
	►167		18				
325-5663	2		►171				
	►24	329-9278	4				
325-5665	2		7				
	►199		11				
325-5667	2		17				
	►86		18				
325-5668	2		►27				
	►61	330-9189	171				
325-5669	2		175				
	15	331-0214	15				
	16		16				
	►56		►87				
325-5670	2	331-0215	15				
	►209		16				
325-5671	2		►173				
	►178	331-0216	15				
325-5672	61		16				
325-9475	20		►29				
	►169	331-9610	17				
325-9476	20		►100				
	►26	331-9611	17				
326-5052	58		►221				
326-6416	►18	331-9614	17				
326-7873	►19		►236				
326-8542	15	332-1361	67				
	16		75				

► PRIMARY REFERENCE



© 2008 CATERPILLAR
ALL RIGHTS RESERVED

CAT, CATERPILLAR, THEIR RESPECTIVE LOGOS, “CATERPILLAR YELLOW” AND THE POWER EDGE TRADE DRESS, AS WELL AS CORPORATE AND PRODUCT IDENTITY USED HEREIN, ARE TRADEMARKS OF CATERPILLAR AND MAY NOT BE USED WITHOUT PERMISSION.

PRINTED IN U.S.A.

Wartungsanleitung
Maintenance Instruction
Instruction de maintenance

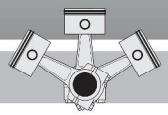

KW-540-1

Offene Hubkolbenverdichter für Fahrzeug-Anwendungen

- **4UFC(Y) .. 4NFC(Y)**
- **4UFR(Y) .. 4NFR(Y)**
- **6UFC(Y) .. 6NFC(Y)**

Open drive reciprocating compressors for Transport Applications

- **4UFC(Y) .. 4NFC(Y)**
- **4UFR(Y) .. 4NFR(Y)**
- **6UFC(Y) .. 6NFC(Y)**

Compresseurs ouverts à pistons pour applications en transport

- **4UFC(Y) .. 4NFC(Y)**
- **4UFR(Y) .. 4NFR(Y)**
- **6UFC(Y) .. 6NFC(Y)**

Inhalt

1 Allgemeines

2 Sicherheit

3 Werkzeuge und Hilfsmittel

4 Verdichter-Schnittbild

5 Regelmäßige Wartungsarbeiten
5.1 Empfohlene Routineüber-prüfungen
5.2 Wartungsarbeiten

6 Austausch einzelner Bauteile
6.1 Verdichter aus- und einbauen
6.2 Magnetkupplung austauschen
6.3 Wellenabdichtung austauschen
6.4 Lagerdeckel / Ölpumpe austauschen
6.5 Druckentlastungsventil austauschen
6.6 Ventilplatte / Zylinderkopf-dichtung austauschen
6.7 Leistungsregelung prüfen / austauschen (Zubehör)

7 Komplette Überholung des Verdichters
7.1 Demontage des Verdichters
7.2 Auf Schäden und Verschleiß prüfen
7.3 Verdichter zusammenbauen

8 Fehlerdiagnose

Content

1 General information

2 Safety

3 Tools and other devices

4 Compressor sectional view

5 Regular maintenance work
5.1 Recommended routine checks
5.2 Maintenance tasks

6 Replacement of single components
6.1 Removing and installing compressor
6.2 Replacement of magnetic clutch
6.3 Replacement of shaft seal
6.4 Bearing cover / oil pump replacement
6.5 Replacement of pressure relief valve
6.6 Replacement of valve plate / cylinder head gasket
6.7 Check / replace capacity control (accessory)

7 Complete overhaul of the compressor
7.1 Dismounting the compressor
7.2 Checking for damage and wear
7.3 Assembling compressor

8 Error diagnosis

Sommaire

1 Généralités

2 Sécurité

3 Outillage et équipements auxiliaires

4 Vue en coupe du compresseur

5 Entretiens réguliers
5.1 Contrôles de routine préconisés
5.2 Travaux d'entretien

6 Remplacement de pièces individuelles
6.1 Démonter et remonter le compresseur
6.2 Remplacer l'embrayage électromagnétique
6.3 Remplacer la garniture d'étanchéité
6.4 Remplacer le couvercle de palier / la pompe à huile
6.5 Remplacer la soupape de décharge
6.6 Remplacer la plaque à clapets / le joint de tête de culasse
6.7 Contrôler / remplacer la régulation de puissance (accessoire)

7 Remise en état complète du compresseur
7.1 Démontage du compresseur
7.2 Evaluer les dégâts et l'usure
7.3 Réassembler le compresseur

8 Diagnostic des défauts

1 Allgemeines

BITZER-Verdichter werden mit Sorgfalt und höchster Fertigungsqualität produziert. Einhaltung der in den Projektierungs-Handbüchern und Bedienungsanleitungen gegebenen Hinweise gewährt zuverlässigen Betrieb und eine lange Lebensdauer.

Sollte es im Betrieb dennoch zu Problemen kommen, so lässt sich dies meist auf Fehler in der Anlage zurückführen. Um schwere Folgeschäden oder den Totalausfall des Verdichters zu vermeiden, muss die eigentliche Ursache für die Störung gefunden und beseitigt werden.

Wenn nach langer Laufzeit Verschleißerscheinungen bemerkbar werden, empfiehlt sich im Regelfall der Austausch des Verdichters.

Wird der Austausch einzelner Bauteile oder eine komplette Überholung bevorzugt, kann nach Abschnitt 6 und 7 vorgegangen werden.

Technische Änderungen vorbehalten!
Eventuelle Änderungen von technischen Details sowie Änderungen in Konstruktion, Ausstattung und Zubehör gegenüber den Angaben und Abbildungen der Wartungsanleitung bleiben dem Hersteller vorbehalten.

Für Schäden am Verdichter, die durch unsachgemäße Handhabung verursacht werden, übernimmt BITZER keine Gewährleistung.

1 General information

BITZER compressors are produced with the greatest care and production quality. Observing the indications given in the applications manuals and operating instructions ensures the dependable operation and a long service life.

Should problems arrive during operation despite this, it is mostly due to errors made in the plant. To avoid further damages or complete failure of the compressor, the actual cause for the malfunction must be found and eliminated.

When signs of wear become noticeable after a longer running time, it is generally recommended to replace the compressor.

If you prefer to replace single components or to carry out a complete overhaul, you may proceed according to sections 6 and 7.

Subject to technical modifications!
The manufacturer reserves the right to make modifications of technical details as well as modifications in construction, equipment and accessories with respect to the data and illustrations of the maintenance instructions should they become necessary.

BITZER assumes no warranty for damages to the compressor that have been caused by incorrect handling.

1 Généralités

Les compresseurs BITZER sont produits avec soin et une qualité de fabrication des plus élevées. Le respect des recommandations contenues dans les manuels de mise en œuvre et les instructions de service garantit un fonctionnement fiable et une longue durée de vie.

Cependant, si des problèmes de fonctionnement viennent à apparaître, ceux-ci sont dûs généralement à des défauts dans la conception de la installation. Afin d'éviter de gros dégâts qui en seraient la conséquence, ou une complète défaillance du compresseur, il faut rechercher la véritable cause du défaut et y remédier.

Si des signes d'usure apparaissent après une longue durée de fonctionnement, il est généralement recommandé de remplacer le compresseur.

Dans le cas du remplacement de pièces individuelles ou d'une remise en état complète du compresseur, se référer alors aux paragraphes 6 et 7.

Sous réserve de modifications techniques !
Le fabricant se réserve le droit de modifications éventuelles de détails techniques, ainsi que de modifications de la construction, de l'équipement et des accessoires par rapport aux données et figures contenues dans les instructions de maintenance.

BITZER n'accorde pas de garantie pour des dégâts résultant d'un usage inapproprié du compresseur.

2 Sicherheit

Autorisiertes Fachpersonal
Sämtliche Arbeiten an Verdichtern und Kälteanlagen dürfen nur von qualifiziertem und autorisiertem Fachpersonal ausgeführt werden.

Die hier beschriebenen Tätigkeiten sind sehr anspruchsvoll und erfordern höchste Präzision.

2 Safety

Authorized personnel
All work done on the compressors and the refrigeration plants may only be performed by qualified and authorized personnel.

The activities described here are very complex and require the highest precision.

2 Sécurité

Personnel compétent autorisé
Toutes les interventions sur les compresseurs et les installations frigorifiques doivent être exécutées exclusivement par un personnel compétent, autorisé et qualifié.

Les activités décrites ci-après sont très exigeantes et nécessitent une précision des plus élevées.

Vorsicht!
Im Betrieb können Oberflächen-Temperaturen von über 100°C bzw. unter 0°C auftreten.
Schwere Verbrennungen sind möglich.
Zugängliche Stellen absperren und kennzeichnen.
Vor Arbeiten am Verdichter: Anlage ausschalten und abkühlen lassen.

Warnung!
Verdichter kann unter Druck stehen!
Bei unsachgemäßen Eingriffen sind schwere Verletzungen möglich.
Verdichter vor Wartungs- oder Reparaturarbeiten auf drucklosen Zustand bringen.

Achtung!
Kältemaschinenöle können größere Mengen Luftfeuchtigkeit aufnehmen, die zu chemischen Reaktionen im Kältekreislauf führen.
Verdichter-Folgeschäden möglich!
Bei Installation oder Wartungsarbeiten Öl befüllten Verdichter nicht länger als 15 Minuten geöffnet lassen.
Nach Wartung oder evtl. Reparatur Verdichter evakuieren. Anschließend mit gasförmigem Kältemittel befüllen, Absperrventile öffnen. Falls der Verdichter am Lager gehalten werden soll, nach dem Evakuieren Schutzgas (N_2 – 0,5 bar) einfüllen. Schutzgas muss bei nachfolgendem Einsatz des Verdichters durch Evakuieren abgesaugt werden!

Caution!
During operation, surface temperatures exceeding 100°C or below 0°C can be reached.
Serious burns and frostbite are possible.
Lock and mark accessible sectors.
Before working on the compressor: Switch off the plant and let it cool off.

Warning!
The compressor may be under pressure!
Incorrect handling can lead to serious injuries.
Before any maintenance or repair work, relieve the compressor of pressure.

Attention!
Refrigeration compressor oils can absorb larger quantities of air humidity that lead to chemical reactions in the refrigerant circuit.
Consequential damages to the compressor are possible!
When performing installation or maintenance tasks, do not keep the oil filled compressor open longer than 15 minutes.
Evacuate the compressor completely after maintenance or repair. Fill up afterward with gaseous refrigerant, open shut-off valves. In case the compressor is to be stored, fill up with holding charge (N_2 – 0.5 bar) after the evacuation. The holding charge must be extracted by evacuation when the compressor is to be used again!

Prudence !
Des températures en surface supérieures à 100° C resp. inférieures à 0° C peuvent apparaître durant le fonctionnement. De graves brûlures sont possibles. Délimiter et signaliser les endroits accessibles.
Avant les travaux sur le compresseur: arrêter l'installation et la laisser refroidir.

Avertissement !
Le compresseur peut être sous pression! Risque de blessures graves en cas d'interventions inappropriées.
Avant les travaux de maintenance ou de réparation, amener le compresseur à pression atmosphérique.

Attention !
Les huiles pour machines frigorifiques peuvent absorber une grande quantité d'humidité de l'air, ce qui peut engendrer des réactions chimiques dans le circuit frigorifique.
Il peut en résulter des dégâts sur le compresseur!
Lors de la mise en place ou durant les travaux de maintenance, limiter le temps d'ouverture du compresseur rempli d'huile à maximum 15 minutes.
Procéder à la mise à vide du compresseur après maintenance ou réparation. Introduire ensuite le fluide frigorigène gazeux, ouvrir les vannes d'arrêt. Si le compresseur reste en stock, le remplir d'un gaz de protection (N_2 – 0,5 bar) après la mise à vide. Ce gaz de protection sera retiré lors de l'opération de mise sous vide du compresseur réutilisé.

3 Werkzeuge und Hilfsmittel

- Plastikhammer (2 kg)
- Innensechskantschlüssel (SW 10)
- Drehmomentschlüssel
- Öl-Auffangwanne
- Waschbenzin und Putzlappen
- Schaber, Schmirgelleinen (zum Entfernen von Dichtungsresten)
- Ringschlüssel (SW 13, 17, 27)
- Seegerringzange
- Montagehülse für Welle
- Montageglocke für Seegerring
- Montagering für Kolben/Pleuel

3 Tools and other devices

- Plastic hammer (2 kg)
- Allen key (SW 10)
- Torque wrench
- Oil drip pan
- Petroleum ether and cleaning cloths
- Scraper, smoothing cloth (for removing remains of gasket)
- Ring spanners (SW 13, 17, 27)
- Circlip pliers
- Mounting sleeves for shaft
- Mounting bell for Seeger ring
- Mounting ring for piston/connecting rod

3 Outillage et équipements auxiliaires

- Maillet à embouts plastiques (2 kg)
- Clé pour vis à six pans creux (SW 10)
- Clé dynamométrique
- Bac de récupération d'huile
- Ligroïne et chiffons
- Racloir, toile d'émeri (pour retirer les restes de joint)
- Clé polygonale (SW 13, 17, 27)
- Pince à circlip
- Douille de montage pour arbre
- Douille de montage pour circlip
- Bague de montage pour piston/bielle

4 Verdichter-Schnittbild **4 Compressor sectional view** **4 Vue en coupe du compresseur**

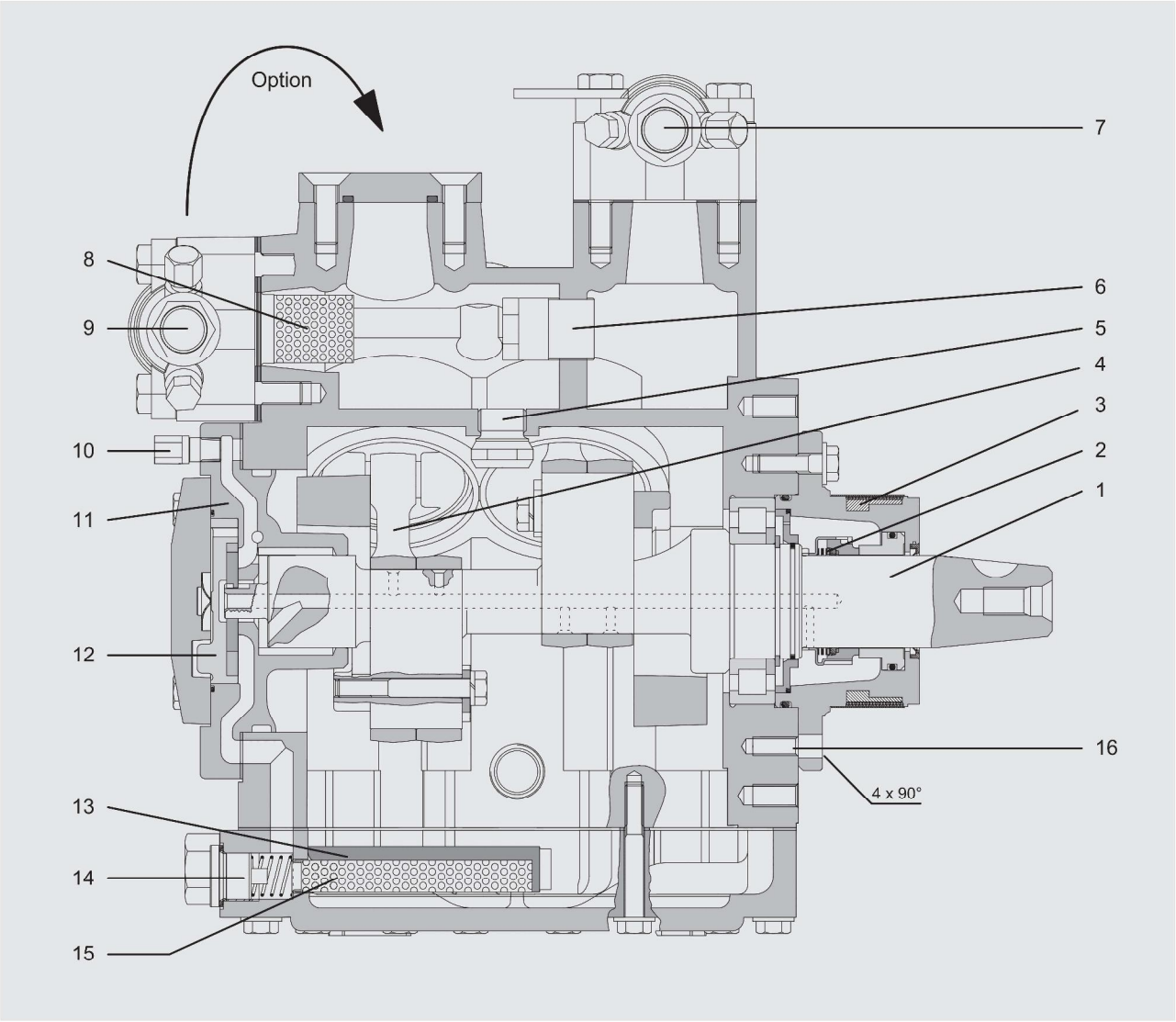

Abb. 1 Offener Hubkolbenverdichter für Fahrzeuganwendung

1 Exzenterwelle
2 Wellenabdichtung
3 Filzring
4 Kolben / Pleuel
5 Druckausgleichsventil
6 Druckentlastungsventil
7 Druckabsperrventil (DL)
8 Saugfilter
9 Saugabsperrventil (SL)
10 Schraderventil für Öldruckmessung
11 Lagerdeckel
12 Ölpumpe
13 Öltrockner (Option)
14 Magnetstopfen
15 Ölfilter
16 Gewinde für Magnetkupplung

Fig. 1 Open drive reciprocating compressor for transport application

1 Eccentric shaft
2 Shaft seal
3 Felt ring
4 Piston / connecting rod
5 Pressure equalizing valve
6 Pressure relief valve
7 Shut-off valve (DL)
8 Suction filter
9 Suction shut-off valve (SL)
10 Schrader valve for oil pressure measurement
11 Bearing cover
12 Oil pump
13 Oil dryer (option)
14 Magnetic plug
15 Oil filter
16 Thread for magnetic clutch

Fig. 1 Compresseur ouvert à pistons pour applications en transport

1 Arbre d'excentrique
2 Garniture d'étanchéité
3 Bague feutre
4 Piston / bielle
5 Soupape d'égalisation de pression
6 Soupape de décharge
7 Vanne d'arrêt au refoulement (DL)
8 Filtre d'aspiration
9 Vanne d'arrêt à l'aspiration (SL)
10 Vanne Schrader pour prise de pression d'huile
11 Couvercle de palier
12 Pompe à huile
13 Deshydrateur d'huile (option)
14 Bouchon magnétique
15 Filtre à huile
16 Filetage pour embrayage électromagnétique

5 Regelmäßige Wartungsarbeiten

Eine komplette Wartung des Verdichters nach einer bestimmten Betriebsdauer ist grundsätzlich nicht erforderlich. Dennoch werden gewisse Routineüberprüfungen empfohlen.

5.1 Empfohlene Routineüberprüfungen

In der Regel genügen einfache optische Wartungskontrollen am eingebauten Verdichter:

- Verdichter auf Verschmutzungen und Leckagen überprüfen.
- Riemenvorspannung überprüfen.
- Riemen auf Verschleiß prüfen.
- Anlage mit erhöhter Leerlauf-Drehzahl auf Betriebstemperatur bringen. Nach ca. 15 min. die Schmierung des Verdichters kontrollieren.
- Ölstand ¼ bis ¾ Schauglashöhe.
- Messen des Öldifferenzdrucks (Abb. 1, Anschluss 10) bei Drehzahl ca. 1500 min^{-1} und Öltemperatur ab 40°C:
  - Differenz gegen Saugdruck (Sollwert) ca. 1.4 bar oder höher.

5.2 Wartungsarbeiten

- Antrieb: Spannband (Abb. 3, Pos. 11) entfernen und Filzring (Abb. 3, Pos. 12) auswechseln.
- Schmierung:
  Bei ordnungsgemäß betriebenen Anlagen ist ein Wechsel des Kältemaschinenöls nicht zwingend erforderlich. Lediglich Verunreinigungen aus den Anlagenkomponenten oder Betrieb außerhalb der Anwendungsbereiche können zu Ablagerungen im Schmieröl führen und es dunkel verfärben. In diesem Fall Öl wechseln. Dabei auch Ölfilter und Magnetstopfen reinigen. Die Ursache für Betrieb außerhalb der Anwendungsbereiche ermitteln und beheben.
  Empfehlung: Etwa alle 3 Jahre bzw. 10 000 .. 12 000 Betriebsstunden Öl und ggf. Öltrockner wechseln, Ölfilter und Magnetstopfen reinigen.
- Saug-/Druckbereich:
  - Sauggasfilter reinigen oder austauschen.
  - Zylinderköpfe abnehmen und Ventilplatte auf Verschmutzungen und Beschädigungen prüfen, gegebenenfalls austauschen.

Verdichter nur dann ausbauen, wenn durch Einbauposition unzugänglich! Dann Vorgehensweise wie in Kapitel 6.

5 Regular maintenance work

It is not basically necessary to perform a complete maintenance of the compressor according to a determined operating time. Despite this, certain routine checks are recommended.

5.1 Recommended routine checks

Generally, simple optical maintenance checks on the installed compressor are sufficient:

- Check the compressor for soiling and leaks.
- Check initial belt tension.
- Check belts for wear.
- Increase idling speed to cause the unit to reach operating temperature. Check the lubrication of the compressor after approx. 15 min.
- Oil level at ¼ to ¾ of sight glass height.
- Measuring of the differential oil pressure (Fig. 1, connection 10) at 1500 rpm and oil temperature beyond 40°C:
  - Difference to suction pressure (nominal value) approx. 1.4 or higher.

5.2 Maintenance tasks

- Drive: Remove tightening strap (Fig. 3, pos. 11) and replace felt ring (Fig. 3, pos. 12).
- Lubrication:
  It is not absolutely necessary to change the refrigeration compressor oil when the plant is operated properly. Impurities stemming from the plant components or operating outside the application ranges are the only things that can cause deposits to form in the lubricating oil, causing it to darken. In this case, change the oil. At the same time, clean the oil filter and magnetic plug. Determine the cause of operating outside of the application area and eliminate it.
  Recommendation: Change oil approximately every 3 years or 10.000 .. 12.000 operating hours along with the oil dryer, if necessary, clean the oil filter and the magnetic plug.
- Suction/pressure range:
  - Clean or replace suction gas filter
  - Remove cylinder heads and check valve plate for soiling and damages, replace if necessary.

Remove compressor only if it cannot be reached due to its mounting position! Then proceed as explained in chapter 6.

5 Entretiens réguliers

En principe, une révision complète du compresseur après une durée de fonctionnement déterminée n'est pas nécessaire. Cependant, certains contrôles de routine sont préconisés.

5.1 Contrôles de routine préconisés

En règle générale, des simples contrôles visuels sur le compresseur installé suffisent:

- Contrôler l'encrassement et les fuites sur le compresseur.
- Contrôler la tension initiale des courroies.
- Vérifier l'usure des courroies.
- Amener le système à la température de fonctionnement avec une vitesse de rotation en marche à vide accélérée. Après environ 15 minutes, contrôler la lubrification du compresseur.
- Niveau d'huile entre ¼ et ¾ de la hauteur du voyant.
- Mesurer la pression différentielle d'huile (fig. 1, raccord 10) pour une vitesse de rotation de 1500 min^{-1} environ et une température d'huile à partir de 40°C:
  - Différence avec pression d'aspiration (point de consigne) environ 1,4 bar ou plus.

5.2 Travaux d'entretien

- Entraînement: retirer le ruban de serrage (fig. 3, pos. 11) et remplacer la bague feutre (fig. 3, pos. 12).
- Lubrification:
  Pour les systèmes exploités dans les règles, la vidange d'huile n'est pas systématiquement nécessaire. Uniquement des impuretés issues des composants du système ou le fonctionnement en dehors des champs d'application peuvent engendrer des dépôts dans l'huile de lubrification et l'assombrir. Dans ce cas, procéder à la vidange d'huile. Par la même occasion, nettoyer le filtre à huile et le bouchon magnétique. Déterminer la cause du fonctionnement en dehors des champs d'application et y remédier.
  Recommandations: environ tous les 3 ans resp. après 10.000 .. 12.000 heures de fonctionnement, procéder à une vidange d'huile; le cas échéant, remplacer le deshydrateur d'huile et nettoyer le filtre à huile et le bouchon magnétique.
- A l'aspiration / au refoulement:
  - Nettoyer ou remplacer le filtre d'aspiration.
  - Retirer les têtes de culasse, contrôler l'encrassement et s'il y a des dégâts; remplacer le cas échéant.

Ne démonter le compresseur que si sa position de montage le rend inaccessible! Procéder alors comme décrit au paragraphe 6.

6 Austausch einzelner Bauteile

Der Austausch einzelner Verdichterbauteile ist nur zu empfehlen, wenn der Schadensumfang genau lokalisiert werden kann. Ansonsten wird ein Verdichteraustausch oder eine komplette Überholung erforderlich. Um schwere Folgeschäden oder den erneuten Ausfall des Verdichters zu vermeiden, muss die eigentliche Ursache für die Störung gefunden und beseitigt werden.
Fehlerdiagnose siehe Kapitel 8.

6.1 Verdichter aus- und einbauen

Wenn die Einbauposition es verlangt, Verdichter aus der Fahrzeuganlage ausbauen, um Wartungsarbeiten durchzuführen (Schraubenanzugsmomente siehe KW-550).

Ausbau

Warnung!
Verdichter kann unter Druck stehen!
Bei unsachgemäßen Eingriffen sind schwere Verletzungen möglich. Verdichter auf **drucklosen** Zustand bringen.

- Kältemittel-Absaugstation an die Service-Anschlüsse der Absperrventile anschließen
- Saug- und Druckabsperrventile zur Anlagenseite schließen.
- Kältemittel mit der Absaugstation bis auf Umgebungsdruck absaugen.
- Riemen entspannen und demontieren.
- Schrauben der Absperrventile am Verdichter lösen.
- Befestigungsschrauben an Bodenplatte lösen.
- Verdichter mit Magnetkupplung aus Fahrzeuganlage herausnehmen.
- Magnetkupplung entfernen (s. 6.2).
- Öl in dafür vorgesehene Auffangwanne ablassen.

Einbau nach erfolgter Instandsetzung

- Verdichter über die Öleinfüll-Anschlüsse mit Öl befüllen.

Achtung!
Es befindet sich bereits Öl im Kreislauf. Deshalb kann es erforderlich sein, einen Teil der Ölfüllung abzulassen.
Ölstand innerhalb markiertem Schauglasbereich halten (¼ Schauglashöhe, bei Neuanlagen ¾ Schauglashöhe).

6 Replacement of single components

Replacing single compressor components is only recommended when the extent of damage can be localized exactly. Otherwise, it will become necessary to replace the compressor or to overhaul it completely. To avoid further damages or repeated compressor failure, the actual cause for the malfunction must be found and eliminated.
For error diagnosis, see chapter 8.

6.1 Removing and installing the compressor

If the mounting position makes it necessary, remove the compressor from the vehicle unit to perform the maintenance tasks (for screw tightening torques, see KW-550).

Removal

Warning!
The compressor may be under pressure!
Incorrect handling can lead to serious injuries. **Relieve the compressor of pressure.**

- Connect the refrigerant recovery station to the service connections of the shut-off valves.
- Close suction and pressure shut-off valves on the unit side.
- Extract the refrigerant using the recovery station until ambient pressure is reached.
- Release belts and dismount.
- Unscrew the shut-off valve screws on the compressor.
- Unscrew the fixing screws on the bottom plate.
- Remove the compressor together with the magnetic clutch from the vehicle unit.
- Remove magnetic clutch (s. 6.2).
- Drain oil out into the appropriate drip pan.

Mounting after having made repairs

- Fill the compressor with oil by means of the oil fill connections.

Attention!
Oil is already inside the circuit. For this reason, it may be necessary to drain some of the oil.
Maintain the oil level between the area marked in the sight glass (¼ of the sight glass height; for new units, ¾ of the sight glass height).

6 Remplacement de pièces individuelles

Le remplacement de pièces individuelles du compresseur n'est conseillé que si l'ampleur des dégâts peut être localisée précisément. Sinon, il est nécessaire de procéder au remplacement du compresseur ou à une remise en état complète. Afin d'éviter de gros dégâts qui pourraient en résulter, ou une nouvelle défaillance du compresseur, il faut rechercher la véritable cause du défaut et y remédier.
Diagnostic des défauts, voir chap. 8.

6.1 Démonter et remonter le compresseur

Si la position de montage le nécessite, extraire le compresseur du circuit afin d'effectuer les travaux d'entretien (couples de serrage des vis, voir KW-550).

Retrait

Avertissement !
Le compresseur peut être sous pression! De graves blessures sont possibles en cas d'interventions inappropriées. **Amener le compresseur à pression atmosphérique.**

- Connecter la station de récupération de fluide frigorigène aux raccords de service des vannes d'arrêt.
- Fermer les vannes d'arrêt à l'aspiration et au refoulement, coté système.
- Retirer le fluide frigorigène avec la station de récupération jusqu'à pression atmosphérique.
- Détendre les courroies et les démonter.
- Desserrer les vis des vannes d'arrêt sur le compresseur.
- Desserrer les vis de fixation sur la plaque de fond.
- Extraire du circuit le compresseur avec l'embrayage électromagnétique.
- Retirer l'embrayage électromagnétique (voir 6.2).
- Laisser écouler l'huile dans un bac de récupération.

Mise en place après remise en état

- Refaire l'appoint en huile du compresseur par les raccords de remplissage d'huile.

Attention !
Il y a déjà de l'huile dans le circuit. Par conséquent, il peut s'avérer nécessaire de retirer une partie de la charge d'huile. Maintenir le niveau d'huile dans les limites du marquage sur le voyant (¼ de la hauteur du voyant; sur nouvelles installations, ¾ de la hauteur du voyant).

- Magnetkupplung auf Welle schieben und festschrauben
- Verdichter mit Magnetkupplung in Fahrzeuganlage einbauen.
- Verdichter (Riemenscheiben) ausrichten.
- Befestigungsschrauben an Bodenplatte anziehen.
- Verdichter gleichzeitig auf Saug- und Hochdruckseite evakuieren, bis bei abgesperrter Pumpe ein Vakuum kleiner als 1,5 mbar bestehen bleibt.
- Absperrventile öffnen – zunächst saugseitig – und anschließend Dichtheitsprüfung vornehmen.
- Während Probelauf bei betriebswarmer Anlage den Ölstand im Schauglas erneut überprüfen.
- Bei Bedarf Kältemittelfüllung ergänzen.

Genaue Vorgehensweise siehe Betriebsanleitung KB-540.

6.2 Magnetkupplung austauschen (Zubehör)

Achtung!
Nur von BITZER zugelassene Kupplungen verwenden.

- 4UFC(Y) .. 6TFC(Y): LA16, KK 73.1
  6PFC(Y) .. 6NFC(Y): LA26, KK 73.4

Austausch am Beispiel der Kupplung LA16 (Abb. 2):

Ausbau

Achtung!
Beim Abziehen der Kupplung darf die Welle keinesfalls durch Einsatz von Hebeln zur Antriebsseite hin verschoben werden!

- Die von BITZER empfohlenen Kupplungen LINNIG LA16, LA26 und LANG KK 73.1 und KK 73.4 haben eine integrierte Abziehvorrichtung:
- Spannschraube (10) soweit nach links drehen, bis der Bund am Seeger-K-Ring (9) aufliegt.
- Spannschraube (10) mit Kraft weiterdrehen, bis sich die Kupplung von der Welle gelöst hat.
- Kupplung abnehmen.

Vorsicht!
Kupplung nicht fallen lassen!
Verletzungsgefahr!

- Magnet (4) abschrauben (4 Befestigungsschrauben).
- Magnet und Kupplung prüfen, ggf. ersetzen.

- Slide the magnetic clutch onto the shaft and screw on tight
- Install the compressor together with the magnetic clutch into the vehicle unit.
- Align the compressor (pulleys).
- Tighten the fixing screws on the bottom plate.
- Evacuate compressor contemporarily from both the suction and high pressure sides until a steady vacuum is reached with the pump blocked off that remains below 1.5 mbar.
- Open shut-off valve – first on the suction side – and afterwards carry out the tightness test.
- Check the oil level in the sight glass while the unit is at operating temperature during the test run.
- Top up refrigerant level, if needed.

For the detailed procedure, see operating instruction KB-540.

6.2 Replacement of magnetic clutch (accessory)

Attention!
Only use clutches approved by BITZER.

- 4UFC(Y) .. 6TFC(Y): LA16, KK 73.1
  6PFC(Y) .. 6NFC(Y): LA26, KK 73.4

Example of replacing the clutch LA16 (Fig. 2):

Removal

Attention!
When removing the clutch, the shaft must not be pushed towards the drive side with the use of levers!

- The clutches recommended by BITZER LINNIG LA16, LA26 and LANG KK 73.1 and KK 73.4 have an integrated pulling device:
- Turn the straining screw (10) to the left until the collar of the Seeger-K-ring (9) lies flat.
- Further turn the straining screw (10) hard enough until the clutch has released itself from the shaft.
- Remove the clutch.

Caution!
Do not drop the clutch!
Risk of injury!

- Screw off the magnet (4) (4 fixing screws).
- Check magnet and coupling, replace if necessary.

- Glisser l'embrayage électromagnétique sur l'arbre et serrer les vis de maintien.
- Réinstaller le compresseur avec l'embrayage électromagnétique dans le circuit.
- Aligner le compresseur (poulies à gorges).
- Serrer les vis de fixation sur la plaque de fond.
- Procéder à la mise à vide du compresseur, simultanément à l'aspiration et au refoulement, jusqu'au maintien d'un vide inférieur à 1,5 mbar quand la pompe est hors service.
- Ouvrir les vannes d'arrêt – d'abord à l'aspiration – puis procéder à l'essai d'étanchéité.
- Recontrôler le niveau d'huile dans le voyant durant la période d'essai, le système étant à température de service .
- Si nécessaire, faire l'appoint de la charge en fluide frigorigène.

Voir instructions de service KB-540 pour plus de détails sur la façon de procéder.

6.2 Remplacer l'embrayage électromagnétique (accessoire)

Attention !
N'utilisez que des accouplements homologués par BITZER.

- 4UFC(Y) .. 6TFC(Y): LA16, KK 73.1
  6PFC(Y) .. 6NFC(Y): LA26, KK 73.4

Remplacement suivant l'exemple de l'embrayage LA16 (fig. 2):

Retrait

Attention !
Lors du retrait de l'embrayage, veiller à ce que, en aucun cas, l'arbre ne soit repoussé vers le coté de l'entraînement sous l'effort exercé par un bras de levier!

- Les embrayages préconisés par BITZER, LINNIG LA16, LA26 et LANG KK73.1 et KK73.4 ont un dispositif de démontage intégré:
- Tourner la vis de tension (10) vers la gauche jusqu'à ce que l'épaulement vienne buter sur le circlip (9).
- Continuer à tourner fermement la vis de tension jusqu'à ce que l'embrayage décolle de l'arbre.
- Retirer l'embrayage.

Prudence !
Ne pas laisser tomber l'embrayage!
Risque de blessures.

- Dévisser l'aimant (4) (4 vis de fixation).
- Contrôler l'aimant et l'embrayage, et remplacer le cas échéant.

Einbau

Achtung!
Schrauben und Muttern mit vorgeschriebenen Drehmomenten anziehen.

- Magnet (4) am Gehäuse befestigen. Schrauben (5) einstecken und kreuzweise anziehen (Anzugsmoment 25 Nm).
- Scheibenfeder (2) montieren.
- Spannschraube (10) einfetten. Rotor (6) auf Welle und Magnet (4) schieben. Spannschraube (10) in Wellenende einschrauben (Anzugsmoment 85 Nm).
- Riemenscheibe über die Stiftschrauben der Kupplung schieben und mit Muttern (7) festschrauben (Anzugsmoment 25 Nm).

Mounting

Attention!
Tighten bolts and nuts to the specified torques.

- Fasten magnet (4) to housing. Insert bolts (5) and tighten crosswise (tightening torque 25 Nm).
- Mount woodruff key (2).
- Lubricate straining screw (10). Slide rotor (6) onto shaft and magnet (4). Screw straining screw (10) into shaft end (tightening torque 85 Nm).
- Slide pulley over the pin screws of the clutch and screw down with nuts (7) (tightening torque 25 Nm).

Montage

Attention !
Serrer les vis et les écrous avec le couple de serrage requis.

- Fixer l'aimant (4) au carter. Introduire les vis (5) et serrer en croix (couple de serrage 25 Nm).
- Monter clavette disque (2).
- Huiler la vis de tension (10). Glisser le rotor (6) sur l'arbre et l'aimant (4). Introduire la vis de tension (10) en bout d'arbre et serrer (couple de serrage 85 Nm).
- Glisser la poulie au-dessus des goujons de l'embrayage et fixer avec les écrous (7) (couple de serrage 25 Nm).

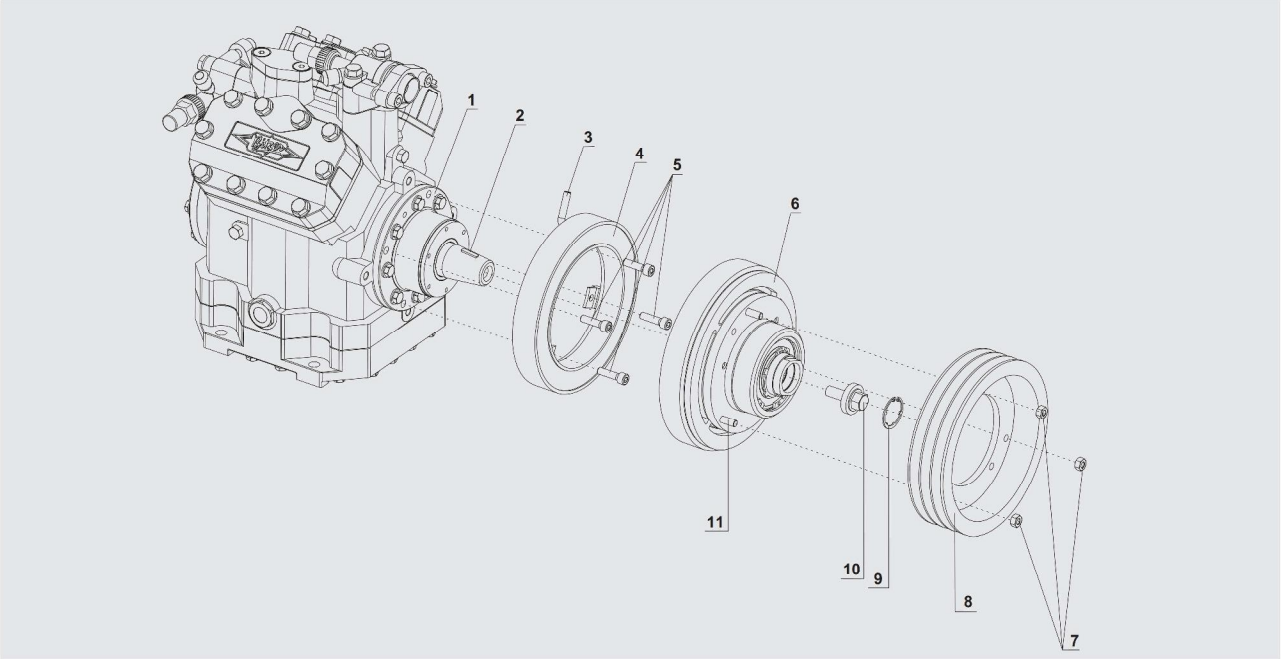

Abb. 2 Elektromagnet-Kupplung montieren

1 Lagerflansch
2 Scheibenfeder
3 Kabel
4 Magnet
5 Schrauben M8x30 DIN 912
6 Rotor
7 Muttern M8
8 Riemenscheibe
9 Seeger-K-Ring JK36 DIN 984
10 Spannschraube
11 Stiftschrauben M8x20

Fig. 2 Mounting the electro-magnetic clutch

1 Bearing flange
2 Woodruff key
3 Cable
4 Magnet
5 Screws M8x30 DIN 912
6 Rotor
7 Nuts M8
8 Pulley
9 Seeger-K-ring
10 Straining screw
11 Pin screws M8x20

Fig. 2 Montage de l'embrayage électromagnétique

1 Couvercle de palier
2 Clavette disque
3 Câble
4 Aimant
5 Vis M8 x 30 DIN 912
6 Rotor
7 Ecrous M8
8 Poulie
9 Circlip JK36 DIN984
10 Vis de tension
11 Goujons M8x20

Achtung!
Riemenscheibe muss sich von Hand drehen lassen, ohne am Magnet zu schleifen!

- Kabel (3) anschließen (polungsunabhängig), dabei von heißen Teilen fernhalten (t_{max} = 105°C).

Anleitungen für den Austausch anderer Kupplungen auf Anfrage.

6.3 Wellenabdichtung austauschen

Warnung!
Verdichter kann unter Druck stehen!
Bei unsachgemäßen Eingriffen sind schwere Verletzungen möglich.
Verdichter auf **drucklosen** Zustand bringen.

Vorbereitende Arbeiten

- Verdichter auf drucklosen Zustand bringen (siehe 6.1)
- Magnetkupplung entfernen (siehe 6.2).

Wellenabdichtung ausbauen

- Befestigungsschrauben des Abschlussdeckels herausdrehen.
- Zwei dieser Schrauben in die Abdrückgewinde eindrehen und durch gleichmäßiges Anziehen den Abschlussdeckel vom Gehäuse abdrücken.
- Abschlussdeckel mit der Hand von der Welle abziehen. Durch die innen am Abschlussdeckel sitzende Dichtscheibe wird meistens auch das rotierende Teil der Wellenabdichtung mit herausgezogen.
- Bleibt nach Abziehen des Abschlussdeckels die Dichtscheibe auf der Welle, rotierendes Teil der Wellenabdichtung und Dichtscheibe von Hand von der Welle abziehen.
- Gegenring der Wellenabdichtung aus dem Abschlussdeckel herausdrücken, ggf. mit leichten Hammerschlägen.

Achtung!
Dichtring am Abschlussdeckel nicht beschädigen!

- Bandage und Filzring entfernen.

Attention!
You must be able to turn the pulley by hand without it rubbing against the magnet!

- Connect cable (3) (polarity is irrelevant here), and keep away from hot parts (t_{max} = 105°C).

Instructions for replacing other clutches upon request.

6.3 Replacement of shaft seal

Warning!
The compressor may be under pressure!
Incorrect handling can lead to serious injuries.
Relieve the compressor of pressure.

Preparatory tasks

- Relieve the compressor of pressure (see 6.1)
- Remove magnetic clutch (see 6.2).

Remove shaft seal

- Screw out the fastening screws of the sealing cover.
- Screw in two of these screws into the forcing thread and, by pulling evenly, push the sealing cover away from the housing.
- Pull off the sealing cover from the shaft by hand. The rotating part of the shaft seal is usually pulled off along with the sealing cover because of sticking to the interior blanking plate.
- If after pulling off the sealing cover the blanking plate remains on the shaft, remove the rotating part of the shaft seal and the blanking plate from the shaft by hand.
- Push the stationary ring of the shaft seal out of the sealing cover, hitting it slightly with a hammer if necessary.

Attention!
Be careful not to damage the gasket ring on the sealing cover!

- Remove bandage and felt ring.

Attention !
La poulie doit pouvoir être tournée à la main sans frotter contre l'aimant!

- Raccorder le câble (3) (polarité ne joue aucun rôle), et le tenir à l'écart des parties chaudes (t_{max} = 105°C).

Instructions pour le remplacement d'autres embrayages sur demande.

6.3 Remplacer la garniture d'étanchéité

Avertissement !
Le compresseur peut être sous pression! Risque de blessures graves en cas d'interventions inappropriées.
Amener le compresseur à pression atmosphérique.

Travaux préliminaires

- Amener le compresseur à pression atmosphérique (voir 6.1).
- Retirer l'embrayage électromagnétique (voir 6.2).

Démonter la garniture d'étanchéité

- Dévisser les vis de fixation du couvercle de recouvrement.
- Introduire deux de ces vis dans les filetages de dégagement et serrer uniformément pour décoller le couvercle de recouvrement du carter.
- Glisser à la main le couvercle de recouvrement au-dessus de l'arbre. A cause du disque d'étanchéité plaqué à l'intérieur du couvercle de recouvrement, la partie tournante de la garniture d'étanchéité est généralement retirée avec.
- Si après le retrait du couvercle de recouvrement, le disque d'étanchéité est resté sur l'arbre, retirer celui-ci à la main ainsi que la partie tournante de la garniture d'étanchéité.
- Presser la bague fixe de la garniture d'étanchéité hors du couvercle de recouvrement; le cas échéant, avec des petits coups de maillet.

Attention !
Ne pas endommager la bague d'étanchéité du couvercle de recouvrement!

- Retirer le ruban de serrage et la bague feutre.

Teile überprüfen

- Abschlussdeckel, Dichtscheibe und Nut des Radialdichtrings reinigen.
- Befinden sich Ablagerungen auf der Welle, müssen diese entfernt werden. Hierzu Putztücher oder ölgetränkte Polierleinen (bzw. Schleifleinen mit Körnung 280 oder feiner) verwenden.
- Falls die Gleitringe beschädigt sind oder starke Verschleißspuren aufweisen, empfiehlt sich ein kompletter Wechsel; ebenso bei Cu-Plattierung und Ablagerungen von Ölkohle.
- Werden lediglich die O-Ringe erneuert, vor Einlegen neuer Ringe die entsprechenden Nuten sorgfältig reinigen und anschließend mit Kältemaschinenöl einölen.

Achtung!
Nur neue O-Ringe verwenden.

Examine the parts

- Clean the sealing cover, blanking plate and groove of the radial gasket ring.
- If there are any deposits on the shaft, they must be removed. For this job, use cleaning cloths or oil-soaked polishing cloths (or sanding cloth with grain 280 or finer).
- If the sliding ring is damaged or heavily worn, it is recommended to make a complete replacement, likewise in the case of copper plating and oil carbon deposits.
- If only the O-rings are replaced, carefully clean their respective grooves before inserting new rings and lubricate thereafter with refrigeration compressor oil.

Attention!
Use only new O-rings.

Contrôler les pièces

- Nettoyer le couvercle de recouvrement, le disque d'étanchéité et la rainure de la bague d'étanchéité radiale.
- S'il y a des dépôts sur l'arbre, ceux ci doivent être enlevés. Utiliser pour cela des chiffons ou des toiles de polissage imbibées d'huile (respectivement des toiles abrasives avec un grain de 280 ou plus fin).
- Si les bagues de glissement sont endommagées ou portent des traces apparentes d'usure, il est conseillé de procéder au remplacement complet; agir de même en cas de cuivrage ou de dépôts de calamine.
- S'il est prévu de ne remplacer que les joints toriques, nettoyer soigneusement les gorges concernées et huiler celles-ci avec de l'huile pour machines frigorifiques avant la pose des nouveaux joints.

Attention !
Ne réutiliser que des nouveaux joints toriques.

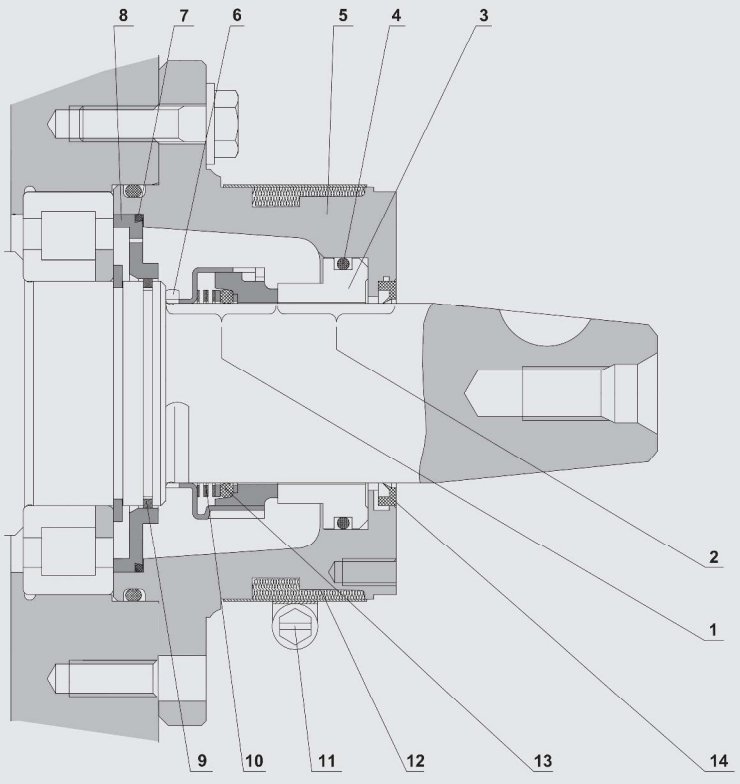

1 Rotierende Einheit
Rotating unit
Unité tournante
2 Statische Einheit
Stationary unit
Unité statique
3 Statischer Gleitring (Gegenring)
Static sliding ring (stationary ring)
Bague de glissement statique (bague fixe)
4, 7, 13 O-Ring
O-ring
Joint torique
5 Abschlussdeckel
Sealing cover
Couvercle de recouvrement
6 Stift
Pin
Téton
8 Dichtscheibe
Blanking plate
Disque d'étanchéité
9 Radialdichtring
Rotary shaft seal
Bague d'étanchéité radiale
10 Kohlering (rotierender Gleitring)
Carbon ring (rotating slide ring)
Bague en carbone (bague de glissement tournante)
11 Spannband
Tightening strap
Ruban de serrage
12 Filzring
Felt ring
Bague feutre
14 Radial-Wellendichtring
Rotary shaft gasket ring
Bague d'étanchéité radiale de l'arbre

Abb. 3 Schnitt durch die Wellenabdichtung

Fig. 3 Cross-section of the shaft seal

Fig. 3 Garniture d'étanchéité en coupe

Achtung!
Gleitringe sind bruchempfindlich. Ersatz-Wellenabdichtung bis unmittelbar vor dem Einbau in der Schutzfolie belassen. Gleitflächen nicht berühren.

Attention!
Sliding rings are susceptible to breakage. Keep the replacement shaft seal inside its protective foil until immediately before installing. Do not touch the sliding faces.

Attention !
Les bagues de glissement sont fragiles. Garder la garniture d'étanchéité de rechange de son emballage jusqu'au dernier moment. Ne pas toucher les surfaces de glissement.

Wellenabdichtung einbauen

Achtung!
Schrauben und Muttern mit vorgeschriebenen Drehmomenten anziehen.

- Neuen Radialdichtring (9) in die Nut der Welle einlegen.
- Neuen O-Ring (7) in die Aussparung der Dichtscheibe (8) einlegen. Dichtscheibe auf die Welle schieben, Ölbohrung oben. Der O-Ring muss in Richtung Wellenende zeigen.
- Neues rotierendes Teil der Wellenabdichtung innen mit sauberem Kältemaschinenöl einölen und mit leichter Drehung auf die Welle aufschieben. Bis zum Anschlag auf den Wellenbund drücken. Dabei beachten, dass der auf der Welle sitzende Stift in die Aussparung einrastet.
- Neuen Gegenring in den Abschlussdeckel eindrücken. Dichtfläche nicht beschädigen!
- Neuen O-Ring (4) in die Nut des Abschlussdeckels einlegen. Abschlussdeckel auf die Welle schieben und durch gleichmäßiges Anziehen der Schrauben montieren (Anzugsmoment 25 Nm). Die Austrittsbohrung des Leckölsmuss sich in der 1-Uhr-Stellung befinden.
- Neuen Filzstreifen und Spannband montieren.
- Verdichterwelle einige Umdrehungen von Hand durchdrehen
- Verdichter evakuieren.
- Absperrventile öffnen – zunächst saugseitig – und anschließend Dichtheitsprüfung vornehmen.
- Dichtheitsprüfung durchführen.
- Magnetkupplung montieren (siehe 6.2).

Mounting the shaft seal

Attention!
Tighten bolts and nuts with the specified torques.

- Place the new radial gasket ring (9) into the groove of the shaft.
- Place the new O-ring (7) into the recess of the blanking plate (8). Slide the blanking plate onto the shaft, oil bore pointing up. The O-ring must point in the direction of the shaft end.
- Lubricate the inside of the new rotating part of the shaft seal with clean refrigeration compressor oil, and slide it onto the shaft with a slight turn. Press onto the shaft collar up to the stop. Be sure that the pin on the shaft engages in the recess.
- Press the new stationary ring into the sealing cover. Do not damage the sealing surface!
- Place the new O-ring (4) into the groove of the sealing cover. Slide the sealing cover onto the shaft and mount by tightening the screws evenly (tightening torque 25 Nm). The outlet bore for the oil leakage must be in 1 o'clock position.
- Mount new felt tape and tightening strap.
- Rotate the compressor shaft a few revolutions by hand.
- Evacuate compressor.
- Open shut-off valve – first on the suction side – and afterwards carry out the tightness test.
- Perform a tightness test.
- Mount magnetic clutch (see 6.2).

Remonter la garniture d'étanchéité

Attention !
Resserrer les vis et les écrous avec les couples de serrage indiqués.

- Introduire la nouvelle bague d'étanchéité radiale (9) dans la gorge de l'arbre.
- Poser le nouveau joint torique (7) dans l'évidement du disque d'étanchéité (8). Glisser le disque d'étanchéité sur l'arbre, trou de passage de l'huile en haut. Le joint torique doit montrer sur le bout de l'arbre.
- Huiler la nouvelle partie tournante de la garniture d'étanchéité avec de l'huile pour machines frigorifiques propre, puis la glisser sur l'arbre avec une légère rotation. La pousser jusqu'à ce qu'elle bute sur l'épaulement de l'arbre. Veillez à ce que le téton fixé sur l'arbre vienne s'introduire dans l'évidement.
- Presser la nouvelle bague fixe dans le couvercle de recouvrement. Veiller à ne pas détériorer la surface d'étanchéité!
- Poser le nouveau joint torique (4) dans la gorge du couvercle de recouvrement. Glisser le couvercle de recouvrement sur l'arbre et le fixer en serrant uniformément les vis (couple de serrage 25 Nm). La position du percement pour l'évacuation de l'huile de fuite doit se trouver à 1 heure.
- Monter une nouvelle bande feutre et un nouveau ruban de serrage.
- Tourner plusieurs fois l'arbre du compresseur à la main.
- Mettre le compresseur à vide.
- Ouvrir les vannes d'arrêt – d'abord à l'aspiration – puis procéder à l'essai d'étanchéité.
- Effectuer l'essai d'étanchéité.
- Monter l'embrayage électromagnétique (voir 6.2).

6.4 Lagerdeckel / Ölpumpe austauschen (Abb. 1, Seite 4)

Teile nur austauschen, falls tatsächlich ein Schaden an der Ölpumpe oder starker Verschleiß des Wellenlagers festgestellt wird.

Achtung!
Ungenügender Öldruck kann auch durch hohe Kältemittelanreicherung im Öl oder Ölverlagerung ins System verursacht werden.
Überprüfung siehe 5.1.

- Verdichter auf drucklosen Zustand bringen (siehe 6.1).
- Ölpumpendeckel lösen, Ölpumpe (12) entnehmen.
- Lagerdeckel (11) und Dichtung entfernen.
- Alle Teile reinigen. Ölpumpe, Öldruckregulierventil und Lagerfläche prüfen, ggf. austauschen.
- Lagerdeckel mit neuer, nicht eingeölter Dichtung montieren. Schrauben gleichmäßig über Kreuz anziehen.
- Innenläufer, Außenläufer und Umsteuergehäuse der Ölpumpe einölen und so auf die Welle schieben, dass der Innenläufer in die Nut der Welle greift.
- Ölpumpendeckel mit neuem O-Ring montieren. Dabei muss die TOP-Markierung nach oben zeigen und das Umsteuergehäuse in die Aussparung des Deckels greifen.

6.4 Bearing cover / oil pump replacement (Fig. 1, page 4)

Only replace the parts if damage to the oil pump or extreme wear of the shaft bearing has actually been detected.

Attention!
Insufficient oil pressure can also be caused by a too high refrigerant concentration in the oil or oil migration in the system.
For checking, see 5.1.

- Relieve the compressor of pressure (see 6.1).
- Remove the oil pump cover; remove oil pump (12).
- Remove bearing cover (11) and gasket.
- Clean all parts. Check oil pump, oil pressure regulating valve and bearing surface, replace if necessary.
- Mount bearing cover with a new, not lubricated gasket. Screw the bolts in crosswise and tighten them uniformly
- Lubricate the inner and outer rotors along with the reversing part of the oil pump and slide onto shaft so that the inner rotor finds its way into the shaft groove.
- Mount oil pump cover with new O-ring. The TOP marking must point upwards and the reversing part reach into the recess of the cover.

6.4 Remplacer le couvercle de palier / la pompe à huile (fig. 1, page 4)

Ne remplacer ces pièces que si vraiment un dégât à la pompe à huile ou une forte usure du palier de l'arbre a été constaté.

Attention !
Une pression d'huile insuffisante peut être due à une concentration élevée de fluide frigorigène dans l'huile ou à une migration dans le système. Contrôle voir 5.1.

- Amener le compresseur à pression atmosphérique (voir 6.1).
- Démonter le couvercle de la pompe à huile puis retirer celle-ci (12).
- Retirer le couvercle de palier (11) et le joint.
- Nettoyer toutes les pièces. Contrôler la pompe à huile, la vanne de régulation de la pression d'huile et la surface du palier; les remplacer le cas échéant.
- Remonter le couvercle de palier doté d'un nouveau joint qui n'aura pas été huilé. Serrer les vis en croix, de façon uniforme.
- Huiler le pignon interne, le pignon externe et le boîtier d'inversion de la pompe et glisser sur l'arbre de façon à ce que le pignon interne prenne prise dans la gorge de l'arbre.
- Remonter le couvercle de la pompe à huile doté d'un nouveau joint torique. S'assurer que le marquage TOP montre vers le haut et que le boîtier d'inversion prend prise dans l'évidement du couvercle.

6.5 Druckentlastungsventil austauschen

Das Druckentlastungsventil (S. 4, Abb. 1, Pos. 6) ist eine Sicherheitseinrichtung und muss nach Ansprechen sowie bei Defekt ausgetauscht werden.

Der Öffnungsbeginn des Ventils liegt bei 26 bar Differenzdruck. Wenn das Ventil bei niedrigerem Druck auslöst, hat es vermutlich bereits mehrfach geöffnet. In diesem Fall muss zunächst die Ursache für den häufig auftretenden Überdruck beseitigt werden, bevor das Ventil ausgetauscht wird (z.B. geschlossenes Druckabsperrventil beim Start, blockierte Rückschlagventile oder Flüssigkeitsverlagerung in den Zylinderkopf durch Rückkondensation).

- Verdichter auf drucklosen Zustand bringen (siehe 6.1).
- Blindflansch (oder das alternativ dort montierte Saugabsperrventil und der Saugfilter) über Ölpumpe entfernen.
- Druckentlastungsventil austauschen (Schlüsselweite SW 22).

6.5 Replacement of pressure relief valve

The pressure relief valve (p. 4, Fig. 1, pos. 6) is a safety device and must be replaced after having been triggered or when defective.

The valve starts to open at a differential pressure of 26 bar. If the valve opens at a lower pressure, it probably means that it has opened before. In this case, it is necessary to first eliminate the cause of the frequently occurring overpressure before substituting the valve (e.g., closed pressure shut-off valve at startup, blocked check valve or liquid migration into the cylinder head by back condensation).

- Relieve the compressor of pressure (see 6.1).
- Remove the blind flange (or the optionally mounted suction shut-off valve and the suction filter) above the oil pump.
- Replace pressure relief valve (jaw span SW 22).

6.5 Remplacer la soupape de décharge

La soupape de décharge (page 4, fig. 1, pos. 6) est un organe de sécurité et doit être remplacée après avoir été sollicitée ou en cas de défaut.

Le début de l'ouverture de la soupape se situe aux alentours de 26 bar de pression différentielle. Si la soupape déclenche à une pression inférieure, elle a probablement été sollicitée plusieurs fois auparavant. Dans ce cas, il faut d'abord remédier à la cause de cette surpression répétitive avant de remplacer la soupape (par ex. vanne d'arrêt au refoulement fermée au démarrage, clapets de retenue bloqués ou migration de liquide dans les têtes de culasse par retour de condensation).

- Amener le compresseur à pression atmosphérique (voir 6.1).
- Retirer la bride pleine au-dessus de la pompe (ou la vanne d'arrêt et le filtre d'aspiration qui peuvent être à cet endroit).
- Remplacer la soupape de décharge (taille de la clé: SW 22).

6.6 Ventilplatte / Zylinderkopf-dichtung austauschen

- Verdichter in drucklosen Zustand bringen.
- Zylinderkopf und Ventilplatte demontieren (ggf. mit Gummihammer lösen). Alle Dichtflächen sorgfältig reinigen.
- Ventilplatte prüfen, bei Schäden komplett austauschen. Ursache ermitteln und beseitigen.
- Zylinderkopf, Ventilplatte und neue Dichtungen korrekt aufsetzen. In ungünstiger Einbaulage Montagestifte zur Hilfe nehmen.
- Schrauben in der dargestellten Reihenfolge in zwei Stufen anziehen (Anzugsmoment: 70 Nm, siehe Abbildung 4).

6.6 Replacement of valve plate / cylinder head gasket

- Relieve the compressor of pressure.
- Dismount cylinder head and valve plate (using a rubber hammer, if necessary). Carefully clean all sealing surfaces.
- Check valve plate; exchange entire valve plate if damaged. Determine the cause and eliminate it.
- Correctly mount the cylinder head, valve plate and new gaskets. If located in an inconvenient mounting position, use the mounting pins.
- Tighten the bolts in the illustrated sequence in two steps (tightening torque: 70 Nm, see Figure 4).

6.6 Remplacer la plaque à clapets / le joint de tête de culasse

- Amener le compresseur à pression atmosphérique.
- Démonter la tête de culasse et la plaque à clapets (décoller, si nécessaire, avec un maillet en caoutchouc). Nettoyer soigneusement toutes les surfaces d'étanchéité.
- Contrôler la plaque à clapets; à remplacer entièrement en cas de dégâts. Déterminer la cause et y remédier.
- Repositionner correctement les nouveaux joints, la plaque à clapets et la tête de culasse. En cas de position de montage difficile, utiliser des guides de montage.
- Serrer les vis en deux étapes, dans l'ordre indiqué (couple de serrage: 70 Nm, voir figure 4).

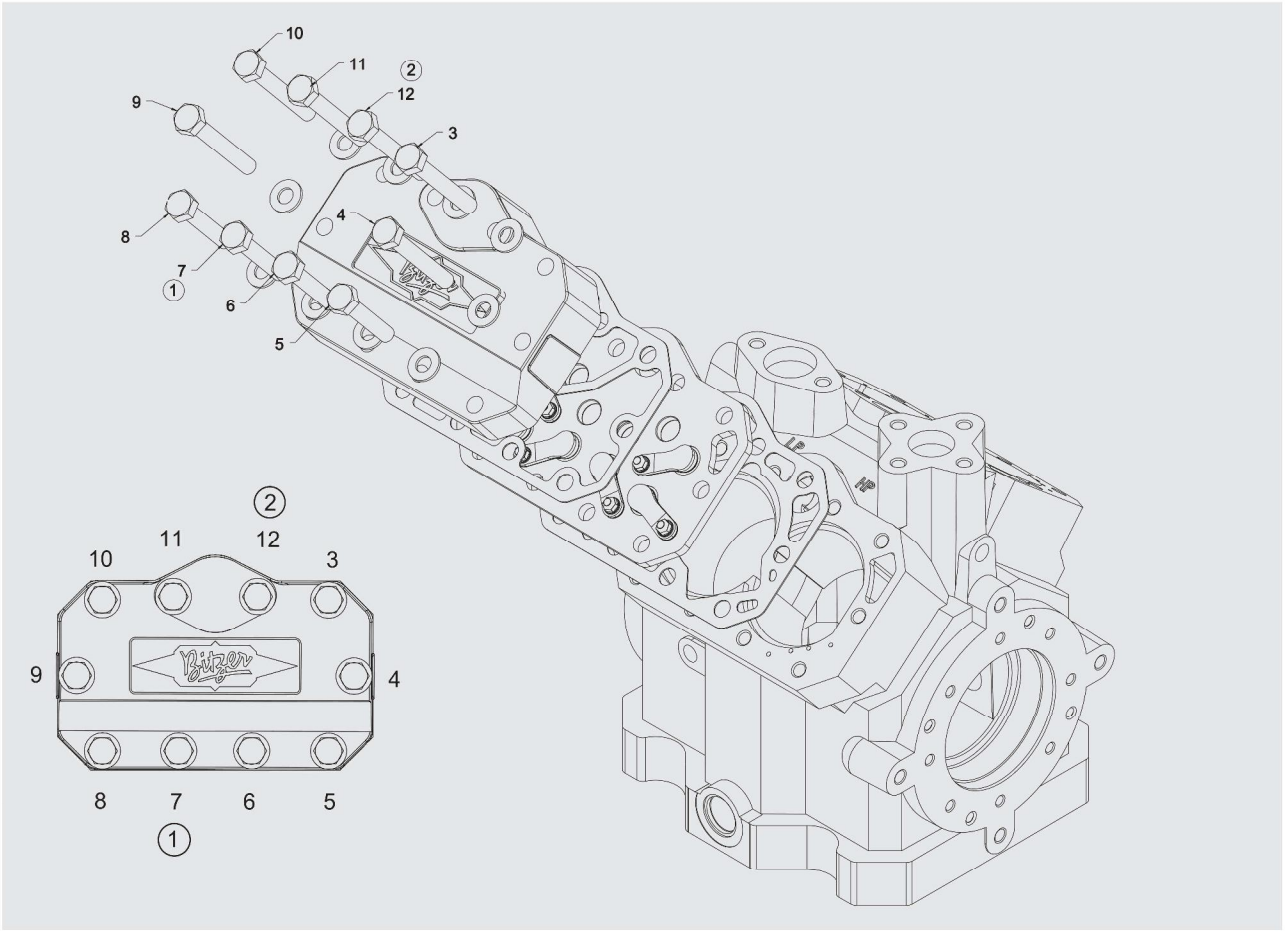

Abb. 4 Ventilplatte / Zylinderkopf dichtung austauschen

Fig. 4 Replacement of valve plate / cylinder head gasket

Fig. 4 Remplacer la plaque à clapets / le joint de tête de culasse

6.7 Leistungsregelung prüfen / austauschen (Zubehör)

- Elektrische Prüfung der Spule, ggf. austauschen.

Zur eventuell erforderlichen Überprüfung der Mechanik Flansch bei drucklosem Verdichter vom Zylinderkopf abmontieren und in folgenden Punkten prüfen:

- Prüfung der Gaskanäle auf Verstopfung, ggf. reinigen.
- Steuerkolben im Zylinderkopf muss sich manuell bewegen lassen und durch Federkraft in Ausgangsstellung zurückgehen. Im Regelfall empfiehlt sich bei Defekt ein kompletter Austausch des Zylinderkopfes.

7 Komplette Überholung des Verdichters

7.1 Demontage des Verdichters

Verdichter zerlegen (Abb. 5)

Wenn nach langer Laufzeit Verschleißerscheinungen bemerkbar werden, empfiehlt sich im Regelfall der Austausch des Verdichters. Sollte im Einzelfall eine komplette Überholung des Verdichters vor Ort vorgezogen werden, den Verdichter nach folgender Anleitung demontieren.

- Verdichter durch Absaugen des Kältemittels drucklos machen und aus der Fahrzeuganlage ausbauen (siehe 6.1).

⚠ **Sicherheitshinweis!**
Montagearbeiten an Verdichtern, die unter Überdruck stehen, können schwerwiegende Verletzungen zur Folge haben.

- Magnetstopfen (29) öffnen und Öl ablassen. Ölfilter (27) entfernen.
- Ausbau der Wellenabdichtung: siehe Abschnitt 6.3.
- Seegerring (47), Dichtscheibe (67), O-Ring (66) und Gleitring (6) entfernen.
- Absperrventile SL (4), DL (5) einschließlich der Zwischenflansche abschrauben, Saugfilter (33) herausnehmen.
- Zylinderköpfe / Ventilplatten entfernen: siehe Abschnitt 6.6, ggf. Leistungsregler entfernen: siehe Abschnitt 6.7.

6.7 Check / replace capacity control (accessory)

- Electrical check of the coil, replace if necessary.

In the event of having to check the mechanics, remove the flange from the cylinder head while the compressor is relieved of pressure, and check the following points:

- Check the gas channels for clogging, clean if necessary.
- The control piston in the cylinder head must be able to be moved by hand and to go back to its initial position by spring force. Generally, it is recommended to change the complete cylinder head in case of defect.

7 Complete overhaul of the compressor

7.1 Dismounting the compressor

Disassemble compressor (Fig. 5)

When signs of wear become noticeable after a longer running time, it is generally recommended to replace the compressor. Should it be preferred in individual cases to make a complete overhaul of the compressor, dismount the compressor according to the following directions.

- Relieve the compressor of pressure by extracting the refrigerant and remove it from the vehicle unit (see 6.1).

⚠ **Safety instruction!**
Performing mounting tasks on compressors that are under overpressure can lead to serious injuries.

- Open magnetic plug (29) and drain off oil. Remove oil filter (27).
- Dismount the shaft seal: see section 6.3.
- Remove Seeger ring (47), blanking plate (67), O-ring (66) and sliding ring (6).
- Screw off shut-off valve SL (4), DL (5) together with the intermediate flanges; remove suction filter (33).
- Remove cylinder heads / valve plates: see section 6.6, remove capacity regulator, if necessary: see section 6.7.

6.7 Contrôler/ remplacer la régulation de puissance (accessoire)

- Contrôle électrique de la bobine; remplacer le cas échéant.

En vue d'un éventuel contrôle, retirer la bride mécanique de la tête de culasse après avoir amené le compresseur à pression atmosphérique, et vérifier les points suivants:

- Contrôler que les canaux de gaz ne sont pas obturés; nettoyer le cas échéant.
- Le piston de commande dans la tête de culasse doit pouvoir être bougé manuellement et doit revenir dans sa position initiale sous l'effet du ressort. En cas de défaut, le remplacement complet de la tête de culasse est généralement préconisé.

7 Remise en état complète du compresseur

7.1 Démontage du compresseur

Mettre le compresseur en pièces (fig. 5)

Si des signes d'usure apparaissent après une longue durée de fonctionnement, il est généralement recommandé de remplacer le compresseur. Dans le cas spécifique d'une remise en état complète sur site, démonter le compresseur en se référant aux instructions suivantes:

- Amener le compresseur à pression atmosphérique par retrait du fluide frigorigène et l'extraire du circuit (voir 6.1).

⚠ **Recommandation de sécurité !**
Des travaux de montage sur des compresseurs sous pression peuvent engendrer de graves blessures.

- Ouvrir le bouchon magnétique (29) et faire la vidange d'huile. Retirer le filtre à huile (27).
- Démontage de la garniture d'étanchéité: voir paragraphe 6.3.
- Retirer le circlip (47), le disque d'étanchéité (67), le joint torique (66) et la bague de glissement (6).
- Dévisser les vannes d'arrêt, asp. (4) et ref. (5), avec les brides intermédiaires et extraire le filtre d'aspiration (33).
- Retirer les têtes de culasse / plaques à clapets: voir paragraphe 6.6; le cas échéant, retirer le régulateur de puissance: voir paragraphe 6.7.

- Ölpumpe / Lagerdeckel entfernen: siehe Abschnitt 6.4.
- Bodenplatte (31) abschrauben.
- Welle (11) und Pleuel/Kolben (7) entfernen: Ausgleichsgewicht (51) abschrauben, Welle unter Drehen herausziehen (nicht verkanten), Pleuel/Kolben nach unten herausziehen.
- Zylinderlaufbuchse aus Zylinderbohrung nach oben herausziehen (für Wiederverwendung Position kennzeichnen).
- Blindflansch (34) und Druckentlastungsventil (40) entfernen.
- Gasausgleichsventil (48) und Schauglas (30) entfernen.
- Zylinderrollenlager (12) mit geeigneter Vorrichtung aus dem Gehäuse drücken.
- Innenring des Zylinderrollenlagers unter Erwärmung von der Welle (11) abziehen.

- Remove oil pump / bearing cover: see section 6.4.
- Screw off the bottom plate (31).
- Remove shaft (11) and connecting rod/piston (7). Screw off balance weight (51), pull out the shaft while turning (avoid jamming), pull out connecting rod/piston downwards.
- Pull out the cylinder sleeve from the cylinder bore towards the top (mark the position for re-use)
- Remove the blind flange (34) and pressure relief valve (40).
- Remove the gas equalizing valve (48) and sight glass (30).
- Push the cylinder roller bearing (12) out of the housing using the appropriate device.
- Remove the inner ring of the cylinder roller bearing by heating up the shaft (11).

- Retirer la pompe à huile / couvercle de palier : voir paragraphe 6.4.
- Dévisser la plaque de fond (31).
- Retirer l'arbre (11) et les bielles / pistons (7) : dévisser le contrepoids d'équilibre (51), sortir l'arbre en le tournant (sans le coincer), extraire les bielles / pistons par le bas.
- Extraire par le haut les chemises de cylindre des alésages (en cas de réemploi, identifier leur position).
- Retirer la bride pleine (34) et la soupape de décharge (40).
- Retirer la soupape d'égalisation de pression des gaz (48) et le voyant (30).
- Avec un dispositif approprié, presser le roulement à rouleaux cylindriques (12) hors du carter.
- Retirer la bague interne du roulement à rouleaux cylindriques en réchauffant l'arbre (11).

7.2 Auf Schäden und Verschleiß prüfen

Nach vollständiger Demontage des Verdichters alle Teile sorgfältig auf Schäden und Verschleiß prüfen. Folgende Teile nach langer Laufzeit generell austauschen:

- Zylinderrollenlager, Lagerdeckel
- Kolben, Pleuel
- Ventilplatten
- Wellenabdichtung
- Öldruckregulierventil
- Druckentlastungsventil

Durch höchste Präzision bei der Fertigung sind Original-Ersatzteile von BITZER universell verwendbar; individuelle Zuordnung ist nicht erforderlich.

Dichtungen, O-Ringe und Schrauben grundsätzlich nicht wiederverwenden.

Bei der Wiederverwendung gebrauchter Teile die Toleranzbereiche sowie folgende Kriterien beachten:

7.2 Checking for damage and wear

After complete disassembling of the compressor, check all parts carefully for damage and wear. Generally replace the following parts after a longer running time:

- Cylinder roller bearing, bearing cover
- Piston, connecting rod
- Valve plates
- Shaft seal
- Oil pressure regulating valve
- Pressure relief valve

BITZER original spare parts can be used universally due to the highest precision during production; no individual allocation is necessary.

Basically, O-rings and screws are not to be reused.

When reusing used parts, observe the tolerance ranges and the following criteria:

7.2 Evaluer les dégâts et l'usure

Après démontage complet du compresseur, contrôler soigneusement toutes les pièces pour évaluer l'ampleur des dégâts et de l'usure. Après une longue durée de fonctionnement, remplacer systématiquement les pièces suivantes :

- Roulement à rouleaux cylindriques, couvercle de palier.
- Pistons, bielles.
- Plaques à clapets.
- Garniture d'étanchéité.
- Vanne de régulation de la pression d'huile.
- Soupape de décharge.

En raison de la grande précision de fabrication, les pièces de rechange originales de BITZER sont utilisables de façon universelle, une attribution spécifique n'est pas nécessaire.

Par principe, ne pas réutiliser les joints, les joints toriques et les vis.

Lors du réemploi des pièces déjà utilisées, prendre en considération les plages de tolérance et les critères suivants :

Zylinderlaufbuchsen

Das Honbild (Rautenmuster) muss noch deutlich sichtbar sein. Leichter Verschleiß in Form von gerade sichtbaren Spuren im Bereich des Kolbenweges ist noch zulässig.

Welle

Die Oberfläche der Lagerstellen muss vollkommen blank sein. Auf der Welle festsitzende Aluminiumpartikel mit Polierleinwand Körnung P280 entfernen. Dabei darf keinesfalls ein Materialabtrag von der Welle erfolgen. Der Ölkanal muss sauber sein.

Ölpumpe

Die Oberfläche darf nicht durch Fremdkörper o.ä. beschädigt sein. Räder und Umschaltvorrichtung müssen leichtgängig sein.

Ventilplatten

Schadhafte Ventilplatten generell komplett austauschen. Die Arbeitsventile/Ventilsitze dürfen nicht eingeschlagen sein. Die Ventillamellen dürfen nicht verbogen sein und müssen an der Platte anliegen. Unter den Lamellen dürfen keine Fremdkörper oder Ölkohle sein.

Druckentlastungsventil

Druckentlastungsventile, die einmal angesprochen haben, müssen getauscht werden. Die Ventile müssen bis zu 26 bar Differenzdruck dicht sein.

Gasausgleichsventil

Prüfen, ob Metallplättchen leicht beweglich ist, andernfalls komplett austauschen.

Bohrungen für Lagerbuchsen

Die Bohrungen sind meist noch in Ordnung, wenn die Buchse noch fest im Gehäuse sitzt. Hat sich die Buchse mit der Welle verschweißt und dabei in der Bohrung mitgedreht, ist das Gehäuse oder der Lagerdeckel nicht mehr verwendbar.

Cylinder sleeves

The honing pattern (diamond barring) must still be clearly visible. Slight wear in the form of slightly visible tracks in area of the piston path is still tolerable.

Shaft

The surfaces of the bearing locations must be perfectly smooth. Remove any aluminum particles stuck to the shaft with a polishing linen, grain P280. While doing so, no material is allowed to rub off from the shaft. The oil channel must be clean.

Oil pump

The surface must not be damaged by foreign objects, or the like. Wheels and switching device must run easily.

Valve plates

In general, replace defective valve plates completely. The working valves/valve faces must not be sunk in. The valve reeds must not be bent and must lie on the plate. No foreign bodies or oil carbon may be under the reeds.

Pressure relief valve

Pressure relief valves must be replaced when they have been triggered once. The valves must resist up to 26 bar differential pressure.

Gas equalizing valve

Check if the metal platelets are easily movable, otherwise replace entirely.

Bores for bearing bushes

The bores are, for the most part, still OK when the bush still fits tight in the housing. If the bush has bonded with the shaft and rotates along inside the bore, the housing or the bearing cover is no longer usable.

Chemises de cylindre

L'empreinte du honing (figures en losange) doit être nettement visible. Une usure légère sous forme de traces à peine visibles sur le trajet du piston est encore admissible.

Arbre

La surface à l'emplacement des paliers doit être vraiment nette. Retirer les particules d'aluminium qui adhérent à l'arbre avec une toile de polissage ayant un grain P280. Cette opération ne doit, en aucun cas, engendrer une abrasion de matière sur l'arbre. Le canal d'huile doivent être propres.

Pompe à huile

La surface ne doit pas être endommagée par des corps étrangers ou quelque chose de similaire. Le mouvement des pignons et du dispositif d'inversion doit être facile.

Plaques à clapets

Remplacer systématiquement les plaques à clapets endommagées complètes. Les soupapes de travail / les sièges de soupapes ne doivent pas être marqués par des chocs. Les lames de soupapes ne doivent pas être déformées et bien porter sur la plaque. Il ne doit pas y avoir de corps étrangers ou de la calamine sous les lames.

Soupape de décharge

Les soupapes de décharge qui ont été une fois sollicitées doivent être remplacées. Les soupapes doivent rester étanches jusqu'à 26 bar de pression différentielle.

Soupape d'égalisation de pression des gaz

Vérifier si le mouvement des plaquettes métalliques est facile, sinon remplacer complètement.

Alésages pour coussinets

Les alésages sont généralement en bon état si le coussinet est encore fermement calé dans son logement. Si le coussinet s'est collé sur l'arbre et a tourné dans l'alésage, alors le carter ou le couvercle de palier n'est plus réutilisable.

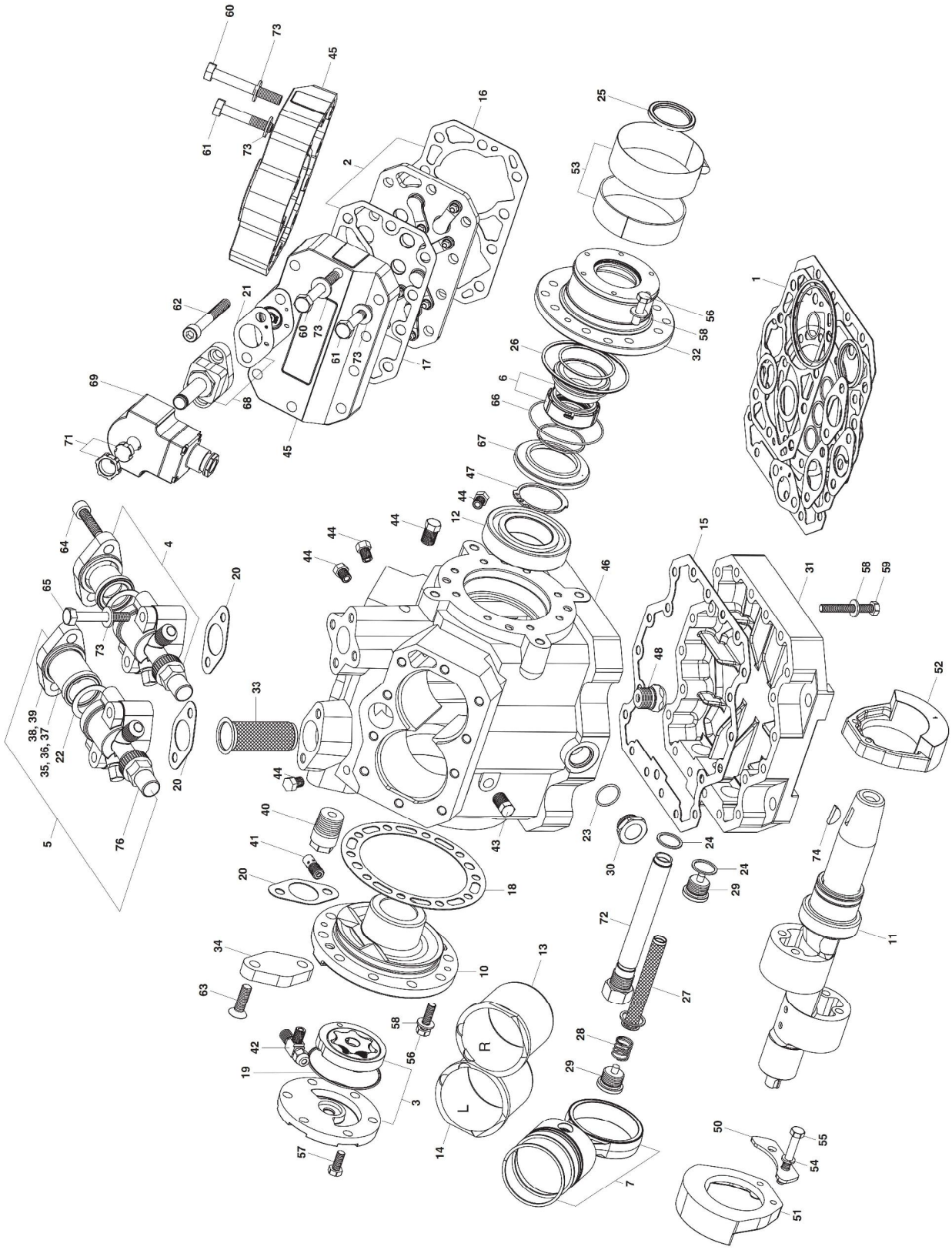

Abb. 5 Explosionsdarstellung 4UFC(Y) .. 4NFC(Y)

Fig. 5 Exploded view 4UFC(Y) .. 4NFC(Y)

Fig. 5 Vue éclatée 4UFC(Y) .. 4NFC(Y)

Lagerbuchsen

Verschleiß oder deutliche Einlaufspuren dürfen nicht vorhanden sein.

Bearing bushes

There must be no wear or visible scratch marks.

Coussinets

Il ne doit pas y avoir d'usure ou de traces distinctes de grippage.

Pleuel und Kolben

Die Pleuellager und die Oberfläche der Kolben sollen keinen Verschleiß aufweisen. Wir empfehlen diese Teile grundsätzlich durch Neuteile zu ersetzen.

Connecting rod and pistons

The connecting rod bearings and the surface of the pistons should show no sign of wear. We recommend replacing these parts principally by new parts.

Bielles et pistons

Aucune usure ne doit être perceptible sur les coussinets de bielle et à la surface des pistons. Nous recommandons de remplacer systématiquement ces pièces par des nouvelles.

7.3 Verdichter zusammenbauen

Achtung!
Grundsätzlich vor dem Wiedereinbau alle Teile sorgfältig prüfen und reinigen (Dichtungsreste entfernen). Bewegte Teile und Gleitflächen mit sauberem Kältemaschinenöl einölen. Asbestfreie Dichtungen und die entsprechenden Dichtflächen nicht einölen!
Schraubenverbindungen mit dem vorgeschriebenen Drehmoment anziehen.

- Innenring des Zylinderrollenlagers (12) auf Heizplatte oder in Ofen vorsichtig erwärmen und bis Anschlag auf Welle schieben.
- Zylinderrollenlager (12) mit geeigneter Vorrichtung in das Gehäuse (46) drücken.
- Gasausgleichsventil (48) und Schauglas (30) einschrauben.
- Druckentlastungsventil (40) und Blindflansch (34) einschrauben.
- Zylinderlaufbuchse von oben in Zylinderbohrung einsetzen (bei Wiederverwendung an ehemaliger Position).
- Pleuel/Kolben (7) und Welle (11) einsetzen: Pleuel/Kolben von unten mit Hilfe eines Montagerings in die Zylinder schieben, Welle mit Montagehülse unter Drehen einschieben (nicht verkanten), Ausgleichsgewicht (51) anschrauben.
- Bodenplatte (31) anschrauben.
- Lagerdeckel montieren: siehe 6.4.
- Gleitring (6), O-Ring (66) und Dichtring (67) einsetzen.

7.3 Assembling compressor

Attention!
Basically check and clean all parts carefully before reassembling (remove gasket remains). Lubricate moved parts and sliding faces with clean refrigeration compressor oil. Do not lubricate the asbestos-free gaskets and their respective sealing surfaces!
Tighten the screwed connections with the specified torque.

- Carefully heat up the inner ring of the cylinder roller bearing (12) on a hotplate or in an oven and slide it onto the shaft up to the stop.
- Push the cylinder roller bearing (12) into the housing (46) using the appropriate device.
- Screw in the gas equalizing valve (48) and sight glass (30).
- Screw in the pressure relief valve (40) and the blind flange (34).
- Insert the cylinder sleeve from above into the cylinder bore (when using again in the former position).
- Insert connecting rod/piston (7) and shaft (11): Push the connecting rod/piston from underneath into the cylinder with the help of a mounting ring; push in the shaft with mounting sleeve while turning (avoid jamming), screw on balance weight (51).
- Screw on the bottom plate (31).
- Mount bearing cover: see 6.4.
- Insert sliding ring (6), O-ring (66) and gasket ring (67).

7.3 Réassembler le compresseur

Attention !
Contrôler et nettoyer soigneusement toutes les pièces avant leur réemploi (ôter les restes de joint). Huiler les pièces mobiles et les surfaces de glissement avec une huile pour machines frigorifiques propre. Ne pas huiler les joints sans amiante et les surfaces d'étanchéité correspondantes! Serrer les raccords vissés avec le couple de serrage indiqué.

- Réchauffer prudemment la bague interne du roulement à rouleaux cylindriques (12) sur une plaque chauffante ou dans un four et glisser jusqu'à l'épaulement.
- Pousser le roulement à rouleaux cylindriques (12) avec un dispositif adapté dans le carter (46).
- Monter la soupape d'égalisation de la pression des gaz (48) et le voyant (30).
- Monter la soupape de décharge (40) et la bride pleine (34).
- Introduire par le haut la chemise de cylindre dans l'alésage du cylindre (en cas de réemploi, à sa position initiale).
- Introduire l'ensemble bielle / piston (7) et l'arbre (11): à l'aide d'une bague de montage, glisser par le bas l'ensemble bielle / piston dans le cylindre; avec une douille de montage, introduire l'arbre avec un mouvement de rotation (ne pas coincer); visser le contrepoids d'équilibrage (51).
- Visser la plaque de fond (31).
- Monter le couvercle de palier: voir 6.4.
- Mettre en place la bague de glissement (6), le joint torique (66) et la bague d'étanchéité (67).

- Seegerring (47) mit Montageglocke auf Welle schieben und mit Seegerringzange zusammendrücken.
- Einbau der Wellenabdichtung: siehe 6.3
- Ölpumpe montieren: siehe 6.4
- Ventilplatten / Zylinderköpfe montieren: siehe 6.6,
  ggf. Leistungsregler montieren: siehe 6.7.
- Saugfilter (33) einsetzen, Absperrventile SL (4), DL (5) einschließlich der Zwischenflansche anschrauben.
- Alle Magnetstopfen (29), Ölfilter (27) und ggf. Ölheizung einsetzen, Öl einfüllen.
- Kupplung montieren: siehe 6.2.
- Alle Schrauben mit dem vorgeschriebenen Drehmoment nachziehen.
- Leichtlauf der Welle durch Drehen mit Wellenschlüssel prüfen.
- Verdichter evakuieren.
- Verdichter in die Fahrzeuganlage einbauen, Probelauf.

- Slide the Seeger ring (47) onto the shaft by using the mounting bell and pinch with the circlip pliers.
- Install the shaft seal: see 6.3
- Mount oil pump: see 6.4
- Mount valve plates / cylinder heads: see 6.6,
  mount capacity regulator, if necessary: see 6.7.
- Insert suction filter (33), screw on shut-off valve SL (4), DL (5) along with the intermediate flanges.
- Insert all magnetic plugs (29), oil filters (27) and, if necessary, oil heater; fill with oil.
- Mount clutch: see 6.2.
- Tighten all screws with the specified torque.
- Check the easy running of the shaft by turning it with the shaft wrench.
- Evacuate compressor.
- Install the compressor into the vehicle unit, test run.

- Glisser le circlip (47) avec la bague de montage sur l'arbre et l'écraser avec la pince à circlip.
- Mise en place de la garniture d'étanchéité: voir 6.3.
- Monter la pompe à huile: voir 6.4.
- Monter les plaques à clapets / têtes de culasse: voir 6.6;
  le cas échéant, monter le régulateur de puissance: voir 6.7.
- Mettre en place le filtre d'aspiration (3), refixer les vannes d'arrêt asp. (4), ref. (5) avec les brides intermédiaires.
- Mettre en place tous les bouchons magnétiques (29), le filtre à huile (27) et le cas échéant, le chauffage carter; faire le remplissage d'huile.
- Monter l'embrayage: voir 6.2.
- Resserrer toutes les vis avec le couple de serrage indiqué.
- Faire tourner l'arbre avec une clé appropriée pour vérifier que la rotation est facile.
- Mettre le compresseur sous vide.
- Réinstaller le compresseur dans le système et effectuer les essais de fonctionnement.

8 Fehlerdiagnose

Die Einhaltung der in den Handbüchern angegebenen Empfehlungen gewährt einen zuverlässigen Betrieb und eine lange Lebensdauer des Verdichters.

Sollte es dennoch zu Betriebsstörungen und Schäden am Verdichter kommen, so lässt sich als Ursache meist eine wiederholte oder dauerhafte Überschreitung der zulässigen Einsatzbedingungen und/oder Schmierungsmangel feststellen. Es genügt daher nicht, das beschädigte Teil oder den Verdichter auszutauschen. Um schwere Folgeschäden oder den Totalausfall des Verdichters zu vermeiden, muss die eigentliche Ursache für die Störung gefunden und beseitigt werden.

Die häufigsten Funktionsstörungen bei Verdichtern sind:

- Sicherheitsabschaltung
- Leistungmangel
- Schmierungsmangel
- Bauteilschäden

Die nachfolgende Liste enthält die wichtigsten Ursachen für diese Störungen (Anordnung der Verdichterbauteile siehe Abb. 1).

8 Error diagnosis

Observing the recommendations given in the manuals ensures the dependable operation and a long service life of the compressor.

Should malfunctions and damages occur to the compressor despite this, it is usually due to the repeated or continually exceeding of the allowable operating conditions and/or a lack of lubrication. It is therefore not sufficient to change the damaged component or the compressor. To avoid further damages or repeated failure of the compressor, the actual cause for the malfunction must be found and eliminated.

The most frequently occurring compressor malfunctions are:

- Safety shutdown
- Lack of power
- Lack of lubrication
- Damaged to the components

The following list contains the most important causes for these faults (for the arrangement of the compressor components, see Fig. 1).

8 Diagnostic des défauts

Le respect des recommandations indiquées dans les manuels garantit un fonctionnement fiable et une longue durée de vie du compresseur.

La cause des incidents de fonctionnement et des dégâts sur le compresseur qui peuvent malgré tout se produire, est généralement un dépassement répétitif ou permanent des conditions d'application autorisées et / ou un manque de lubrification. Il ne s'agit donc pas de se contenter de remplacer la pièce défectueuse ou le compresseur. Afin d'éviter de gros défauts qui en seraient la conséquence, ou une nouvelle défaillance du compresseur, il faut rechercher la véritable cause du défaut et y remédier.

Les incidents de fonctionnement du compresseur les plus fréquents sont:

- Coupure par sécurité
- Manque de puissance
- Manque de lubrification
- Dégâts sur les composants

La liste suivante résume les principales causes de ces incidents (position des composants du compresseur, voir fig. 1).

Mögliche Ursachen	Maßnahmen, Hinweise
Sicherheitsabschaltung (Abschaltung des Verdichters durch Hoch-/Niederdruck-Wächter oder Druckgas-Temperaturfühler)	
zu niedriger Saugdruck	
• Fehlfunktion des TX-Ventils	• Funktion und Überhitzungseinstellung prüfen
• zu wenig Kältemittel	• Systemdichtheit prüfen, auf Mindeststand auffüllen
• Verdampferleistung ungenügend	• reinigen, bei Vereisung Ursache beheben, Lüfter prüfen
• Verdampfer mit Öl überfüllt / verölt	• Ölfüllmenge reduzieren
• Saugfilter verstopft oder Drosselstelle in Saugabsperrventil, Flüssigkeits- oder Saugleitung	• Ursache beseitigen, ggf. Filterwechsel
zu hoher Saug- / Verflüssigungsdruck	
• Verflüssigerleistung ungenügend	• reinigen, Lüfter prüfen
• zu viel Kältemittel	• auf Mindeststand reduzieren
• Fremdgas	• entlüften (siehe Betriebsanleitung)
• Druckabsperrventil gedrosselt	• vollständig öffnen
• Rückschlagventil in Druckgasleitung defekt oder zu geringe Leistung	• austauschen
zu hohe Druckgas- / Öltemperatur	(Druckgas: Druckrohr außen max. 120°C, Öl: Kurbelgehäuse außen max. 80°C (blanke Stelle))
• zu wenig Kältemittel	• Systemdichtheit prüfen, auf Mindeststand auffüllen
• Bypass zwischen Hoch- und Niederdruck	• Druckentlastungsventil prüfen/austauschen, Anlage prüfen
• Fremdgas	• entlüften (siehe Betriebsanleitung)
defekte / undichte Arbeitsventile	
• Ventil / Dichtungssteg gebrochen	• reparieren, Ursache beseitigen. Ventilbruch meist durch Flüssigkeitsschläge wegen zu viel Kältemittel, zu viel Öl oder fehlerhafter Regelung des TX-Ventils; bei Druckventilbruch Gefahr von Pleuellagerschäden
• Verschmutzung (Ölkohle, Fremdpartikel)	• reinigen / austauschen, Ursache beseitigen. Ölkohle meist durch zu hohe Betriebstemperatur oder Fremdgas
undichte Zylinderkopfdichtung	• austauschen (asbestfreie Dichtungen **nicht** einölen!)
Leistungsmangel (Verdichter liefert zu wenig Kälteleistung)	
zu niedriger Saugdruck	• siehe “Sicherheitsabschaltung”
zu geringer Druckaufbau	
• defekte / undichte Arbeitsventile	• siehe “Sicherheitsabschaltung”
• Kolbenringe / Laufbuchse verschlissen	• Kolben/Pleuel und Laufbuchse austauschen
• undichte Zylinderkopfdichtung	• austauschen (asbestfreie Dichtungen **nicht** einölen!)
• Bypass zwischen Hoch- und Niederdruck	• Druckentlastungsventil prüfen/austauschen, Anlage prüfen
• Leistungsregler blockiert	• reparieren / austauschen
abnormale Betriebsbedingungen	
• zu geringe / zu hohe Überhitzung	• siehe “Sicherheitsabschaltung”
• Einsatzgrenzen überschritten	• siehe “Sicherheitsabschaltung”
• Fremdgas	• entlüften (siehe Betriebsanleitung)
• zu wenig / zu viel Kältemittel	• auf Mindestmenge auffüllen / reduzieren
• zu viel Öl	• Ölmenge reduzieren

Mögliche Ursachen	Maßnahmen, Hinweise
Schmierungsmangel (Abschaltung durch Öldruck-Wächter (falls vorhanden) oder Schäden an Gleitflächen und Lagern)	
zu wenig Öl, Ölabwanderung	
• großes Anlagenvolumen	• nachfüllen, über längere Betriebszeit kontrollieren
• ungenügende Gasgeschwindigkeit (Steigleitungen)	• über längere Betriebszeit bei Minimaldrehzahl kontrollieren ggf. Änderung der Rohrführung
zu niedrige Ölviskosität durch Kältemittelanreicherung	
• Verdichter im Stillstand kälter als Verdampfer	• ggf. Magnetventil in Flüssigkeitsleitung und Rückschlagventil in Druckleitung erforderlich
• zu viel Kältemittel	• auf Mindeststand reduzieren
• undichtes Magnetventil in Flüssigkeitsleitung	• reparieren / austauschen
• ungenügende Flüssigkeitsabscheidung beim Start	• Saugleitung mit „Schwanenhals", ggf. Flüssigkeitsabscheider
• zu geringe Sauggasüberhitzung oder starkes Pendeln im Betrieb	• Überhitzungseinstellung mind. 6 .. 7 K, ggf. Position oder Befestigung des Fühlers korrigieren
zu hohe Öltemperatur	
• undichte / defekte Arbeitsventile	• siehe "Sicherheitsabschaltung"
• verschlissene Kolbenringe	• austauschen, Kolben und Zylinder prüfen
Öl nicht mehr schmierfähig	
• verschmutzt durch Abrieb oder Fremdstoffe	• Magnetstopfen, Ölsieb und Bodenplatte kontrollieren, Ölwechsel (evtl. mehrfach), Ursache beseitigen
• chemisch zersetzt, erhöhter Feuchtigkeitsgehalt	• Säure-/Feuchtigkeitsgehalt kontrollieren, auf Verkokungsrückstände (Ventilplatte) und Cu-Plattierung (Gleitflächen, Ventilplatte) prüfen, Öl- und Trockner wechseln (evtl. mehrfach), Ursachen beseitigen (Schlauchverbindungen mit erhöhter Durchlässigkeit erneuern)
Ölpumpe / Öldruckregulierventil defekt	• reparieren / austauschen
zu niedriger Ansaugdruck der Ölpumpe	
• Ölsieb verstopft	• reinigen, Öl wechseln, bei Verschleiß evtl. Verdichter austauschen
• Saugfilter verstopft	• reinigen, Ursache beseitigen
Bauteilschäden (Verdichter läuft trotz Anforderung und Antrieb nicht, nur schwergängig o. mit ungewöhnlichen Geräuschen)	
Bauteile im Verdichter defekt	
• Überlastung, Flüssigkeitsschläge	• reparieren / austauschen, Ursache beseitigen
• Schmierungsmangel	• reparieren / austauschen, Ursache beseitigen
• üblicher Verschleiß	• reparieren / austauschen
Magnetkupplung defekt	
• Magnet überlastet	• austauschen, Ursache (z.B. Spannungsabfall an korrodierten Anschlussklemmen) beseitigen
• Lager überlastet, zu hohe Riemenvorspannung, zu kurze Taktzyklen	• austauschen, Ursache beseitigen
Wellenabdichtung undicht	(Leckölmenge bis ca. 0,05 cm^3/h innerhalb Toleranz)
• Schmierungsmangel	• austauschen, Abhilfe siehe „Schmierungsmangel"
• Überhitzung (Verhärtungen, Risse, Ölkohle)	• austauschen, Ursache beseitigen
• starke Schwingungen (lockere Kupplung, nicht fluchtender Riemenantrieb, ungleichförmiger Antrieb)	• austauschen, Ursache beseitigen
• zu starke Riemenvorspannung	• Riemenspannung einstellen

Possible reasons	Measures, recommendations
Safety cut-out (Compressor cuts out due to LP/HP pressure switch or discharge gas sensor)	
suction pressure too low	
• faulty TX valve function	• check function and superheat setting
• insufficient refrigerant charge	• check system for leaks, charge to minimum level
• insufficient evaporator capacity	• clean, if iced-up cure the cause, check fan
• excessive oil in evaporator	• reduce oil charge
• Suction filter blocked or throttling in suction shut-off valve, liquid or suction line	• cure cause, possibly change filter
suction / condensing pressure too high	
• insufficient condenser capacity	• clean, check fan
• too much refrigerant	• reduce to minimum level
• foreign gas	• purge (see operating instruction)
• discharge shut-off valve throttled	• open fully
• check valve in discharge line defective or too small size	• exchange
discharge gas / oil temperature too high	(discharge gas: max. 120°C on outside of discharge line, oil: max. 80°C outside on crankcase (cleaned surface))
• insufficient refrigerant	• check system for leaks, charge to minimum level
• by-pass between high and low pressure	• check / exchange relief valve, check plant
• inert gas	• purge (see operating instruction)
defective / leaking working valves	
• valve / gasket bridge broken	• repair, cure cause. Valve damage mainly caused by liquid slugging due to excessive refrigerant, too much oil or faulty TX valve regulation; with discharge valve breakage danger of damage to connecting rod bearing)
• contamination (oil coke / foreign particles)	• clean / exchange, cure cause. Oil coke mainly due to excessive operating temperature or inert gas
leaking cylinder head gasket	• exchange (do **not** oil asbestos free gaskets!)
Insufficient capacity (Compressor provides too little refrigeration capacity)	
suction pressure too low	• see “safety cut-out”
insufficient pressure generation	
• defective / leaking working valves	• see “safety cut-out”
• worn piston rings / cylinder liners	• exchange of connecting rods/pistons and liners
• leaking cylinder head gasket	• exchange (do **not** oil asbestos free gaskets!)
• by-pass between high and low pressure	• check / exchange internal relief valve, check plant
• capacity control sticking	• repair / exchange
abnormal operating conditions	
• too low / too high superheat	• see “safety cut-out”
• application limits exceeded	• see “safety cut-out”
• inert gas	• purge (see operating instruction)
• too much / too little refrigerant	• charge / reduce to minimum level
• too much oil	• reduce quantity of oil

Possible reasons	Measures, recommendations
Insufficient lubrication (Cut-out due to oil pressure limiter (if fitted) or damage to sliding surfaces and bearings)	
insufficient oil, oil migration	
• large plant volume	• supplement oil charge, check over longer operating time
• insufficient gas velocity, rising pipelines	• check over longer operating time with minimum compressor speed, change pipe runs if necessary
oil viscosity too low due to high dilution with refrigerant	
• compressor during off cycle colder than evaporator	• solenoid valve in liquid line and check valve in discharge gas line may be necessary
• too much refrigerant	• reduce to minimum level
• leaking solenoid valve in liquid line	• repair / exchange
• insufficient liquid accumulation at start	• fit “swan neck” in suction line, if required fit liquid accumulator
• too little suction gas superheat or hunting during operation	• superheat minimum 6..7 K, correct bulb position or fixing if required
oil temperature too high	
• leaking / defective working valves	• see “safety cut-out”
• worn piston rings	• exchange, check pistons and cylinder liners
oil no longer capable of lubricating	
• contaminated by wear particles or foreign matter	• check magnetic plug, oil filter and base plate, change oil (repeatedly if required), cure cause
• chemically decomposed, increased moisture content	• check for acid / moisture content, check for coke deposits (valve plate) and Cu plating (sliding surfaces, valve plate). Change oil and drier (repeatedly if required), cure cause (renew hose connections which have increased porosity)
oil pump / oil regulation valve defective	• repair / exchange
suction pressure at oil pump inlet too low	
• oil filter blocked	• clean, oil change, with possible wear, exchange compressor
• suction filter blocked	• clean, cure cause
Component damage (Compressor does not run despite demand and drive, only heavily or with unusual noises)	
Components in compressor defective	
• overloading, liquid slugging	• repair / exchange, cure cause
• lack of lubrication	• repair / exchange, cure cause
• usual wear	• repair / exchange
Magnetic clutch defective	
• magnet overloaded	• exchange, cure cause (e.g. loss of voltage due to corroded connecting terminals)
• bearing overloaded, excessive belt tension, too short clcok cycles	• exchange, cure cause
	(oil leakage up to approx. 0,05 cm^3/h within tolerance)
Shaft seal leaking	• exchange, see “insufficient lubrication” for guide
• lack of lubrication	• exchange, cure cause
• overheating (hardening, cracks, oil coke)	• exchange, cure cause
• strong vibration (loose clutch, belt drive not aligned, irregular drive)	• adjust belt tension
• excessive belt tension	

Causes possibles	Mesures à prendre, recommandations
Coupure par sécurité (arrêt du compresseur par pressostat haute / basse pression ou par sonde de température des gaz au refoulement)	
Pression d'aspiration trop basse	
• Mauvais fonctionnement du détendeur thermostatique	• Contrôler le fonctionnement et le réglage de la surchauffe
• Trop peu de fluide frigorigène	• Contrôler l'étanchéité du système, refaire l'appoint jusqu'au niveau minimal
• Puissance de l'évaporateur insuffisante	• Nettoyer; si prise en glace, remédier à ce qui peut en être la cause; contrôler le ventilateur
• Evaporateur surchargé en huile / enduit d'huile	• Réduire la charge en huile
• Filtre d'aspiration obturé ou point d'étranglement, dans la vanne d'arrêt à l'aspiration, dans la conduite de liquide ou d'aspiration	• Remédier à ce qui peut en être la cause; le cas échéant, changer le filtre
Pression d'aspiration / de condensation trop élevée	
• Puissance du condenseur insuffisante	• Nettoyer, contrôler le ventilateur
• Trop de fluide frigorigène	• Réduire jusqu'au niveau minimal
• Gaz étranger	• Purger (voir instructions de service)
• Vanne d'arrêt au refoulement étranglée	• Ouvrir complètement
• Clapet de retenue dans la conduite de refoulement défectueux ou puissance trop faible	• Remplacer
Température d'huile / des gaz au refoulement trop élevée	(gaz au refoulement: conduite de refoulement max. 120° C à l'extérieur; huile: carter max. 80° C à l'extérieur (sur métal nu))
• Trop peu de fluide frigorigène	• Contrôler l'étanchéité du système, refaire l'appoint jusqu'au niveau minimal
• Bipasse entre haute et basse pression	• Contrôler / remplacer la soupape de décharge, contrôler le système
• Gaz étranger	• Purger (voir instructions de service)
Soupapes de travail défectueuses / pas étanches	
• Soupape / joint cassé	• Réparer, en éliminer la cause. Une soupape cassée est souvent le résultat de coups de liquide quand il y a trop de fluide frigorigène, trop d'huile ou que le détendeur thermostatique est mal réglé; avec une soupape de refoulement cassée, il y a risque de dégâts sur les coussinets de bielle.
• Encrassement (calamine; particules étrangères)	• Nettoyer / remplacer, en éliminer la cause (la calamine résulte souvent d'une température de fonctionnement trop élevée ou de gaz étrangers)
Joint de tête de culasse pas étanche	• Remplacer (**ne pas** huiler les joints sans amiante)
Manque de puissance (compresseur ne fournit pas assez de puissance frigorifique)	
Pression d'aspiration trop basse	• Voir "coupure par sécurité"
Elévation de pression insuffisante	
• Soupapes de travail défectueuses / pas étanches	• Voir "coupure par sécurité"
• Segments de piston / chemise usés	• Remplacer l'ensemble bielle / piston et la chemise
• Joint de tête de culasse pas étanche	• Remplacer (**ne pas** huiler les joints sans amiante)
• Bipasse entre haute et basse pression	• Contrôler / remplacer la soupape de décharge, contrôler le système
• Régulateur de puissance bloqué	• Réparer / remplacer
Conditions de fonctionnement anormales	
• Surchauffe trop faible / trop élevée	• Voir "coupure par sécurité"
• Dépassement des limites d'application	• Voir "coupure par sécurité"
• Gaz étranger	• Purger (voir instructions de service)
• Trop peu / trop de fluide frigorigène	• Refaire l'appoint / réduire jusqu'au niveau minimal
• Trop d'huile	• Réduire la quantité d'huile

Causes possibles	Mesures à prendre, recommandations
Manque de lubrification (coupure par pressostat d'huile (si existant) ou dégâts sur les surfaces de glissement et les paliers)	
Trop peu d'huile, migration d'huile	
• Système très volumineux	• Faire l'appoint, contrôle sur une longue période de fonctionnement
• Vitesse de gaz insuffisante (tuyauterie ascendante)	• Contrôler sur une longue période de fonctionnement en vitesse de rotation minimale; le cas échéant, modifier le tracé de la tuyauterie
Viscosité d'huile trop faible à cause d'un enrichissement en fluide frigorigène	
• Compresseur à l'arrêt plus froid que l'évaporateur	• Le cas échéant, une vanne magnétique et un clapet de retenue dans la conduite de refoulement sont nécessaires
• Trop de fluide frigorigène	• auf Mindeststand reduzieren
• Vanne magnétique dans la conduite liquide pas étanche	• reparieren / austauschen
• Séparation de liquide au démarrage insuffisante	• Conduite d'aspiration avec "col de cygne"; le cas échéant, séparateur de liquide
• Surchauffe des gaz à l'aspiration insuffisante ou pompage important en fonctionnement	• Réglage de la surchauffe au moins 6…7K; le cas échéant, corriger la position ou la fixation du bulbe
Température d'huile trop élevée	
• Soupapes de travail pas étanches / défectueuses	• Voir "coupure par sécurité"
• Segments de pistons usés	• Remplacer, contrôler piston et cylindre
L'huile ne lubrifie plus	
• Souillée par des résidus d'abrasion ou des polluants externes	• Contrôler les bouchons magnétiques, le filtre à huile et la plaque de fond, faire une vidange d'huile (éventuellement répéter plusieurs fois), en éliminer la cause
• Décomposée chimiquement, teneur en eau élevée	• Contrôler l'acidité et la teneur en eau, vérifier la présence de résidus de carbonisation (plaque à clapets) ou de cuivrage (surfaces de glissement, plaque à clapets), remplacer le deshydrateur et idanger l'huile (éventuellement répéter plusieurs fois), en éliminer les causes (renouveler les raccords flexibles ayant une perméabilité accrue)
Pompe à huile / vanne de régulation de la pression d'huile défectueuse	• Réparer/ remplacer
Pression d'aspiration de la pompe à huile insuffisante	
• Filtre à huile obturé	• Nettoyer, vidange d'huile; en cas d'usure, remplacer éventuellement le compresseur
• Filtre d'aspiration obturé	• Nettoyer, en éliminer les causes
Dégâts sur les composants (il y a une demande et l'entraînement se fait mais le compresseur ne tourne pas, avec difficulté seulement ou avec des bruits inhabituels)	
Composants défectueux dans le compresseur	
• Surcharge coups de liquide	• Réparer / remplacer, en éliminer la cause
• Manque de lubrification	• Réparer / remplacer, en éliminer la cause
• Usure habituelle	• Réparer / remplacer
Embrayage électromagnétique défectueux	
• Aimant surchargé	• Remplacer, en éliminer la cause (par ex. chute de tension aux bornes de raccordement corrodées)
• Palier surchargé, tension initiale des courroies trop forte, cycles d'impulsions trop courts	• Remplacer, en éliminer la cause
Garniture d'étanchéité pas étanche	(Un débit de fuite d'huile jusqu'à environ 0,05cm3/h est dans les limites tolérées)
• Manque de lubrification	• Remplacer, remède voir "manque de lubrification"
• Surchauffe (durcissement, fissures, calamine)	• Remplacer, en éliminer la cause
• Fortes vibrations (embrayage relâché, défaut d'alignement de l'entraînement par courroies, entraînement irrégulier)	• Remplacer, en éliminer la cause
• Tension initiale des courroies trop forte	• Réajuster la tension des courroies

Bitzer Kühlmaschinenbau GmbH
Eschenbrünnlestr. 15
71065 Sindelfingen (Germany)
Tel. +49 (0) 7031-932-0
Fax +49 (0) 7031-932-146 & -147
http://www.bitzer.de • bitzer@bitzer.de

Änderungen vorbehalten / Subject to change / Toutes modifications réservées 08.04

DYNAGEN®

control solutions you can trust

TE410 User Manual



TOUGHSeries
Digital Generator Controllers

c UL us

Manual Revision: 5.0.0
Min. FW Revision: 1.90
Date Released: 14/03/2017
© 2017 DynaGen Technologies Inc

Table of Contents

1 Introduction 5

1.1 Specifications 5

2 Installation 7

2.1 General Wiring Notes 8

2.2 Terminal Descriptions 8

2.3 Wiring Harnesses 11

2.4 Typical Wiring Diagram 12

2.5 Typical Wiring Diagram with RelayPak 13

2.6 Wiring Considerations 14

2.6.1 Remote Start Contact (Start/Stop) 14

2.6.2 Emergency Stop Wiring 14

2.6.3 Universal Sensor 15

2.6.4 CAN Bus Wiring 16

2.6.5 Modbus Wiring 18

2.6.6 Current Transformers 19

2.6.7 RelayPak (Optional) 21

2.6.8 Speed Inputs 22

3 Pumping Applications 23

3.1 Manual Speed Control 23

3.2 Automatic Speed Control 24

3.2.1 Autostarting on Floats 24

3.2.2 Ramp up and Intermediate Speed 25

3.2.3 Process Control using Engine Speed 26

3.3 Speed Limiting 26

3.4 Electronic Engines 26

4 Using the Controller 28

4.1 Modes, Starting and Stopping 29

4.2 Speed Control Page / Tank Display 30

4.3 Four Parameter Display Pages 30

4.4 DM1 Page 31

4.5 Using Cooldown Mode 31

4.6 Warnings 32

4.7 Failures 32

4.8 Event Log 33

© 2017 DynaGen Technologies Inc

5 Settings 34

5.1 Application Menu ... **34**
5.1.1 Function Menu ... 34
5.1.2 Throttling Menu ... 34
5.1.3 Transducer Menu ... 35
5.1.4 Closed Loop Menu ... 36
5.1.5 Set Scheduler Menu ... 36
5.1.6 Long Time Run Menu ... 37
5.2 Operator Setup ... **37**
5.3 Switched Inputs ... **38**
5.3.1 Configurable Inputs ... 40
5.4 Switched Outputs ... **40**
5.4.1 Group Outputs ... 43
5.4.2 Pull and Hold Coil ... 43
5.5 Sensors ... **44**
5.5.1 Engine Temperature ... 44
5.5.2 Oil Pressure ... 45
5.5.3 Fuel Level ... 46
5.5.4 Engine Speed ... 46
Front Panel Speed Control ... 48
5.5.5 Battery Level ... 49
5.5.6 Auxiliary Sensors ... 51
Fault Monitor Example ... 55
Start on Low Example ... 56
Output on High Example ... 57
Sensor as a Switch ... 58
5.5.7 Custom Sensor Tables ... 58
5.6 Timers ... **59**
5.6.1 Engine Logic ... 59
Preheat Mode ... 60
False Restart ... 60
OFF Button Function ... 61
Idle ... 62
Warmup Idle ... 62
Idle Inhibit ... 63
5.6.2 Schedulers ... 63
Exerciser ... 63
Weekly Scheduler ... 65
Long Time Run ... 65
5.6.3 Maintenance ... 65
5.7 AC Monitor ... **66**
5.7.1 Generator Voltage ... 66
AC Voltage Select ... 68
5.7.2 Generator Frequency ... 68
RPM / Frequency Select ... 69
5.7.3 Generator Current ... 70
Basic Alarms ... 71
IDMT ... 71
Load Imbalance ... 72
Dummy Load ... 73

© 2017 DynaGen Technologies Inc

EPS Supplying Load 73
5.8 Communications 73
5.8.1 CAN Bus (J1939) 73
5.8.2 MOD Bus (RS485) 74
5.9 Other Config 74
5.9.1 Password 74
5.9.2 Settings Name 75
5.9.3 Process Control 75
5.9.4 Pump System 76
6 Troubleshooting 78

© 2017 DynaGen Technologies Inc

User Guide

© 2017 DynaGen Technologies Inc

1 Introduction

The TOUGH series controllers are designed to provide complete control, protection, AC metering, and engine instrumentation for both standard and electronic engines. The module is easily configured using either the front panel buttons or our DYNAGEN Configurator software. TOUGH series controllers are ideally suited for severe duty applications where reliability is critical such as mobile and stationary generators.



Tier 4 Ready



Features and Functions:

- 5 Year Warranty
- SAE J1939 CAN Bus Protocol
- RPM via J1939, Magnetic Pickup, or Generator
- Speed control offset for electronic engines
- Autostart on low battery and other sensors
- Trim feature for AC monitoring and sensors
- Maintenance counter
- Exerciser Clock
- 150 Event Log
- Conformally coated for protection against moisture
- Gasket for water ingress protection resistance
- Free RapidCore Configuration Software
- Fast and rugged installation clips
- Passcode protected
- Automatic shutdowns and warnings
- Manual and Remote start
- Momentary Start / Stop inputs
- Pre-heat and many other configurable timers
- Accepts common senders (VDO, Datcon, S&W)
- Custom senders configurable with DYNAGEN Configurator

Displays:

- Engine Temperature
- Oil Pressure
- Fuel Level
- Engine Speed
- AC Metering
- Battery Voltage
- Real Time Clock
- Engine Hours
- Time to Maintenance
- J1939 DTCs + Custom Text
- Custom Senders
- Warnings and Failures

1.1 Specifications

The TOUGH Series controllers were rigorously tested to ensure durability, reliability and functionality. The following specifications are a brief summary of the standards to which the controller has been tested. For complete details on the testing performed please contact DYNAGEN.

Testing Specifications

Specification	Rating
Electrical Transients	SAE1113-11
Thermal Shock and Cycling	SAE1455
Vibration Profiles	SAE1455
Electric Static Discharge	SAE1113-13
UL	c UL us UL 6200 recognized component. Consult factory for UL conditions of acceptability.

Physical Specifications

Specification	Rating
Operating Temperature	-40 to +158°F (-40 to +70°C)
LCD Viewing Temperature	-4 to +158°F (-20 to +70°C) (Optional heater available, call factory)

© 2017 DynaGen Technologies Inc

Specification	Rating
Weight Weight w/ RelayPak	0.83lb (0.38kg) 1.32lb (0.60kg)
Dimensions - controller (no gasket) - controller w/ gasket - controller w/ gasket and RelayPak	4.17" x 6.50" x 1.38" (10.59cm x 16.51cm x 3.51cm) 4.41" x 6.79" x 1.38" (11.20cm x 17.25cm x 3.51cm) 4.41" x 6.79" x 3.33" (11.20cm x 17.25cm x 8.46cm)

Electrical Specifications

Specification	Rating
Operating Voltage	5.5 ~ 36 VDC
Standby Current	60mA @ 12V 38mA @ 24V
Switched Inputs	+Battery, Ground, Open, Closed
Switched Outputs	+Battery @ 1A Max
Low Resistance Sensors	0 ~ 750Ohm
High Resistance Sensors	0 ~ 7,500Ohm
Universal Sensors	0 ~ 750Ohm, 0 ~ 7,500Ohm, 0 ~ 5 VDC, 4 ~ 20mA
Magnetic Pickup	10 ~ 10,000Hz at 1 ~ 50 VAC
AC Voltage (Line-To-Line)	50 ~ 600 VAC True RMS, Accuracy: 2% Full Scale. Do not connect more than 600VAC to the controller. Damage may result.
AC Current	0 ~ 5A (Current Transformer), Accuracy: 1% Full Scale
Communications	SAE J1939 (Tier II, III, IV)

© 2017 DynaGen Technologies Inc

2 Installation

Generator systems contain high voltage circuitry and precautions to protect against electrical shock should be taken. Failing to power down and lock out equipment can cause damage, injury or death.

WARNING: Wiring of this controller should be performed by qualified electricians only.

The following general electrical safety precaution should be followed:

- Do a thorough inspection of the area before performing any maintenance.
- Keep fluids away from electrical equipment.
- Unplug connectors by pulling on the plug and not the cord.
- Use fuses where appropriate.
- Ensure all equipment is properly grounded.
- Provide support to wires to prevent stress on terminals.

To ensure proper and safe operation, caution must be taken at the installation site to make sure it is free from excessive moisture, fluctuating temperature, dust and corrosive materials. Choose a mounting surface with the least amount of vibration and not more than **0.125" (3.175mm)** thick.

1) Choose a suitable mounting location based on the criteria above.
2) Create a rectangular cutout in the panel that is minimum 3.9" (99mm) high and 6.2" (158mm) wide.
3) Place the controller into the panel cutout so that the LCD screen and buttons are facing out.
4) Place the mounting clips into the designated slots on the top and bottom of the controller.
5) Tighten the screws on the clips until the controller is snug against the panel. Do not over tighten, the bottom of the screws should angle very slightly away from the controller.
6) If applicable, snap the RelayPak (RP100) to the back of the controller. Place one side of the RP100's tabs into the slot on the back of the controller and, without pushing on the relays, snap the other tab into place.

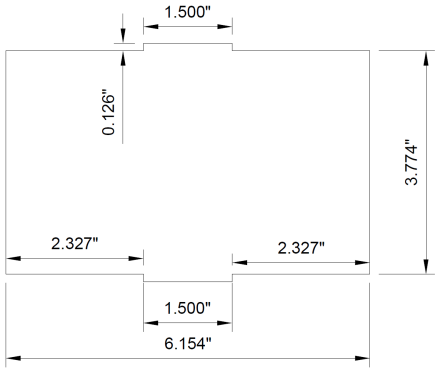

TE Series Cutout (Not To Scale)

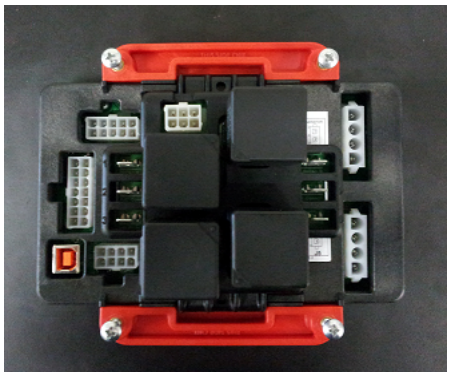

 © 2017 DynaGen Technologies Inc

2.1 General Wiring Notes

The following important wiring guidelines should be followed:

1. Use a minimum of 18AWG wire for all connections.

2. Battery + and Battery - connections on the controller should be run directly to the positive and negative terminals on the battery to prevent voltage drops from negatively impacting the controller.

3. Limit the wire length to 20ft (6.1m) to any I/O on the controller (e.g. Switched Input, Switched Outputs, AC Sensing, and Analog Inputs).

The Tough Series contains a TVS to protect the I/O and internals from a transient on the main battery (the battery the controller is powered from). If you have I/O connected to other batteries or power supplies those I/O must contain their own voltage transient protection. Otherwise the I/O and/or controller can be damaged if the transient exceeds the maximum rated voltage of the I/O. A device that provides this kind of protection is know as a TVS or a varistor.

4. Fusing
   a. A fuse should be placed inline with the battery + wire going to the controller power. A 10A fuse is suggested.
   b. The AC Voltage A, B, and C lines should be fused near the source of AC voltage with a 1A fuse. This protects personnel if any of these lines become disconnected and short or touch items or personnel.
   c. If using the RelayPak the power going to the relay commons should be fused.

5. For noisy environments some guidelines are:
   a. Replace speed sensing wire with twisted pair from the sensor to the controller.
   b. Consider using isolated sensors (i.e. two terminal) and use twisted pair wiring to connect from engine to controller.

The following enclosure guidelines should be followed:

1. It is recommended to use vibration mounts.
2. For outdoor applications, it is recommended to use a sealed enclosure.

2.2 Terminal Descriptions

Main Connector (J4)

Terminal	Name	Description
J4-1	+Battery	Provides power to the controller from the battery
J4-2	+Battery	Provides power to the controller from the battery
J4-3	Ground	Provides ground return for the controller
J4-4	Ground	Provides ground return for the controller
J4-5	Switched Input A	Configurable to detect +Battery, Ground, or Open
J4-6	Switched Input B	Configurable to detect +Battery, Ground, or Open
J4-7	Switched Input C	Configurable to detect +Battery, Ground, or Open
J4-8	Switched Output A	Outputs +Battery voltage when active (Max Current: 1A)
J4-9	Switched Output C	Outputs +Battery voltage when active (Max Current: 1A)
J4-10	Switched Output B	Outputs +Battery voltage when active (Max Current: 1A)
J4-11	Sensor Ground	Provides ground return for 2-wire (isolated) sensors
J4-12	Sensor Input A	High impedance sensor input (0 - 7,500Ohm)
J4-13	Sensor Input B	Low impedance sensor input (0 - 750Ohm)
J4-14	Sensor Input C	Universal sensor input (0 - 750Ohm, 0 - 7,500Ohm, 0 - 5 VDC, 4 - 20mA). See Universal Sensor section for more information.

Expansion Connector (J3)

 © 2017 DynaGen Technologies Inc

Terminal	Name	Description
J3-1	Switched Input D	Configurable to detect +Battery, Ground, or Open
J3-2	Switched Input E	Configurable to detect +Battery, Ground, or Open
J3-3	Switched Output D	Outputs +Battery voltage when active (Max Current: 1A)
J3-4	Switched Output E	Outputs +Battery voltage when active (Max Current: 1A)
J3-5	Switched Output F	Outputs +Battery voltage when active (Max Current: 1A)
J3-6	Sensor 5V	Provides 5 VDC for electronics sensors.
J3-7	Sensor Ground	Provides ground return for 2-wire sensors
J3-8	Sensor Input D	Universal sensor input (0 - 750Ohm, 0 - 7,500Ohm, 0 - 5 VDC, 4 - 20mA) See Universal Sensor section for more information.

© 2017 DynaGen Technologies Inc

Communications Connector (J6)

Terminal	Name	Description
J6-1		Non-Inverting communications line for Modbus (RS485). This is also often known as A.
J6-2	RS485 - (Inverting)	Inverting communications line for Modbus (RS485). This is also often known as B.
J6-3	No Connection	No Connection
J6-4	CAN-H	Communications line for CAN Bus (J1939)
J6-5	CAN-L	
J6-6	CAN-Shield	Connect the shield of the twisted pair cable to this terminal
J6-7	Speed Sensing A	Connect to a magnetic pickup, tachometer, or a flywheel alternator. Not polarity sensitive and not required if using AC voltage terminals for speed sensing.
J6-8	Speed Sensing B	Connect to a magnetic pickup, tachometer, or a flywheel alternator. Not polarity sensitive and not required if using AC voltage terminals for speed sensing.
J6-9	No Connection	No Connection
J6-10	RS485-Common	Common line for Modbus (RS485)

Generator AC Voltage (J7)

Terminal	Name	Description
J7-1	Phase A	Connect to Phase A of the generator
J7-2	Phase B	Connect to Phase B of the generator
J7-3	Phase C	Connect to Phase C of the generator
J7-4	Neutral	Connect to neutral.

Generator AC Current (J5)

Terminal	Name	Description
J5-1	Phase A	Connect to current transformer for Phase A of the generator
J5-2	Phase B	Connect to current transformer for Phase B of the generator
J5-3	Phase C	Connect to current transformer for Phase C of the generator
J5-4	CT Common	Connect to the commons of the current transformers

 © 2017 DynaGen Technologies Inc

2.3 Wiring Harnesses

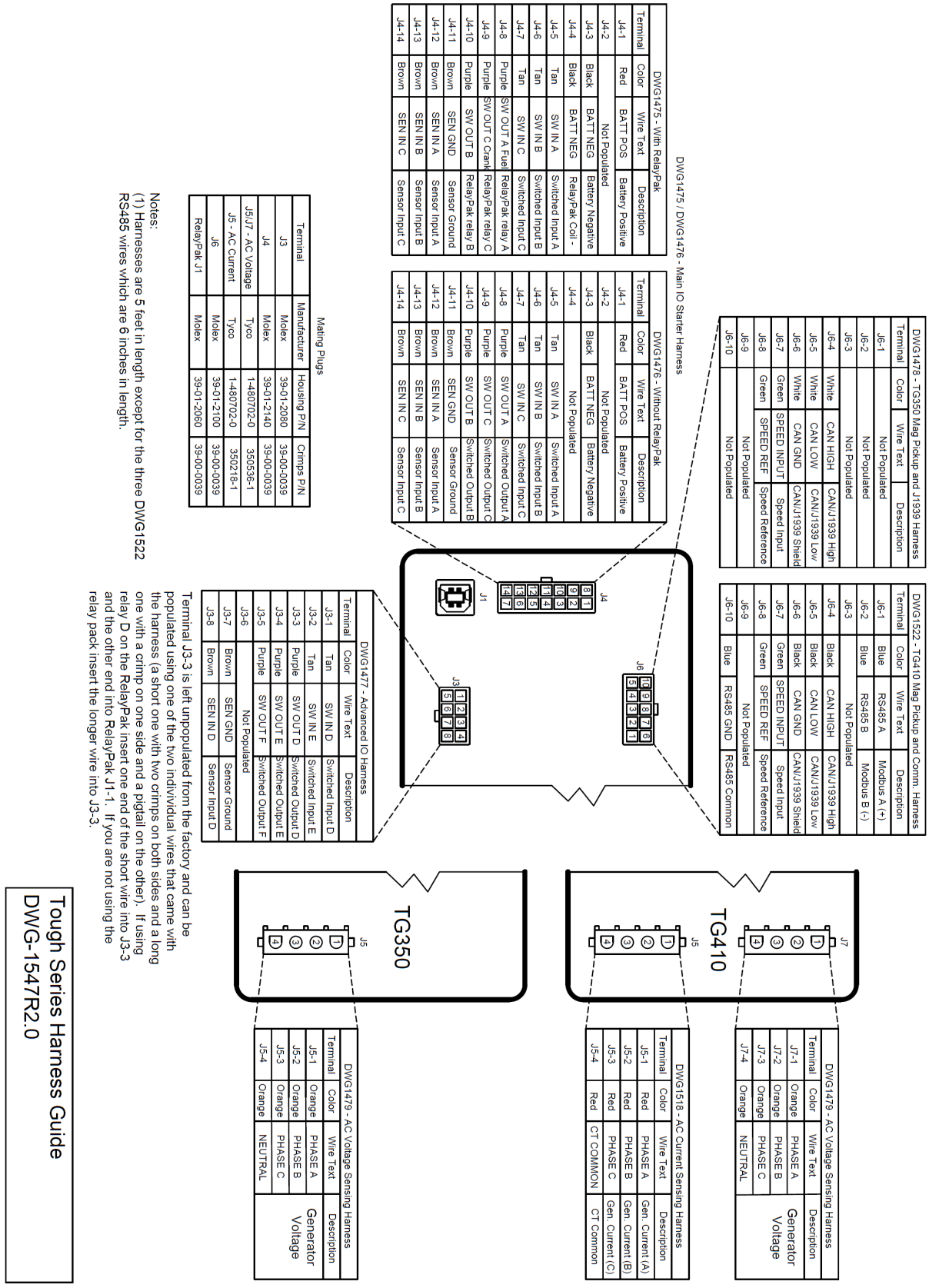

Mating Plugs

	Manufacturer	Housing P/N	Crimps P/N
J3	Molex	39-01-2080	39-00-0039
J4	Molex	39-01-2140	39-00-0039
J5/J7 - AC Voltage	Tyco	1-480702-0	350536-1
J5 - AC Current	Tyco	1-480702-0	350218-1
J6	Molex	39-01-2100	39-00-0039
RelayPak J1	Molex	39-01-2060	39-00-0039

Notes:
(1) Harnesses are 5 feet in length except for the three DWG1522 RS485 wires which are 6 inches in length.

Terminal J3-3 is left unpopulated from the factory and can be populated using one of the two individual wires that came with the harness (a short one with two crimps on both sides and a long one with a crimp on one side and a pigtail on the other). If using relay D on the RelayPak insert one end of the short wire into J3-3 and the other end into RelayPak J1-1. If you are not using the relay pack insert the longer wire into J3-3.

Tough Series Harness Guide
DWG-1547R2.0

 © 2017 DynaGen Technologies Inc

2.4 Typical Wiring Diagram

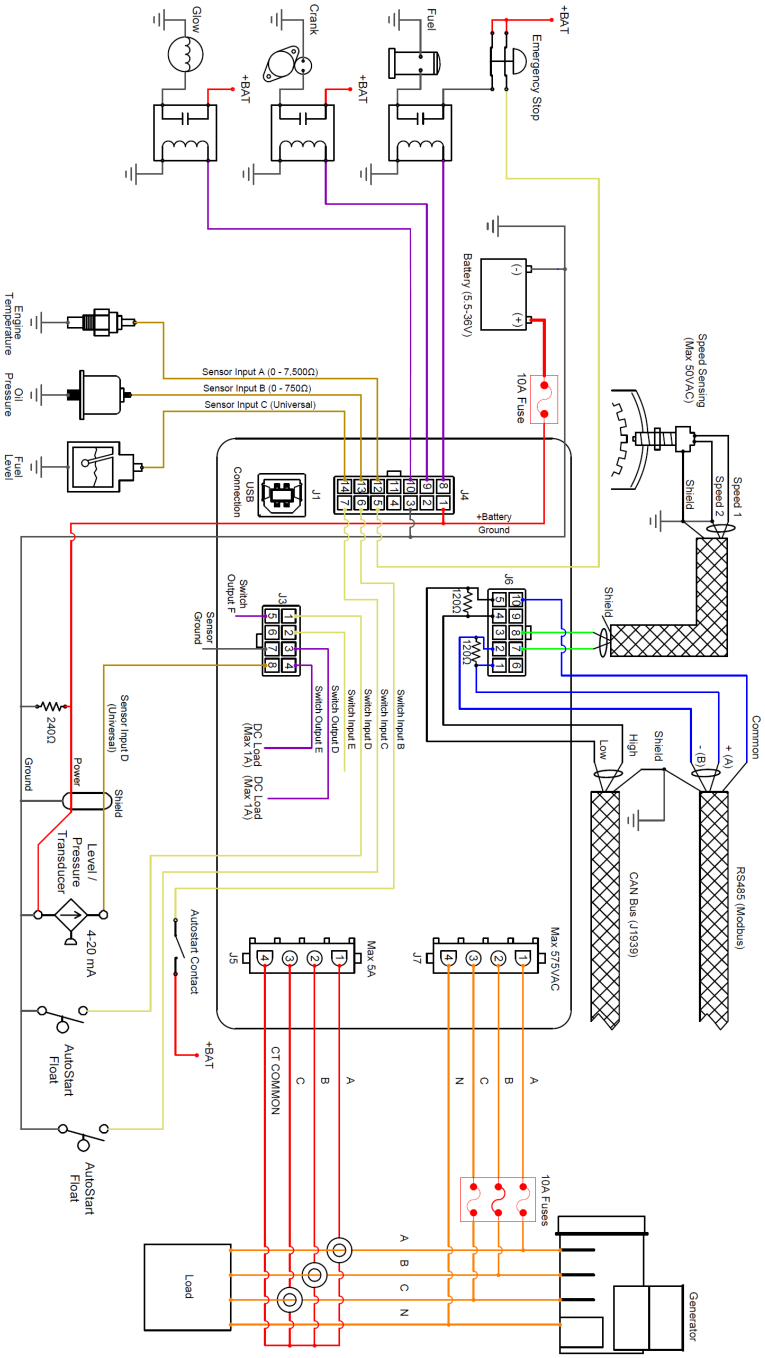

Speed Sensing Notes
(1) Input is to be used for a magnetic pickup (MPU) sensor, alternator, or tach output.
(2) Not required if using AC Voltage for speed sensing.
(3) The polarity of the inputs does not matter.
(4) Use twisted pair shielded cable. Leave one side of shield unterminated.
(5) If using a MPU:
(a) A shielded MPU is recommended.
(b) One side of the mag. pickup also has to be connected to ground in addition to the controller.

CAN (TE350/TE410) and RS485 (TE410) Connection Notes
(1) A 120 Ohm impedence twisted pair cable is required.
(a) Examples are Belden 9841 (single twisted pair) and Belden 7895A (two twisted pair).
(2) RS485 requires an extra wire or twisted pair in the cable for RS485 common.
(3) To prevent noise affecting controller operations bring the shielded cable within at least 6 inches of the terminal. Closer to 3 inches is better.
(4) Terminate the bus on each end with a 120Ohm resistor.
(5) Ground the shield on one end. Leave the other end unconnected.

AC Current (CTs) Notes
(1) If current readings are unstable attemp connecting the CT Common's to ground. Ensure the connecting wire is as short as possible.

Sensors
(1) If using non-isolated (one-wire) sensors connect sensor common to battery negative. Make connection at the same point the main ground connection is made.

Main Connector	
J4-1	+Battery
J4-2	+Battery
J4-3	Ground
J4-4	Ground
J4-5	Switch Input A
J4-6	Switch Input B
J4-7	Switch Input C
J4-8	Switch Output A
J4-9	Switch Output C
J4-10	Switch Output B
J4-11	Sensor Ground
J4-12	Sensor Input A
J4-13	Sensor Input B
J4-14	Sensor Input C

Expansion Connector	
J3-1	Switch Input D
J3-2	Switch Input E
J3-3	Switch Output D
J3-4	Switch Output E
J3-5	Switch Output F
J3-6	Sensor Power (5V)
J3-7	Sensor Ground
J3-8	Sensor Input D

Communication Connector	
J6-1	RS485-A
J6-2	RS485-B
J6-3	Reserved
J6-4	CAN High
J6-5	CAN Low
J6-6	CAN Ground
J6-7	Speed Input
J6-8	Speed Reference
J6-9	Reserved
J6-10	RS485 Ground

Generator Connector (A)	
J5-1	Gen. Current (A)
J5-2	Gen. Current (B)
J5-3	Gen. Current (C)
J5-4	CT Common

Generator Connector (V)	
J7-1	Gen. Phase A
J7-2	Gen. Phase B
J7-3	Gen. Phase C
J7-4	Neutral

TE410 Example
DWG-1555-2R1.0

© 2017 DynaGen Technologies Inc

2.5 Typical Wiring Diagram with RelayPak

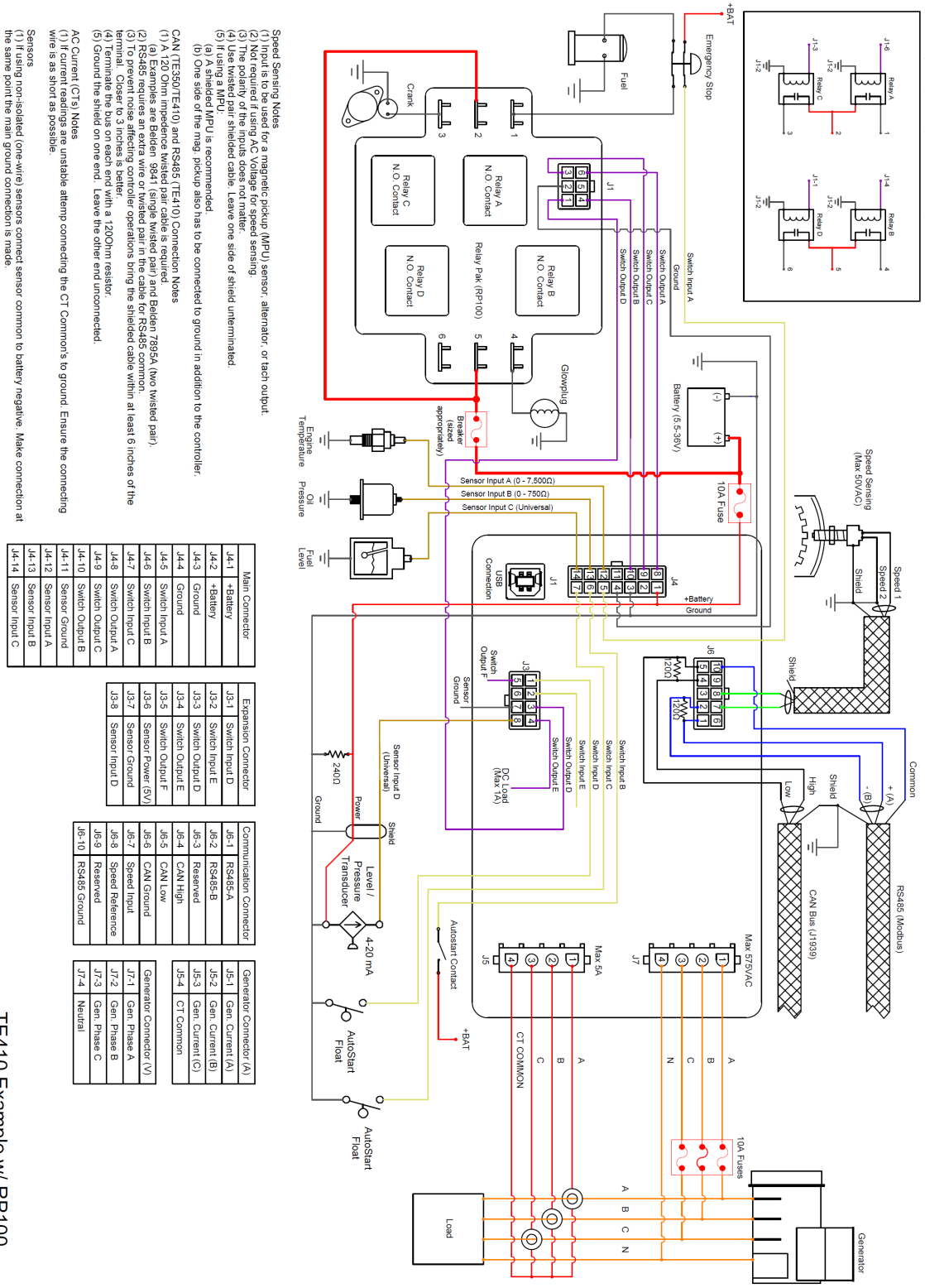

Speed Sensing Notes
(1) Input is to be used for a magnetic pickup (MPU) sensor, alternator, or tach output.
(2) Not required if using AC Voltage for speed sensing.
(3) The polarity of the inputs does not matter.
(4) Use twisted pair shielded cable. Leave one side of shield unterminated.
(5) If using a MPU:
(a) A shielded MPU is recommended.
(b) One side of the mag. pickup also has to be connected to ground in addition to the controller.

CAN (TE350/TE410) and RS485 (TE410) Connection Notes
(1) A 120 Ohm impedence twisted pair cable is required.
(a) Examples are Belden 9841 (single twisted pair) and Belden 7895A (two twisted pair).
(2) RS485 requires an extra wire or twisted pair in the cable for RS485 common.
(3) To prevent noise affecting controller operations bring the shielded cable within at least 6 inches of the terminal. Closer to 3 inches is better.
(4) Terminate the bus on each end with a 120Ohm resistor.
(5) Ground the shield on one end. Leave the other end unconnected.

AC Current (CT's) Notes
(1) If current readings are unstable attemp connecting the CT Common's to ground. Ensure the connecting wire is as short as possible.

Sensors
(1) If using non-isolated (one-wire) sensors connect sensor common to battery negative. Make connection at the same point the main ground connection is made.

Main Connector	
J4-1	+Battery
J4-2	+Battery
J4-3	Ground
J4-4	Ground
J4-5	Switch Input A
J4-6	Switch Input B
J4-7	Switch Input C
J4-8	Switch Output A
J4-9	Switch Output C
J4-10	Switch Output B
J4-11	Sensor Ground
J4-12	Sensor Input A
J4-13	Sensor Input B
J4-14	Sensor Input C

Expansion Connector	
J3-1	Switch Input D
J3-2	Switch Input E
J3-3	Switch Output D
J3-4	Switch Output E
J3-5	Switch Output F
J3-6	Sensor Power (5V)
J3-7	Sensor Ground
J3-8	Sensor Input D

Communication Connector	
J6-1	RS485-A
J6-2	RS485-B
J6-3	Reserved
J6-4	CAN High
J6-5	CAN Low
J6-6	CAN Ground
J6-7	Speed Input
J6-8	Speed Reference
J6-9	Reserved
J6-10	RS485 Ground

Generator Connector (A)	
J5-1	Gen. Current (A)
J5-2	Gen. Current (B)
J5-3	Gen. Current (C)
J5-4	CT Common

Generator Connector (V)	
J7-1	Gen. Phase A
J7-2	Gen. Phase B
J7-3	Gen. Phase C
J7-4	Neutral

TE410 Example w/ RP100
DWG-1555-4R1.0

© 2017 DynaGen Technologies Inc

2.6 Wiring Considerations

The following sections are meant to describe certain wiring configurations and are for illustrative purposes only. Not all applications are the same. Please ensure you modify these examples to fit your unique system requirements.

2.6.1 Remote Start Contact (Start/Stop)

As of Firmware version 1.60 the start/stop is factory defaulted to switch input B (changeable) and the trigger factory defaulted to Close +BAT. For older firmware versions you must set Start/Stop to Switched Input B or as desired and set the trigger mode to Close +BAT. The trigger can be set to any of four options but Close +BAT gives the best immunity to noise.

For runs over 20ft (6.1m) especially in noisy environments Dynagen recommends connecting the Start/Stop to an external relay. The relay needs to be located as close to the controller as possible.

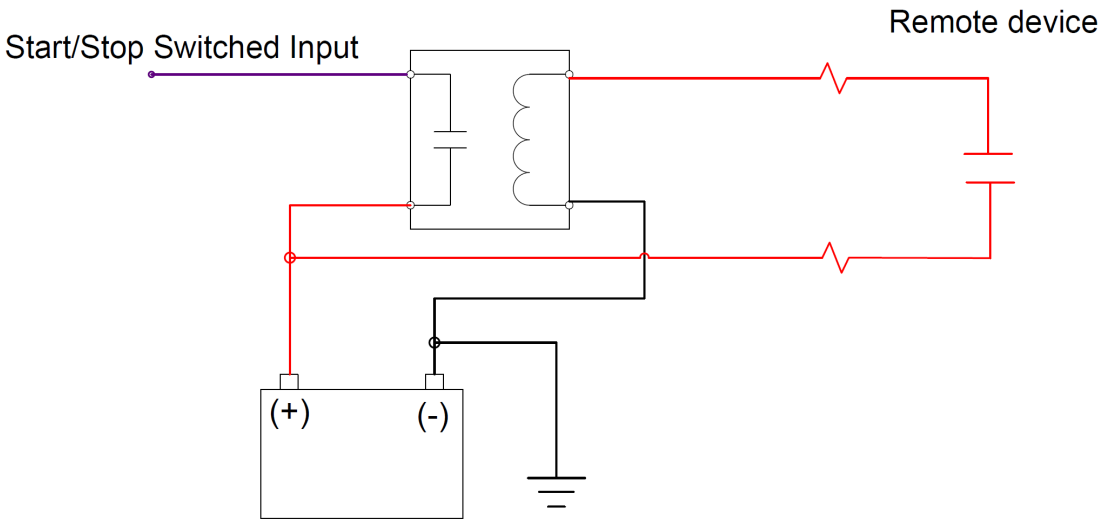

2.6.2 Emergency Stop Wiring

If Emergency Stop functionality is required, it is mandatory to install an external mushroom style switch wired in series with the fuel or ignition supply to ensure reliable and immediate shutdown upon activation.

Shown below is an example wiring diagram of a double pull, single throw switch being used to activate the e-stop input and cut power to the fuel solenoid. In this configuration, the e-stop is activated when there is an open circuit to the switched input and inactive when the input detects +Battery voltage.

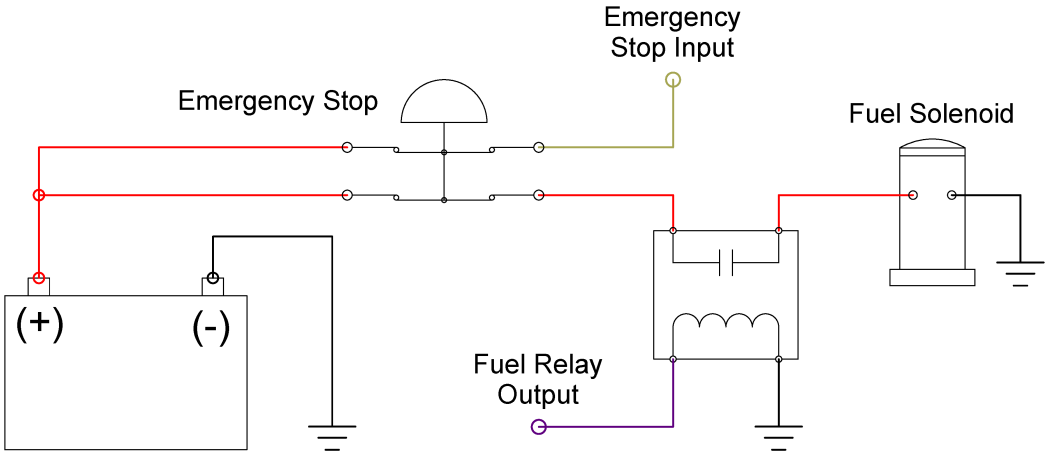

 © 2017 DynaGen Technologies Inc

2.6.3 Universal Sensor

Universal Sensors have the ability to be configured to detect different sender types (0 - 750Ohm, 0 - 7,500Ohm, 0 - 5 VDC, 4 - 20mA). The examples shown below are advanced applications of the universal sensor.

NOTE: Custom Sensor tables are required for the universal sender to work with these examples. See the Custom Sender Table section for more information.

Example #1: The following example shows the correct way for wiring a 4-20mA sensor. The 240Ohm resistor is required to transform the 4-20mA current into the 0-5V voltage range required by the controller.

4-20mA Wiring Example

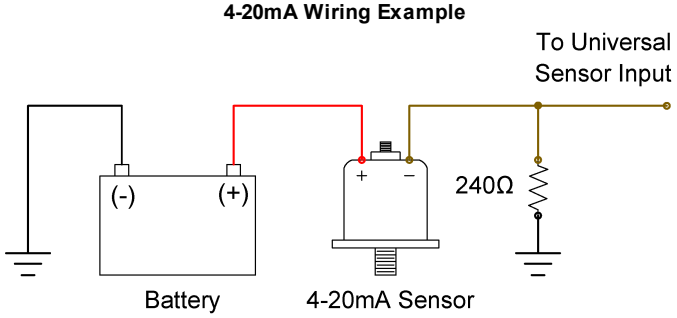

Example #2: Sometimes it is required to measure voltages outside the 0-5V range allowed by the controller. To do this you must use a voltage divider with appropriate scaling resistors. The equation to calculate the resistor values is as follows:

$$Vout = \left(\frac{R1}{R1 + R2}\right) \times Vin$$

Vout = 5V
Vin = Maximum Voltage to Read
R1 = Common Resistor Value > 10kOhm
R2 = Calculated Resistor Value (Select closest common resistor value)

The following diagram shows the typical wiring of a voltage divider. The resistors' values have been selected to allow the controller to read up to 36V from an external battery bank.

0-36V Wiring Example

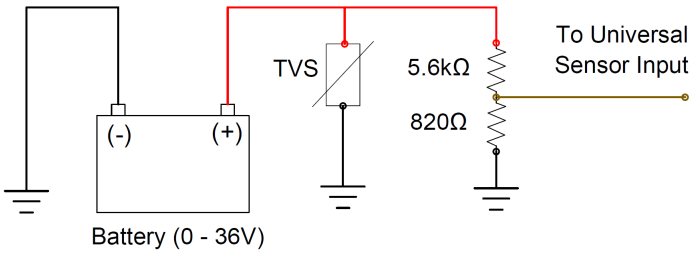

NOTE: A TVS (i.e. varistor) is required if the battery is different than the battery the controller is powered from. The controller's TVS cannot protect the sensor input from transients in this case.

 © 2017 DynaGen Technologies Inc

2.6.4 CAN Bus Wiring (J1939)

The following table outlines some items that must be taken into consideration when connecting to a CAN bus engine.

Consideration	Description
Bus Termination	Each end of the bus must be terminated from CAN H to CAN L with 120Ohm +/- 10 Ohm resistors. The resistor must be able to handle at least 400mW of power dissipation.
Cable Selection	A twisted pair 120Ohm impedance cable is required for communications. For better protection a shielded twisted pair cable is recommended. Examples are: 1. Belden 9841 - Shielded cable with one twisted pair, 24AWG 2. Belden 7895A - Shielded cable with two twisted pair, 20AWG For short runs of 5 feet or less regular 18AWG wiring can often be run.
Shielding	If using a shielded cable the shield must be connected to ground on one end of the bus only. This prevents loss of data from electromagnetic interference.
Termination at the Controller	The twisted pair cable must terminate no farther than 6 inches from the controller's CAN (J1939) connector. Three inches is ideal.

Communications Wiring

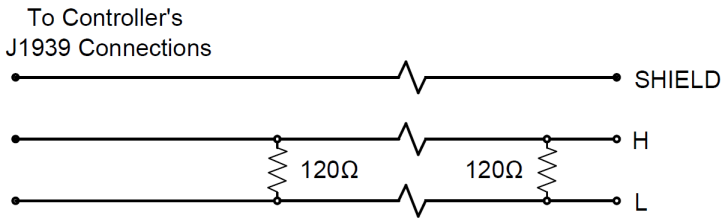

It is common practice to use the fuel output to trigger the ECM key input to enable the ECM before cranking. For some ECMs to function, they must be powered/enabled for a certain period before cranking to allow time for the ECM to boot up. There are two ways to provide this time:

- Set a preheat time or increase the preheat time to allow longer time for the ECM to boot up before cranking. The fuel output turns on at the start of preheat.
- Enable the Auto Power ECM setting in the Communications -> CAN Bus (J1939) menu will cause the fuel output to turn on in Auto mode and stay on.

ECM Wiring

 © 2017 DynaGen Technologies Inc

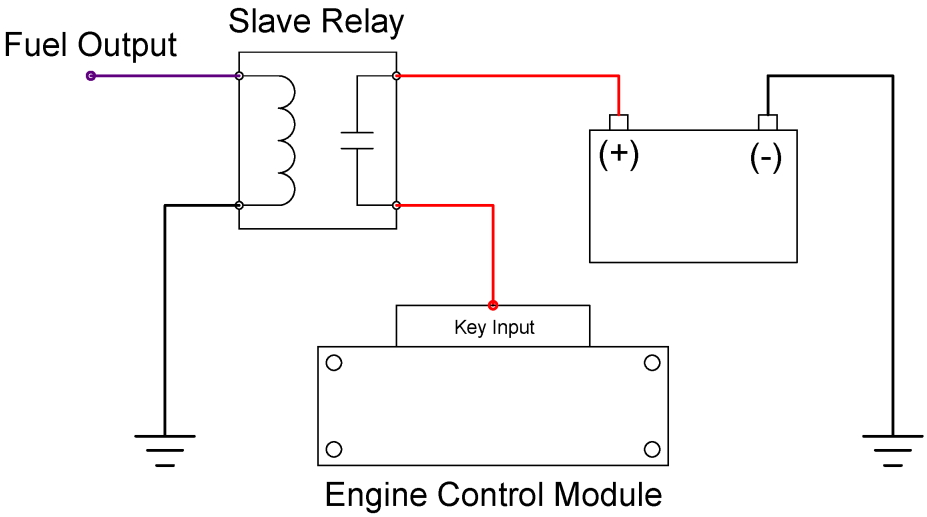

© 2017 DynaGen Technologies Inc

2.6.5 Modbus Wiring

The following table outlines some items that must be taken into consideration when connecting up a Modbus system.

Consideration	Description
Bus Termination	Each end of the bus must be terminated from A to B with 120Ohm +/- 10 Ohm resistors. The resistor must be able to handle at least 400mW of power dissipation.
Cable Selection	Shielded twisted pair 120Ohm impedance cable is required for communications. Shield drain wire is NOT be used for the RS485 common. The cable must have one twisted pair for A and B and a seperate wire or twisted pair for common. An example is Belden 7895A, a two twisted pair, 20AWG, where the second pair can be used for the RS485 common.
Distance (Power and Ground)	If running power and ground from the battery of your system to a remote device, use the following guidelines for the gauge of the power and ground wires. 1. Up to 450ft (137.2m) - 22AWG 2. Up to 700ft (213.4m) - 20AWG 3. Up to 1125ft (342.9m) - 18AWG 4. Up to 1800ft (548.6m) - 16AWG 5. Up to 2800ft (853.4m) - 14AWG
Termination at the Controller	The above cable must terminate no farther than 6 inches from the controller's RS485 (Modbus) connector. Three inches is ideal.

Refer to the Example wiring diagram for a wiring example.

 © 2017 DynaGen Technologies Inc

2.6.6 Current Transformers

When wiring current transformers into the system you must follow these considerations:

1. The maximum amperage allowed on the secondary is 5A. A 5:X ratio CT should be used where X is the maximum primary amperage rating (e.g. 200A).
2. The CT power rating should be a minimum of 1VA.

3. The current transformer of each phase must be facing the same direction. See below.
4. The CT Common connection must be connected to the black wire on each current transformer.
5. The wires from the current transformers to the controller should be as short as possible.
6. The CT wires should be run in a separate conduit from the AC voltage wires.

NOTE: If readings are unstable with the configuration shown below, attempt connecting the CT Common's black wire to the negative terminal of the battery. Ensure the connecting wire is as short as possible.

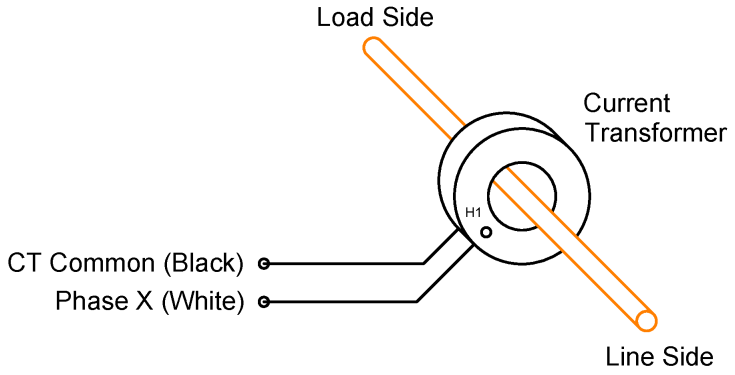

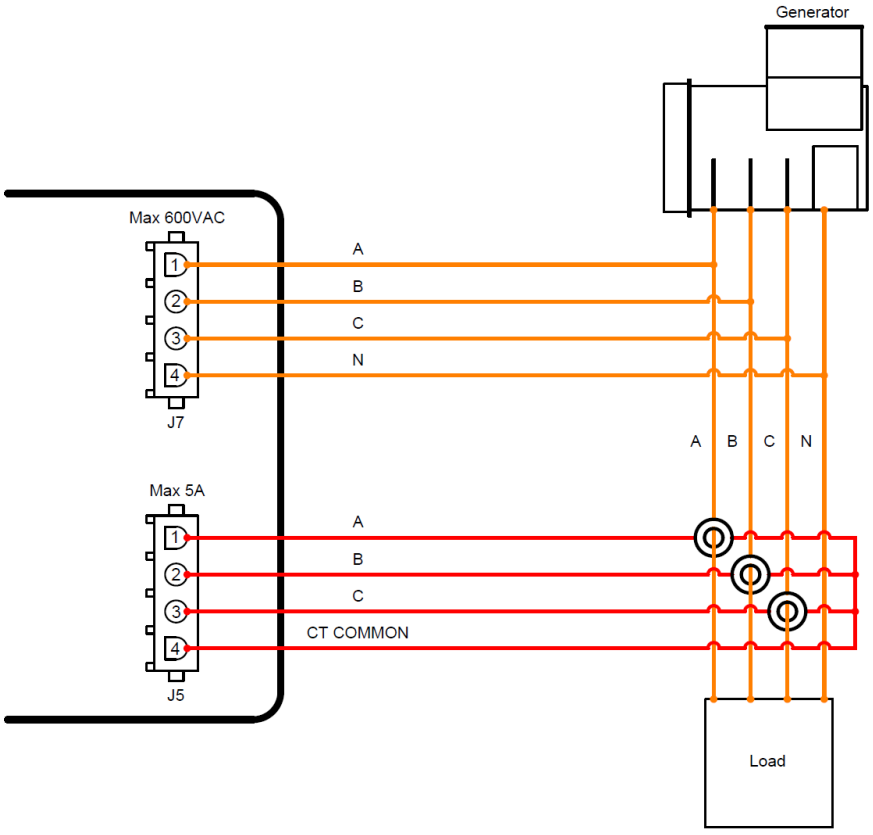

 © 2017 DynaGen Technologies Inc

 © 2017 DynaGen Technologies Inc

2.6.7 RelayPak (Optional)

The RelayPak is used to provide built-in slave relays in a compact and easy to wire package. This allows the low current outputs of the controller to switch on high current relays on the RelayPak.

Note: It is also possible to use the relayPak to sense DC voltages larger than 5 VDC (up to 39 VDC) using one of the Auxiliary Sensor Inputs set to a Universal Input such at Sensor Input D. Refer to drawing DWG1552 on our website for more information. If this capability is used Relay D cannot be used.

Electrical Specifications

Specification	Rating
Operating Voltage	12V / 24V
Output Pilot Duty Rating	5.83A Per Relay @ 12V
Output Resistive Rating	10A Continuous Per Relay @ 12V 40A Momentary Per Relay @ 12V
Relay Style	Automotive Cube
Standards	c UL us UL 6200 recognized component. Consult factory for UL conditions of acceptability.

WARNING: You must use relays in the RelayPak that are suitable for the system voltage. Example: 12V relays in a 12V system and 24V relays in a 24V system.

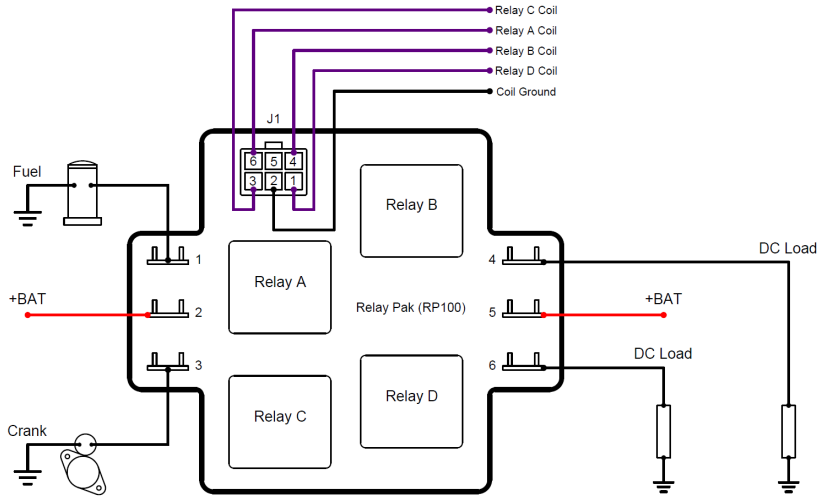

Schematic Representation

Relay Pak Connector	
J1-1	Relay D Coil
J1-2	Coil Ground
J1-3	Relay C Coil
J1-4	Relay B Coil
J1-5	
J1-6	Relay A Coil
1	Relay A Contact
2	A and C Common
3	Relay C Contact
4	Relay B Contact
5	B and D Common
6	Relay D Contact

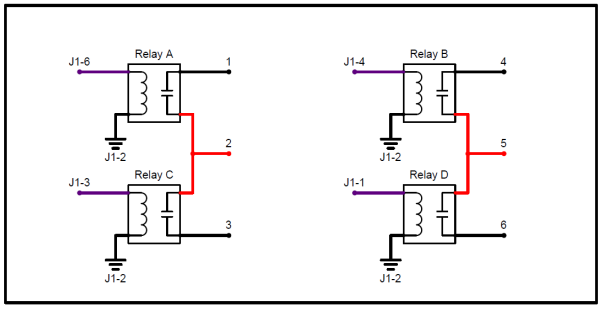

 © 2017 DynaGen Technologies Inc

2.6.8 J6 Speed Inputs

If the application is a generator the speed inputs on connector J6 are optional as the AC Voltage sensing inputs can be used to sense speed via the frequency.

The speed inputs are rated to a maximum of 50VAC.

Magnetic Pickup Sensor

The following must be followed:
(1) The sensor must be of a shielded type.
(2) A twisted pair shielded cable must be used for the connection.
(3) The shield must be connected to ground on one side only.
(4) One side of the sensor must be grounded in addition to connecting to the controller. Not grounding one side of the sensor can cause erratic behavior.

Requirements 1 to 3 can be ignored at the customer's own risk but item 4 must be followed otherwise unreliable operation may result.

The polarity of the speed inputs does not matter.

Other Speed Signal Sources

Other speed sources such as from an alternator or tachometer can be used but note that these are often very noisy and must be filtered before connecting to the speed inputs. Filtering means must be provided by the installer if required. Installer must determine suitability for their application. Dynagen does not provide any means of filtering and cannot guarantee compatibility.

 © 2017 DynaGen Technologies Inc

3 Pumping Applications

The TE Series of controllers are designed specifically with pumping applications in mind. The TE Series is capable of manual and automatic speed control.

- Manual - Manually adjusting the engine speed.
- Automatic - Automatically starting the engine, ramping up to a desired (goal) speed, and optionally controlling the engine speed to obtain a desired objective. An example of a desired objective is to maintain a certain flow rate in or out of a tank.

The next sections will cover these two options.

3.1 Manual Speed Control

Manual speed control allows the user to adjust the speed manually using the front panel UP (speed increment) and DOWN (speed decrement) buttons or via the speed increment / speed decrement switched inputs. Manual speed control is only enabled on a manual run. A manual run is performed by the RUN button on the front face or the key switch switched input function.

By using the "Run Button" setting under the Other Config > Pump System menu the user can:
- either adjust speed once idle mode has been reached during warmup, or,
- adjust speed until the engine has finished ramping up to the rated speed.

The amount the speed increments/decrements is determined by the Bump Speed setting under the Other Conifg > Ramp Setting menu. For every second the increment/decrement means is active the engine speed will be increment/decrement by the bump speed.

If the Bump Speed setting is disabled then the speed will increase 1 RPM/s with each button push and will increase to 10 RPM/s, 50 RPM/s, and 100 RPM/s each second until 100 RPM/s is obtained if the button is held down.

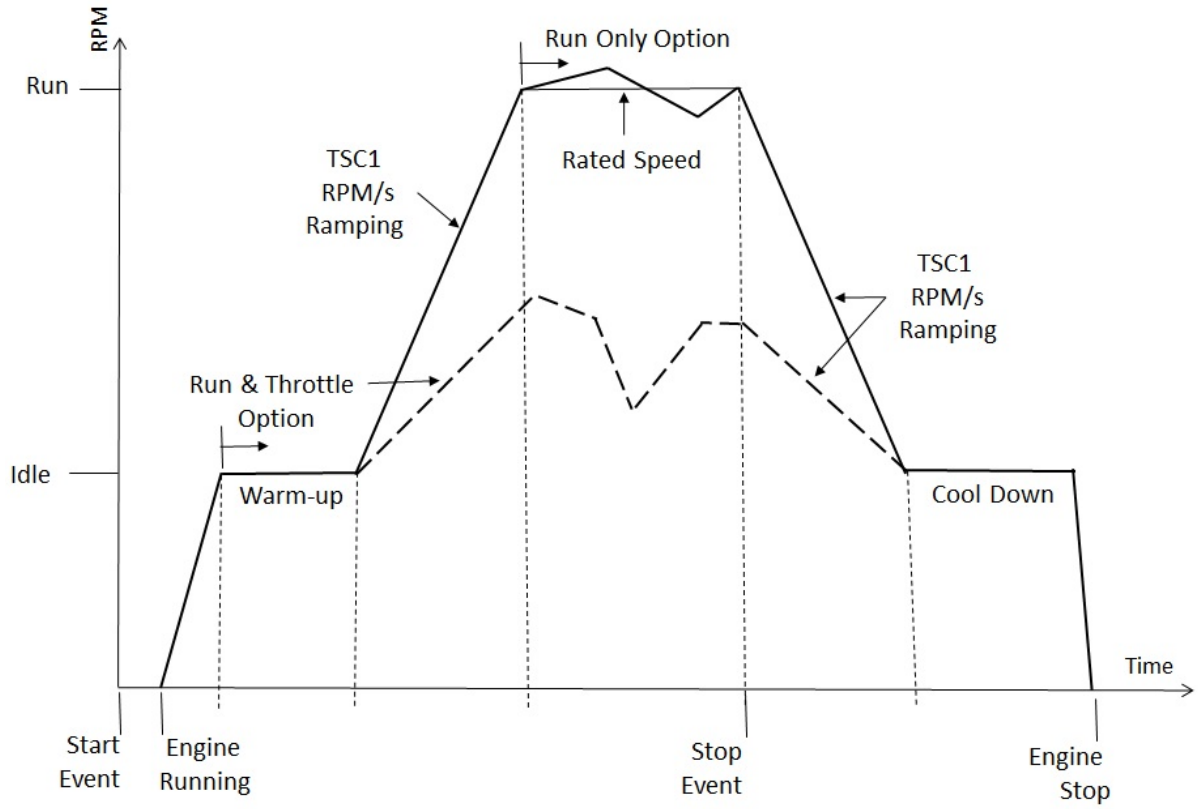

 © 2017 DynaGen Technologies Inc

3.2 Automatic Speed Control

Automatic speed control is triggered by an auto start condition. Auto start conditions include the Auxiliary Sensor Inputs and floats. This section will discuss the float auto start using single or dual float sensors.

Once an auto start has been initiated the engine will go through the ramp sequence until it reaches the goal speed. Once the goal speed has been reached the engine will remain at that speed. Process Control is an option (currently disabled, consult factory) that can take over once intermediate speed is finished.

Process control is an additional option that can be enabled. Process control uses the engine speed to control a process variable which is sensed by one of the auxiliary sensor inputs (Auxiliary Sensor 1 to 4 or Aux 5 (aka Transducer)).

3.2.1 Autostarting on Floats

Single or dual floats can be used as means to auto start and stop the engine based on a level of a tank. The below figures indicate how the engine responds to the floats.

If single float is used then only one of the Float 1 or Float 2 switch input function need to be enabled. If both float switched inputs functions are enabled then float 1 is used.

The float auto start means must be enabled by setting the Float Autostart setting under the Application > Function menu to Single or Dual. When "Float Autostart" is enabled a graphic indicating the positions of the floats is shown in a special page during RUN mode. This special page also indicates the current engine speed and optionally the tank level.

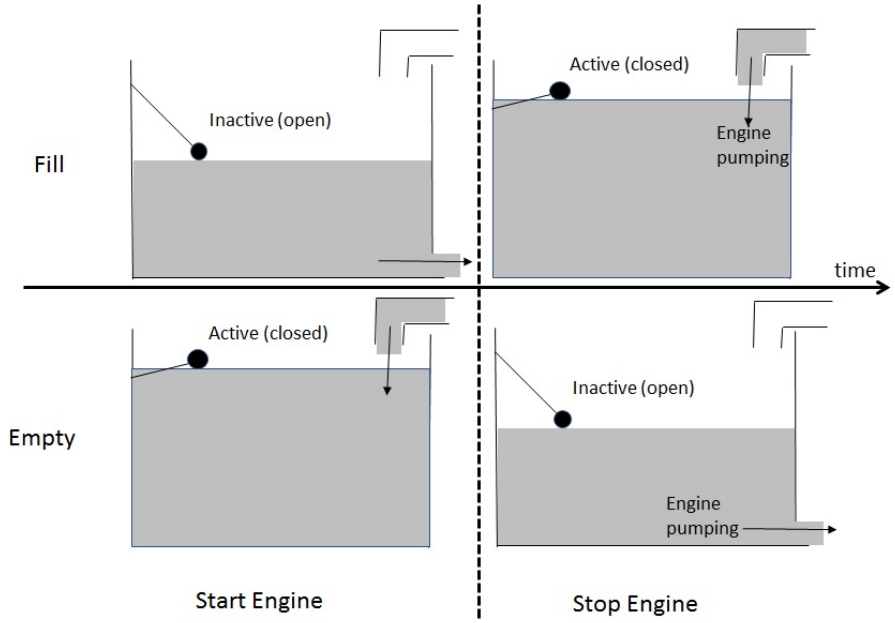

 © 2017 DynaGen Technologies Inc

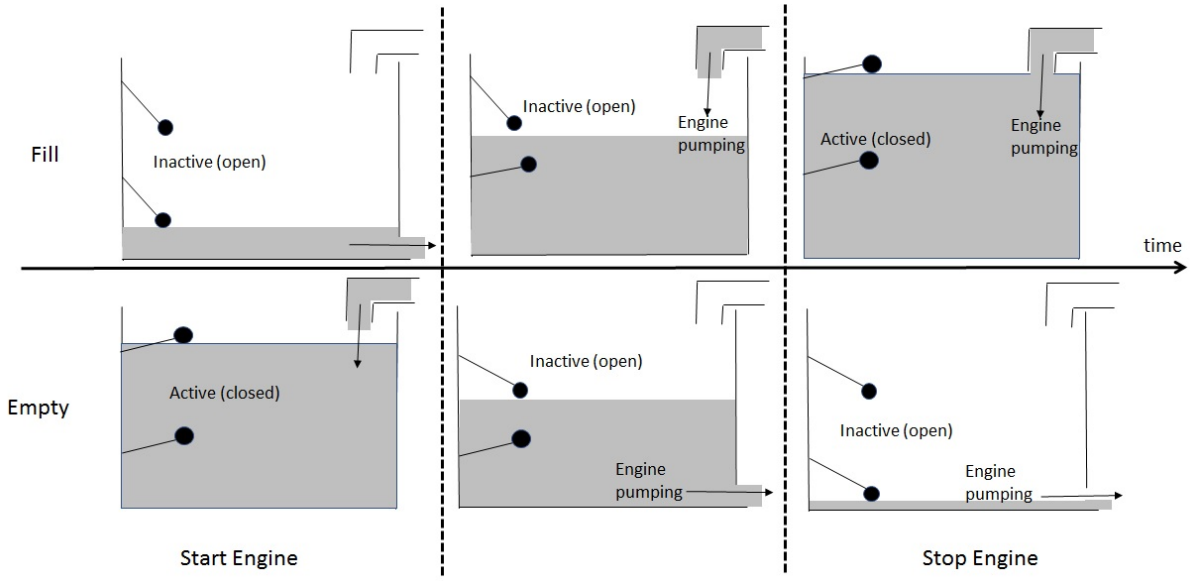

The Auxiliary Sensor 5 (Transducer) feature under the Application menu can be used as a safety shutdown or warning means in case of a float failure. The below figure demonstrates this functionality. In addition if the Transducer display setting is enabled a tank display graphic will be shown adjacent to the float indicators indicating the fill level of the tank.

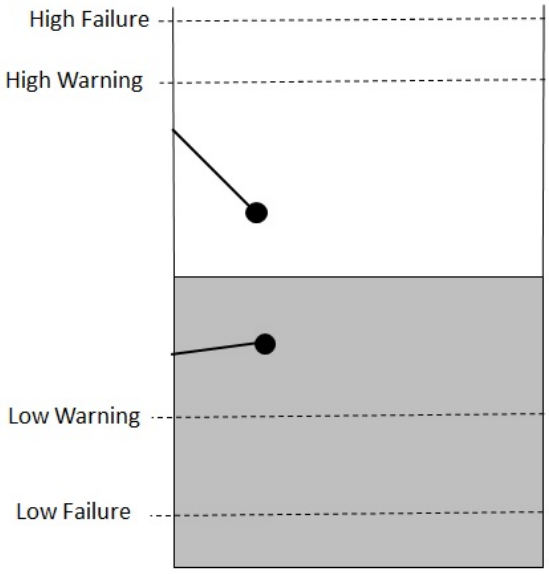

3.2.2 Ramp up and Intermediate Speed

Once an auto start is initiated the engine will go through a ramp up in speed until it reaches the goal speed. This is indicated in the below chart. Refer to the Other Config > Pump System menu for settings indicated in the below chart. The Warm-up and Cooldown times can be found in the Timers > Engine Logic menu.

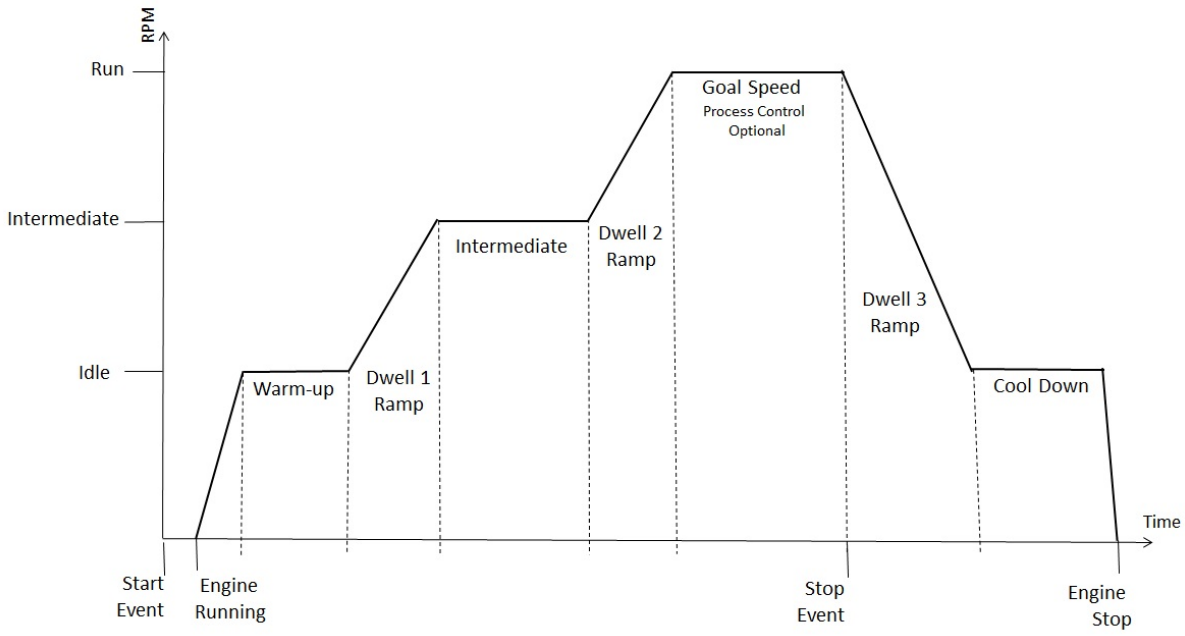

3.2.3 Process Control using Engine Speed

The process control feature that was in the TG350 / TG410 is currently not supported in the TE series.

3.3 Speed Limiting

There are three settings that control the absolute or change in speed for all speed control features. These settings can be used to prevent engine damage and/or provide a safety means for equipment users.

- The TSC1 RPM/s setting under Sensors > Engine Speed > RPM Control limits the rate of change in engine speed.
- The Min Speed and Max Speed settings under Other Config > Pump System limit the minimum and maximum engine speed respectively.

3.4 Electronic Engines

On newer engines, the TE350/TE410 usually controls engine speed by sending the J1939 TSC1 protocol over the CANbus to the electronic engine control module (ECM). The ECM is responsible for governing the engine, controlling emissions and providing engine protection. The following figure shows typically how these electronic engines are wired.

- Power / Ground - The ECM usually must be powered directly from the battery terminals.
- Keyswitch Input (Ignition Input) - There is usually an input on the ECM that wakes the ECM and tells it a start (crank cycle) is about to begin. The ECM then begins to monitor engine speed for start detection.
- Start SW Input - The input to indicate to crank or start the engine.
- CAN High / CAN Low (CAN-H, CAN-L) - The J1939 protocol bus that the ECM and TE350/TE410 use to communicate with one another. TSC1 (J1939 speed command) is sent over this bus as well as engine temperature, oil pressure, and other parameters.

 © 2017 DynaGen Technologies Inc

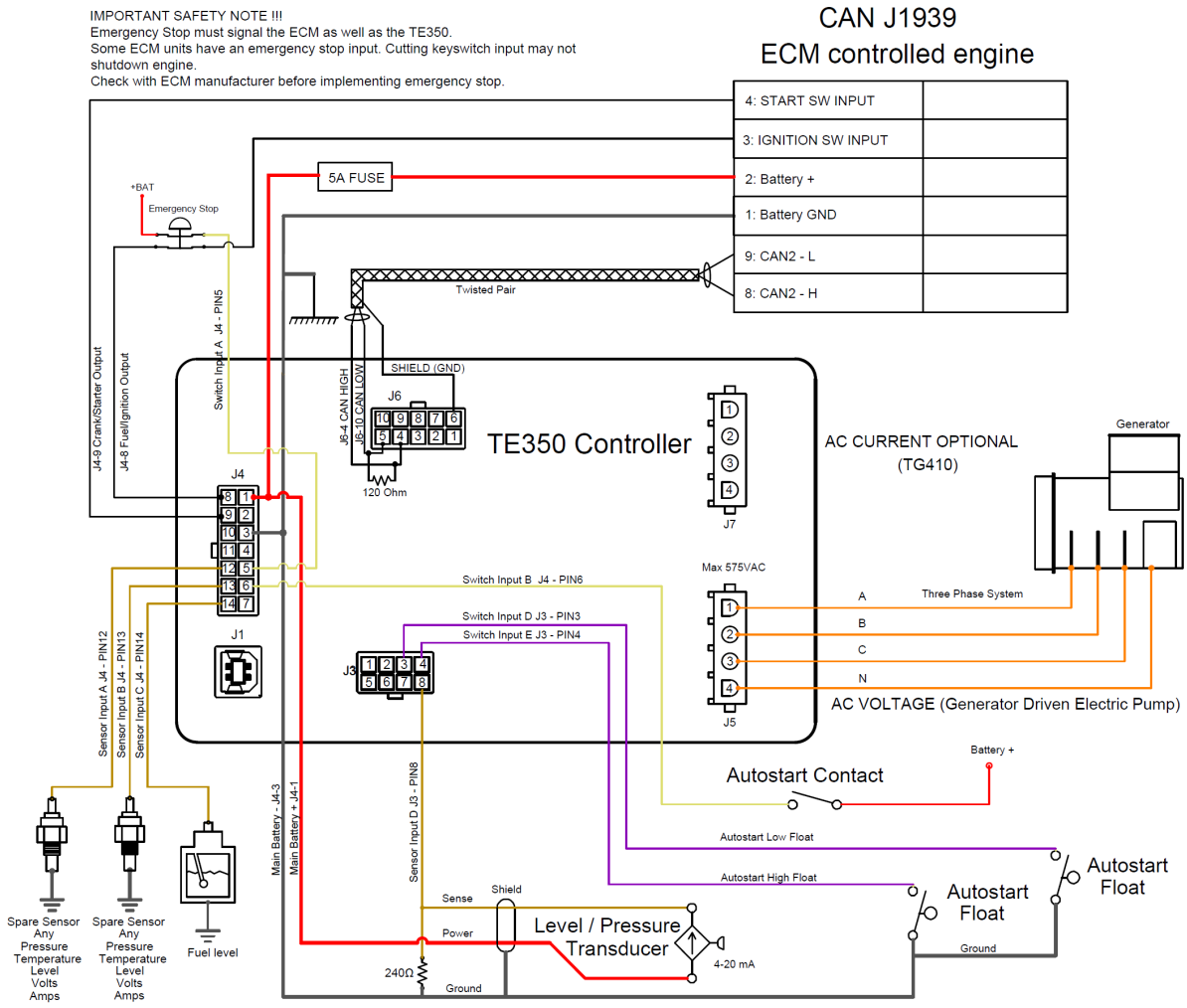

TE Series ECM Example
DWG-1556 R1.0

 © 2017 DynaGen Technologies Inc

4 Using the Controller

The LCD display is the primary source of information from the controller. It allows you to view/change settings and monitor the status of sensors and other engine peripherals.

LCD Display

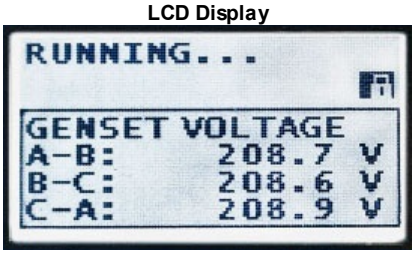

Using the Menu System

Task	Description
Entering Menu	When in the OFF mode, press the enter button to bring up the menu.
Navigating Menu	Once in the menu, use the up and down arrows to navigate. Pressing enter will move you into that menu.
Change a Setting	Scroll to the desired value and press enter to select. A check mark should appear beside that item. Press enter again to save the setting and return to the previous screen.
Scroll Parameters	When in Auto or Running mode, pressing the up and down arrows will scroll through the parameter pages.
Lock Screen	When in Auto or Running mode, the screen can be locked to a certain parameter page by pressing Auto and unlocked by pressing Auto again.
Events History	Once in the menu, select Events History to view the most recent controller event. Use the up and down arrows to navigate to other events. The controller can store up to 150 events. If more than 150 events occur, the oldest event is deleted to make room for the next event.

Front Panel Items

Item	Name	Description
	Off Button	Used for turning off the engine or exiting out of Auto mode. This is not intended to function as an Emergency Stop as there are conditions in which it will not shut down the engine. See the OFF Button Function section for more information.
	Auto Button	Used for placing the controller into AUTO mode or locking the LCD screen when viewing parameters. Once in AUTO mode, the controller waits for a start command to be received.
	Run Button	Used to start the engine manually. The Off button must be used to shut down the engine if it has been started using the front panel.
	Up/Speed Increment Button	Used for moving around in the menu, changing a setting's value, or incrementing the engine speed in manual mode.
	Scroll/Enter Button	Used for entering the menu system, accepting settings, or changing the currently displayed parameter page.
	Down/Speed Decrement Button	Used for moving around in the menu, changing a setting's value, or decrementing engine speed in manual mode.
	Generator/Engine LED	Green = Engine running with no issues Amber = Engine running with warnings Red = Engine shut down on failure

© 2017 DynaGen Technologies Inc

4.1 Modes, Starting and Stopping

The following table describes the different operating modes of the controller:

Modes

Mode / State	Description
OFF	When in the OFF mode, the engine cannot be remotely started.
Auto	When in the Auto mode, the engine waits to receive a start command.
Running	When engine is Running, the controller monitors engine parameters and waits to receive a stop command.
Failure	When a failure occurs, the controller shuts down the engine and displays the reason for failure. The unit must be reset using the front panel OFF button with the exception of Modbus.
Menu	When in the menu mode, settings can be changed and the events history may be viewed.

The following table describes the different methods for starting a controller. Unless using the Manual Run method to start the controller, the controller must be in AUTO mode.

Starting Methods

Methods	Description
Manual Run	Pressing the Run button will start the engine. You must press the OFF button to shut down the engine.
Keyswitch Start	Manual start via the key switch switched input. A switched input must be set to keyswitch function.
Start / Stop Switched Input	When this input is active the engine will start. When the input becomes inactive the engine will shut down.
Momentary Switched Inputs	Switched inputs Momentary Start and Momentary Stop can be used for starting and stopping of the engine. Unlike other inputs, they only have to be activated for a short period of time.
Battery Recharge	When the battery voltage drops below a certain level the engine will start and run for a predetermined amount of time.
Exerciser	When the scheduled exerciser interval occurs the engine will start and run for a predetermined amount of time.
Weekly Scheduler	When a scheduled event occurs the engine will start and run for the programed amount of time.
Auxiliary Sensors	When a properly configured Auxiliary sensor falls below / rises above a certain point the engine will start as determined by the Auxiliary Sensors -> Mode Select settings.
Modbus Start	When a certain command is sent to the controller over Modbus the engine will start. See the Modbus Reference Manual for more information.
J1939 Start	Start/stop command send over the J1939 CANbus. For example from the TR100 or a remote telemetry device. The controller will display either "J1939 Run" or "J1939 Remote" as the reason for starting.
Float Auto Start	Start triggered by the float 1 or float 2 switched inputs.
ECM Power On	This is not a starting mode like the others. In AUTO mode if the Auto button is held for 3s the fuel output is turned on for 1 hour. "ECM Power On" will be displayed on the screen. Pressing and holding again within the hour will refresh for another hour. This feature can be used to turn on or activate equipment powered by the fuel output. Often this is used by a tech to power the ECM on an electronic engine so a diagnostic tool can obtain information from the ECM.



WARNING: See the Using Cooldown Mode section for more information on how it affects starting and stopping.

© 2017 DynaGen Technologies Inc

4.2 Speed Control Page

The speed control page is the default page that is shown when the controller is running (RUN mode). It is also displayed in AUTO mode. Scrolling to other pages can be done using the Enter button. After 30 seconds of button inactivity the controller will revert back to the speed control page.

The speed control page displays the engine speed, the float tank (if float auto start is enabled), and the tank level (if Transducer under the Application menu is enabled and Transducer Display is enabled).

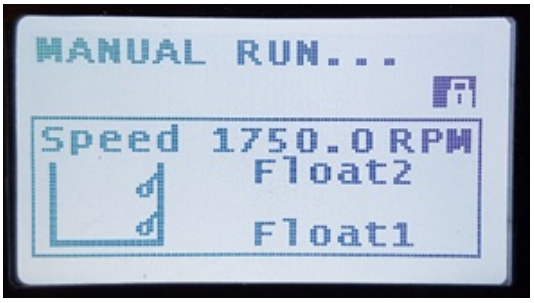



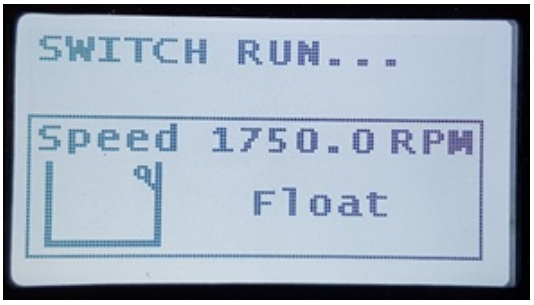



4.3 Four Parameter Display Pages

There are two special pages that can display four parameters each. These two pages must be setup used the RapidCore Configuration Software.

The choices of parameters are:

- Blank (no parameter displayed for that line)
- Engine Speed
- Battery
- AC Frequency
- Current Run Time
- Engine Hours
- Oil Pressure
- Fuel Level
- Engine Coolant Temperature

If all four lines in a page are set to Blank then the page is not displayed. If two adjacent rows are set to blank the rest of the 3 pairs of rows move up into the two blank rows' area. This means there cannot be more than one blank line in a row.

Parameters can be place on more than one line.

 © 2017 DynaGen Technologies Inc

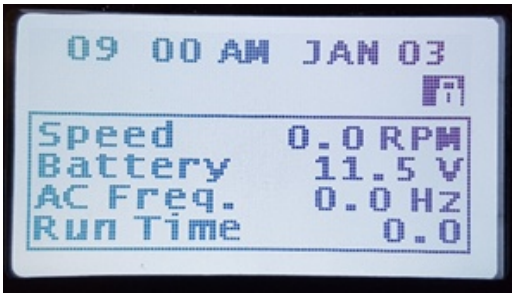

4.4 DM1 Page

The DM1 special page is used to display diagnostic trouble codes (DTCs) from an electronic engine module (ECM). If the engine broadcasts a DTC then the DM1 page will appear for 5s or until the user scrolls away. It will be disappear and will reappear 50 seconds latter if the DTC is active.

The controller LED indicator will also turn amber to indicate a warning condition.

<Need photo of DM1 page>

4.5 Using Cooldown Mode

When the controller is configured to have a cooldown period (See Engine Logic section) for the engine, there is some special functionality that must be considered.

The cooldown period is special in that during this time, it will accept a Start Command. This means if the engine is cooling down and a start command is received, the controller will be placed back into a running mode and will not shut down.

Example: The following is an example of how the cooldown functionality works.

1. Remote Start contacts close
2. Engine starts and is in the running mode
3. Remote Start contacts open
4. Engine starts cooldown period
5. User presses RUN button on the front panel
6. Engine moves back into running mode and does not shut down
7. Engine can now only be shut down by using the OFF button or Emergency Stop input

 © 2017 DynaGen Technologies Inc

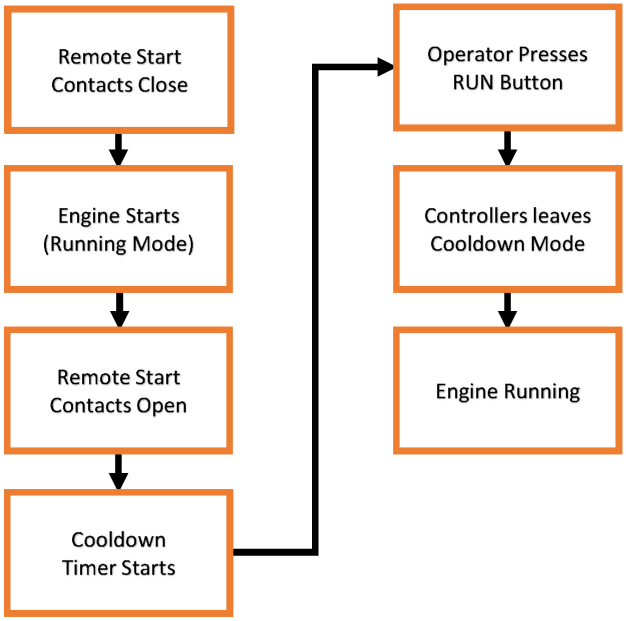

4.6 Warnings

Warnings are conditions that alert the user to possible issues. These get enabled/disabled when you enable/disable various settings in the controller.

Notable warnings are given in the below table.

Warning Name	Enabled Condition(s)	Description
High Fuel Level	High Fuel Level not disabled (in Sensors > Fuel Level menu).	High Fuel Level warning. This is often used to indicate an over fueling condition where fuel could be overflowing from the fuel tank.
Low Engine Temp	Low Engine Temp not disabled (in Sensors > Engine Temp. menu).	Low Engine Temperature warning. This is often used to indicate a malfunction of the engine block heater in stationary generator applications.
Low Oil Pressure	Switched input set to "Oil Pres. Warn" function. See Switched Inputs. Triggered if switched input is active during the RUN mode.	Low oil pressure warning.

4.7 Failures

Failures are conditions that cause the controller to shutdown to prevent damage to the engine or generator. These get enabled/disabled when you enable/disable various settings in the controller.

Notable failures are given in the below table.

Failure Name	Enabled Condition(s)	Description
ECM Communication Failure	Enabled if loss of ECM communication is enabled. See CAN Bus (J1939). J1939 feature.	If the controller has not received messages from the ECM for 6s.
Exception*	Always enabled.	Occurs when there is an issue that the controller cannot recover from. For example EMI can cause the microcontroller to become in a bad state or a software bug could cause the code to hang triggering the watchdog. In these cases the controller will reset and enter the failure state.

 © 2017 DynaGen Technologies Inc

Failure Name	Enabled Condition(s)	Description
		*The name is configurable so may not match what is here.
Failure To Stop	Disabled when ETS On Duration is set to 0 seconds. Otherwise it is enabled. ETS should be set to at least 2 to 3s otherwise this failure may not occur. Engine Speed feature.	After ETS countdown is finished if the speed was greater than 50RPM for the previous 2s then the controller triggers this failure.
Load Imbalance	See Load Imbalance. AC Current feature.	Generator load imbalance. Excessive AC current on one or more of the three phases.
Low Air Pressure	Switched input set to "Air Pres. Fail" function. See Switched Inputs. Triggered if switched input is active during starting.	Application specific.
Low Coolant Lvl	Switched input set to "Cool. Lvl Fail" function. See Switched Inputs. Triggered if switched input is active.	Low Coolant Level.
Low Hydraulic	Switched input set to "Hyd Pres. Fail" function. See Switched Inputs. Triggered if switched input is active during starting.	Refers to Low Hydraulic pressure usually. Application specific.

If Battle Mode (see Battle Mode in switched inputs) is active ('Battle Running' is displayed on the screen) the controller will not shutdown on a failure and no failure information will be displayed on the screen. If battle mode is switched off the controller will shutdown on any failure that occurred when battle mode was active.

4.8 Event Log

The event log contains the following events

Event Name	Event Type	Description
J1939 Start	Notice	Controller started from J1939 using the second J1939 start/stop method. Refer to the J1939 user guide for more information. This is often used by telemetry devices to start/stop the controller.

 © 2017 DynaGen Technologies Inc

5 Settings

The following section relates to settings that can be changed to alter the way the controller performs its functions. Read and review these sections carefully to ensure your settings are set correctly for your engine.

5.1 Application Menu

The application menu allows end users to easily adjust parameters related to their specific application. It is not password protected.

It consists of the six sub menus. All sub menus, with the exception of the Float Autostart setting under the Function menu and the Transducer menu are a mirror of their corresponding setting in the main menu.

Name	Description
Function	Float autostart enable/disable, dual/single floats, and closed loop control adjustments.
Throttling	Adjust intermediate speed and various dwell times. RPM control increment amount.
Transducer	Similar to Auxiliary Sensors but this can be linked to the tank display during run and pressure quantities can take on negative values (down to -9.9 psi). Allows the setup of a sensor input with simplified Auxiliary Sensor like functionality such as warning/failure setpoints and auto start.
Closed Loop	More detailed settings on the operation of the closed loop control.
Week Scheduler	Set days and times to run the engine.
Long Time Run	Allows user to specify the length of time the engine will run when manually started. Engine is automatically shutdown when the time ends.

5.1.1 Function Menu

Name	Range	Description
Float Autostart	Disable, Single Float, Dual Float	Determines the float control system type.
Floats	Disable, Fill Tank, Empty Tank	This is a mirror of the same setting in the Other Config > Pump System menu.
Maintain Setup	Disable, Maintain In, Maintain Out	This is a mirror... Enables the process control using engine speed.

5.1.2 Throttling Menu

Name	Range	Description
RPM Settings	Sub Menu	-----
RPM Settings > Idle RPM	300 ~ 2000 RPM in 1 RPM increments	This is a mirror of the Idle Speed setting under Sensors > Engine Speed. It determines the speed of the engine in idle mode.
RPM Settings > Interm RPM (Intermediate Speed)	500 to 4000 RPM in 1 RPM increments	This is a mirror of the Intem Speed under Other Config > Pump System.
RPM Settings > Rated RPM	500 ~ 4000 RPM in 1 RPM increments	This is a mirror of the same setting under Sensors > Engine Speed. It determines the final engine speed.
RPM Settings > Goal RPM	500 ~ 4000 RPM in 1 RPM increments	This is a mirror of the "Goal Speed" setting under Other Config > Pump System.
Dwell Times	Sub Menu	-----
Dwell Times > Warm-up	0 ~ 600 s in 5 s increments	This is a mirror of the "Warmup Time" setting under Timers > Engine Logic.

 © 2017 DynaGen Technologies Inc

Name	Range	Description
Dwell Times > Interm	1 to 300 s in 1 s increments	This is a mirror of the "Interm Delay" setting under Other Config > Pump System.
Dwell Times > Cooldown	0 ~ 600 s in 5 s increments	This is a mirror of the "Cooldown Time" setting under Timers > Engine Logic.
Ramp Times	Sub Menu	-----
Ramp Times > Dwell 1 (Idle to Intermediate)	1 ~ 300 s in 1 s increments	These are mirrors of the same settings under Other Config > Pump System.
Ramp Times > Dwell 2 (Intermediate to Rated)	1 ~ 300 s in 1 s increments	
Ramp Times > Dwell 3 (Rated to Idle)	1 ~ 300 s in 1 s increments	
Ramp Times > TSC1 RPM/s	Disable, 10 ~ 300 RPM/s in 10 RPM/s increments	This is a mirror of the same setting under Sensors > Engine Speed. Changes in engine speed are limited to this maximum.
Bump Speed	Disable, 0 ~ 500 RPM in 1 RPM increments	This is a mirror of the same setting under Other Config > Pump System. It determines the increment in engine speed when doing a manual speed adjustment.

5.1.3 Transducer Menu

Name	Range	Description
Signal Source	Sub Menu	----
Signal Source > Source	Disable Port A Port B Port C Port D	The sensor input to use for the Transducer feature or set to Disable to disable this feature.
Signal Source > Display	Enable, Disable	Set to enable to display the value of the transducer and the tank icon when the controller is in RUN mode.
Signal Source > Start On	Disable, Low, High	Set an automatic start when signal goes below or above the Start threshold.
Signal Source > Offset	-50.0 ~ 50.0 in 0.1 increments	This applies an offset to the transducer value. This can be used for calibration.
Sender Type	Custom TF1 115F/R240 TF2 231F/R240 TP1 200P/R240 TP2 100P/R240	The sender table to use. A customer sender table can be defined (using the RapidCore Configuration Software) or one of four predefined sender tables can be selected. TF1/TR2 are float sensors. 115F/R240 means it has a range of 115 ^{0}F at 240 Ohms. TP1/TP2 are pressure sensors. Contact DynaGen for more information.
Start Stop	Sub Menu	----
Start Stop > Bypass Time	0 ~ 90 s in 1 s increments	The amount of time to ignore the sensor for warning and failure determination.
Start Stop > Run Time	1 ~ 600 min in 1 min increments	The length of time to run the engine on a Low or High auto start.
Start Stop > Start	0.1 ~ 110 % / ft in 0.1 % / ft increments -9.9 ~ 100 psi in 0.1 psi increments	The threshold at which to start the engine. The "Start On" setting above determines which direction the threshold must be crossed.
Start Stop > Stop	0.1 ~ 110 % / ft in 0.1 % / ft increments -9.9 ~ 100 psi in 0.1 psi increments	The threshold at which to stop the engine. The "Start On" setting above determines which direction the threshold must be crossed.

© 2017 DynaGen Technologies Inc

Name	Range	Description
Thresholds	Sub Menu	-----
Thresholds > Low Warn	Disable 0.1 ~ 110 in 0.1 % / ft increments -9.9 ~ 100 psi in 0.1 psi increments	The low warning setpoint.
Thresholds > Low Fail	Disable 0.1 ~ 110 % / ft in 0.1 % / ft increments -9.9 ~ 100 psi in 0.1 psi increments	The low failure setpoint.
Thresholds > High Warn	Disable 0.1 ~ 110 in 0.1 % / ft increments -9.9 ~ 100 psi in 0.1 psi increments	The high warning setpoint.
Thresholds > High Fail	Disable 0.1 ~ 110 % / ft in 0.1 % / ft increments -9.9 ~ 100 psi in 0.1 psi increments	The high failure setpoint.

When the transducer is enabled when the controller is in the RUN mode a tank graphic will be displayed.

5.1.4 Closed Loop Menu

These settings mirror those of the same name in Other Config > Process Control.

Name	Range	Description
Parameters	Sub Menu	-----
Parameters > Delay	1 ~ 30 s in 0.1 s increments	The control loop delay and gain. The control gain. The Delay and Gain settings affect how regressive the control is too changes.
Parameters > Gain	1 ~ 30 in 0.1 increments	
Maintain	Sub Menu	-----
Maintain > Main-In	1 ~ 900 in 0.1 increments	The goal value to maintain when the process control feature is set to Maintain-In or Maintain-Out. Engine speed is adjusted to maintain these values. Only one it used at any given time. See Maintain Setup setting in Application > Function menu.
Maintain > Main-Out	1 ~ 900 in 0.1 increments	
Maintain > Deadband+	1 ~ 30 in 0.1 increments	Values in this range do not cause any change in engine speed.
Maintain > Deadband-	1 ~ 30 in 0.1 increments	

5.1.5 Set Scheduler Menu

These settings mirror those of the same name in Timers > Schedulers.

Name	Range	Description
Scheduler #1	Sub Menu	-----
Scheduler #1 > Weekday	Monday ~ Sunday	The day of the week to run the engine.
Scheduler #1 > Start Time	0:00 ~ 24:00 in 1 min increments	The start time in 24hour clock notation.
Scheduler #1 > Run Time	10 ~ 1440 min in 1 min increments	The amount of time to run the engine.
…	…	…

 © 2017 DynaGen Technologies Inc

Name	Range	Description
Scheduler #16	Sub Menu	... There are a total of 16 seperate schedulers than can be programmed.
Scheduler #16 > Weekday	...	...
Scheduler #16 > Start Time	...	...
Scheduler #16 > Run Time	...	...

5.1.6 Long Time Run Menu

These settings mirror those of the same name in Timers > Long Time Run

Name	Range	Description
Start Trigger	Disable Manual Start	If set to "Manual Start" enables timed shutdown after the time given in "Run Duration" below. This timer only applies to a manual start.
Run Duration	1 ~ 5000 hours (> 208 days) in 1 hour increments	The amount of time to allow the engine to run before shutting it down.

5.2 Operator Setup

The following settings are used to change the way the user interacts with the controller. They are not password protected and can be changed by anyone from the front panel.

Name	Range	Description
Lamp Test	Function	Performs a lamp test on the LEDs when selected.
Display -> LCD Reverse	Function	Reverses the white and black pixels when selected.
Display -> LCD Contrast	5 ~ 95%	Changes the contrast of the LCD.
Display -> Page Scroll	1 ~ 10 seconds	Amount of time between each auto scroll of the parameter pages.
Display -> Message Pop-Up	1 ~ 10 seconds	Amount of time each message is displayed on the screen before displaying next message in the buffer.
Display -> DPF/DEF Display Time	0 ~ 10 seconds	See DPF/DEF aftertreatment in the J1939 Reference Manual for more information.
Display -> LCD Backlight Timeout	10 ~ 600 seconds	Amount of time the LCD Backlight stays on after button activity stops.
Date / Time -> Date Change	1 ~ 31 days 1 ~ 12 months 2000 ~ 2099 years	Sets the date.
Date / Time -> Time Change	0 ~ 23 hours 0 ~ 59 minutes 0 ~ 59 seconds	Sets the time.
Date / Time -> Daylight Savings	Enable ~ Disable	Turns Daylight Savings Time on or off. This applies to North America only. Disable for other locations.
Units -> Temperature Unit	°F or °C	Selects the temperature display format.
Units -> Pressure Unit	PSI or kPa	Selects the oil pressure display format.
Run from OFF	Enable ~ Disable	When enabled, allows a user to start the engine using the run button while in the OFF mode. When disabled the controller must be placed in AUTO mode before the run button can start the engine.

 © 2017 DynaGen Technologies Inc

5.3 Switched Inputs

The controller has switched inputs which cause the controller to perform a function when activated.

Switched I/O > Switched IN X:

Name	Range	Description
Function	[Menu] See below.	The function that the switched input performs when active.
Active Mode	[Menu] See below.	Determines the operating conditions under which the switched input can be active. Multiple selections are allowed.
Trigger	[Menu] See below.	The state of the input determining if it is active or inactive.

Switched I/O > Switched IN X > Function:

Name	Active Mode	Description
Disabled	N/A	Input is disabled and has no function.
Start / Stop	Auto, Running	Starts the engine when active, stops the engine when deactivated. It is recommended to set the Trigger mode to Close +BAT for better noise tolerance.
Emergency Stop	Global	When active, shuts down the engine, displays Emergency Stop, and prevents leaving the OFF mode. CAUTION !!! This should only be used for emergency stop indication on the controller. The installer must provide an independent means to shut down the engine from the emergency stop button such as cutting off fuel. See the typical wiring diagrams for an example on how to wire up the emergency stop.
Idle Mode	Running	See the Idle section under Engine Logic for more information.
Voltage Select 1	Auto	Used for changing the system AC voltage configuration. See AC Voltage Select for more information.
Voltage Select 2	Auto	
Charger Fault (Battery Charger Fault)	Global	Controller displays 'Charger Fault' warning when active.
Mom. Start (Momentary Start)	Auto	Starts or stops the engine when momentarily active (Approximately 2 seconds). These inputs allow the user to wire separate inputs for start and stop or to use a push button instead of a toggle switch.
Mom. Stop (Momentary Stop)	Running	
Configurable Warning 1	Configurable	Controller displays a warning or failure with configurable text* when active. In the case of the configurable failures a shutdown is also performed. The RapidCore Configuration Software must be used to change the text.
Configurable Warning 2	Configurable	
Configurable Failure 1	Configurable	
Configurable Failure 2	Configurable	
Configurable Failure 3	Configurable	
Air Press. Fail (Air Pressure Failure)	Cranking	Controller displays 'Low Air Pressure' and shuts down engine when active.
Hyd Pres. Fail (Low Hydraulic Pressure Failure)	Cranking	Controller displays 'Hydraulic Pressure Failure' and shuts down engine when active.
Oil Pres Warn (Low Oil Pressure Warning)	Running	Controller displays 'Oil Pressure Warning' when active.
Cool. Lvl Fail (Low Coolant Level Failure)	Global	Controller displays 'Low Coolant Lvl' and shuts down engine when active.
High Fuel Warning	Global	Controller displays 'High Fuel Level' warning when active.
Lamp Test	Global	Controller performs lamp test when active. If the controller is in the FAILURE mode the LED will remain red. The only indication that the lamp test is

 © 2017 DynaGen Technologies Inc

Name	Active Mode	Description
		active is the LED indicator will alternate between the green and red colors. The LED goes back to it's original state when the switched input is no longer active.
Fuel In Basin	Global	Controller displays 'Fuel In Basin' warning when active.
Battle Mode	After Cranking	Controller ignores all warnings and failures when active. Displays 'Battle Running' when active. If a failure occurs during Battle Mode it is 'latched' and the engine will shutdown on failure when the controller leaves Battle Mode.
Start Inhibit	Global	Controller ignores all start commands and the engine cannot start when active. Once Start Inhibit becomes inactive, starting is enabled again. If the engine is running, activating this input will shut down the engine.
RPM Switch (Primary RPM / 60Hz - Secondary RPM / 50Hz Select)	Auto	Used for changing between Primary and Secondary RPM for an engine or 50Hz / 60Hz for a generator. See RPM / Frequency Select for more information.
ECM Preheat (ECM Preheat Signal)	Cranking (during the Preheat countdown only)	Controls preheating using a switched input. See Switched Input in the Preheat Mode section.
Remote Reset	Global	Allows the controller to be reset from a failure mode. - Momentary action for 3 - 5s in FAILURE mode will place the controller in OFF mode. - Momentary action for 3 - 5s in OFF mode will place the controller in AUTO mode. - Momentary action for 3 - 5s in RUN mode will place the controller in AUTO mode. Cool-down is skipped.

TE350 / TE410 Specific Functions

Name	Description
Key Switch	Starts the engine. Equivalent to a manual start. Displays "Keyswitch Start" as the start reason.
Speed Increase	Similar to pressing the front panel Up (speed increment) or Down (decrement buttons). Front panel button has priority. Refer to Manual Speed Control in the Pumping Applications chapter for more information.
Speed Decrease	
Float Input 1	The connection for float sensor 1 and 2 which are used as an auto start means. Refer to the float autostart section in the Pumping Applications chapter and the Pump System section for more information.
Float Input 2	

NOTE: More than one Active Mode can be selected.

The active modes is only configurable if the Function menu is set to one of the configurable switched input functions. It is fixed for all other functions.

Switched I/O > Switched IN X > Trigger:

Name	Description
Close +BAT	Input is active when +Battery is present at the terminal.
Close GND	Input is active when Ground is present at the terminal
Close +BAT/GND	Input is active when either +Battery or Ground is present at the terminal.
Open	Input is active when neither +Battery or Ground is present at the terminal.

NOTE: When running wires over long distances (over 20ft / 6.1m), it is recommended to use +BATTERY as the trigger method.

 © 2017 DynaGen Technologies Inc

5.3.1 Configurable Inputs

These inputs are used to create custom warnings and failures. Using the RapidCore Configuration Software you can change the text displayed when the warning or failure occurs. If you select one of these inputs without changing the text it will default to 'Config Warn X' and 'Config Fail X.'

There are also timers associated with the configurable inputs which can be found in the menu under *Timers* > *Trigger Delays* > *Config Inputs and Config Fail 3*. These timers change the amount of time the input has to be active before the controller registers the warning or failure.

NOTE: If the switched input becomes inactive before the trigger delay time expires, the warning or failure will not occur.

Example: The user wants a pump to turn on 30 seconds after a high water level switch is tripped and remain on until the level switch turns off.

The level switch is connected to Switched Input C and closes to ground when the water level is too high. The words 'Water Pumping' are also required to be displayed on the controllers LCD screen. The pump is connected to a slave relay which is controlled by Switched Output D on the controller.

Relevant Settings

Setting	Value
Switched Input C -> Function	Configurable Warning 1
Switched Input C -> Active Mode	Global
Switched Input C -> Trigger	Close GND
Configurable Warning 1 Custom Text	Water Pumping
Switched Output D -> Warnings	Configurable Warning 1

5.4 Switched Outputs

The controller has switched outputs that are turned on under certain conditions to perform a function. The outputs turn on to +Battery voltage to drive the load when active. The following items are the available functions for switched outputs.

WARNING: Switched outputs have a floating voltage of approximately 8V when off. If using the outputs for digital logic, it will be necessary to put a pull-down resistor (1 kOhm) from the output to ground to ensure a low logic level when output is off.

Event Functions

Name	Active Mode	Description
Fuel	Cranking, Running	Active during cranking and running to supply fuel to engine.
Crank	Cranking	Active during cranking to start the engine.
Pull Coil	Cranking	See Pull and Hold Coil section for more information.
LCD Backlight	Global	Active when LCD Backlight is active.
Voltage Regulator	Running	Active when engine is starting/running and is not in Idle Mode.
ETS (Energize to Stop)	ETS Timer	Active during Energize to Stop timer.
Off Mode (Not In Auto)	Off	Active when the controller is in the OFF mode.
Idle Mode	Idle Mode	Active when Idle Mode switched input is active.
Battle Mode	Battle Mode	Active when Battle Mode switched input is active.
System OK (System Ready)	Auto, Run	Active when the controller is in the AUTO and RUN mode and no warnings or failures are present.
Delay to Start	Delay to Start Timer	Active when the Delay to Start timer is active.
Glowplug	Preheat, Midheat, Postheat	Active during the Preheat, Midheat and Postheat timers.

 © 2017 DynaGen Technologies Inc

Name	Active Mode	Description
Warmup	Warmup Timer	Active after Warmup timer has expired to apply load to engine.
Cooldown	Cooldown Timer	Active when Cooldown timer is active.
Engine Running	Running	Active after crank success.
Exercising	Exercise Timer	Active during the engine exercising cycle.
Batt. Recharge (Battery Recharge)	Battery Recharge Timer	Active during the battery recharge cycle.
Maintenance (Maintenance Required)	Global	Active when Maintenance timer has expired. If the timer has expired when the controller is in the RUN mode the output does not turn on until the controller enters the OFF or AUTO mode. See the Maintenance section.
LowBat InCrank (Low Battery During Cranking)	Cranking	Active when Low Battery During Cranking warning is displayed.
Aux Sensor 1	Auxiliary Settings Dependent	Active dependent upon settings in the Auxiliary sensor section.
Aux Sensor 2		
Aux Sensor 3		
Aux Sensor 4		
Force Regen	User Controlled	When user triggers a Force Regeneration, output is active for 20 seconds then switches off.
Regen Inhibit	User Controlled	When user triggers a Regeneration Inhibit, output is active for 20 seconds then switches off.
Common Failure	Any Failure	Active when any failure occurs.
RPM Increment	Running	Output is used to to trigger inputs on an ECM to control speed. See Front Panel Speed Control section for more information.
RPM Decrement	Running	Output is used to to trigger inputs on an ECM to control speed. See Front Panel Speed Control section for more information.
DEF Fluid Pump	Running	Active when DEF Fluid Level falls below the DEF Low Level and stays active until the level rises above the DEF High Level. See CAN Bus (J1939) section for more information.
Genset Disable	Global	Disables the generator during a stationary Regen on Kubota engines (see Aftertreatment in the J1939 User Manual) or also during an engine IDLE condition from the IDLE switched input. Automatic idle is ignored. If the generator voltage is not below the under voltage setpoint in 10s, the controller will shut down the engine on "Generator Disable Failure."
Dummy Load	Running	Output is controlled by the dummy load feature.
Breaker Trip	Running	Output is controlled by the Over Current Failure or IDMT features and by the Load Imbalance feature.
Auto Idle	Warm-up, Cooldown	Active when the warm-up or cooldown idle is active. See Warm-up Idle and Cooldown Idle in Engine Logic. This does to react to the Idle switched input.

Warning Functions

Functions			
Low Engine Temperature	High Engine Temperature	Low Oil Pressure	Under Speed
Over Speed	Low Fuel Level	High Fuel Level	Low Battery Voltage
High Battery Voltage	Under Frequency	Over Frequency	AC Under Voltage
AC Over Voltage	Over Current	Fuel In Basin	Battery Charger Fault
Configurable Warning 1	Configurable Warning 2	Auxiliary Sensor 1	Auxiliary Sensor 2
Auxiliary Sensor 3	Auxiliary Sensor 4		

© 2017 DynaGen Technologies Inc

Name	**Active Mode**	**Description**
Load Imbalance	Running	AC current phases do not match. (More Information)
DTC Received. (DTC/MIL)	Running	Active when controller receives a DM1 from the ECM.

Failure Functions

Functions			
Overcrank	Engine Failed to Stop	DM1 Stop Lamp	High Engine Temperature
Low Oil Pressure	Low Fuel Level	Under Speed	Over Speed
Low Battery Voltage	High Battery Voltage	Low Coolant Level	Low Air Pressure
Low Hydraulic Pressure	Under Frequency	Over Frequency	AC Under Voltage
AC Over Voltage	Over Current (TG410 only)	ECM Communication Failure	Configurable Failure 1
Configurable Failure 2	Config Fail 3	Auxiliary Sensor 1	Auxiliary Sensor 2
Auxiliary Sensor 3	Auxiliary Sensor 4		---

Name	**Active Mode**	**Description**
Load Imbalance	Running	AC current phases do not match. (More Information)
Exception Fault*	All	When the controller encounters an unhandled exception or lockup (watchdog triggered) it will reset and enter the failure mode as an exception fault. *The name of this fault is configurable form the Configuration Software.

© 2017 DynaGen Technologies Inc

5.4.1 Group Outputs

Group functions have been designed to allow multiple output functions to be bundled together and assigned to a single switched output pin. The definition of a group output follows:

When any of the functions in a group is active (OR logic), the assigned switched output will be active.

Group Functions

Name	Active Mode	Description
Group #1	Group Dependent	Must be set from DYNAGEN Configurator software.
Group #2	Group Dependent	Must be set from DYNAGEN Configurator software.
Group #3	Group Dependent	Must be set from DYNAGEN Configurator software.
Group #4	Group Dependent	Must be set from DYNAGEN Configurator software.

Example: Low AC Frequency, High AC Frequency are bundled in 'Group #1' and assigned to Switched Output D. This output is connected to an external indicator lamp labeled 'AC Frequency Warnings', allowing one output to indicate there is a warning with the AC frequency. The following table shows the output state based on the warnings status.

Low AC Frequency Warning	High AC Frequency Warning	Switched Output State
Inactive	Inactive	OFF
Inactive	Active	ON
Active	Inactive	ON
Active	Active	ON

5.4.2 Pull and Hold Coil

On some engine systems the fuel pump has two coils. This is because the initial power on of the fuel solenoid requires substantial current (Pull Coil), but only needs a small amount of current to hold it in place (Hold Coil).

1. Hold Coil (Fuel) is energized.
2. Pull Coil is energized for the first 1.6 to 1.8 seconds of preheat. If preheat is disabled the pull coil is energized at the beginning of cranking; the crank output turned off for that time period.
3. This is repeated for each crank attempt.

Configuring a switched output to Pull Coil automatically configures the engine logic necessary for a Pull Coil system.

Note: The pull coil feature does not operate when the fuel output is activated by the Auto Power ECM feature or when requesting stored DTCs (DM2 codes). See the J1939 section for more information on these features.

Pull Coil Wiring Example

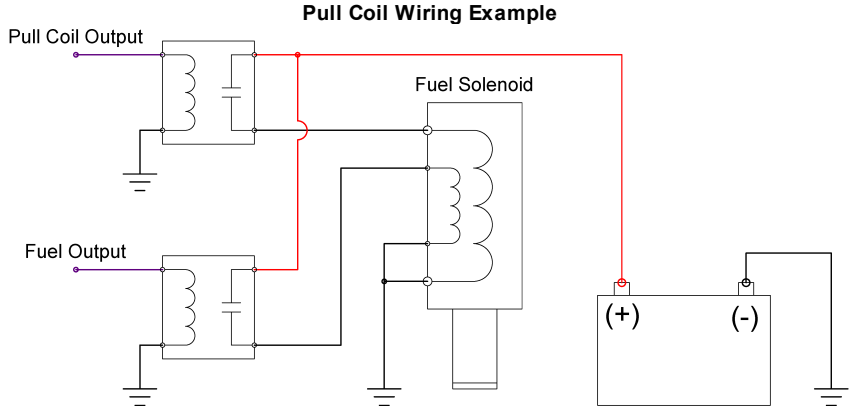

 © 2017 DynaGen Technologies Inc

5.5 Sensors

The controller has four sensor inputs which can be connected to a variety of different sensors/switches depending on the input. See the Terminal Descriptions section for more information regarding the sensor types supported.

To configure the behavior of these sensor inputs the user assigns the sensor input to one of the following 7 sensor functions:

- Engine Temperature,
- Oil Pressure,
- Fuel Level
- Auxiliary Sensor 1
- Auxiliary Sensor 2
- Auxiliary Sensor 3
- Auxiliary Sensor 4

Note that there are more sensor functions than sensor inputs as the Auxiliary Sensors can be assigned the same sensor input as the other sensor functions.

- The Engine Temperature, Oil Pressure, and Fuel Level functions are mostly fixed in functionality but the Auxiliary sensors can be configured to perform specific shutdowns or special functions (Example: Starting engine on low temperature).
- The Engine Temperature, Oil Pressure, and Fuel Level functions can be set to work with a switch or a sender/sensor but the Auxiliary sensors can only work with a sender.

Note: The engine speed and battery level are built in and do not need to be assigned to a pin.

5.5.1 Engine Temperature

Use the following settings' configurations to allow the controller to read and interpret data from the engine temperature sensor or switch.

(Sensors > Engine Temp. menu)

Name	Range	Description
Signal Source	Port A Port B Port C Port D J1939 Bus*	The sensor input pin where the engine temperature switch or sender is attached. *Engine temperature is obtained from the engine controller (ECM) using the CANbus communication port and J1939 protocol.
Sensor Type	DAT DAH* VDO 250F* (custom sender)** Close = Warning+ Open = Warning+ Close = Failure+ Open = Failure+	Select the sender that is connected to the Signal Source above. If using a switch select the action that should occur when the switch is active. *These are preprogrammed into the controller and cannot be changed. - DAT DAH supports all Datcon type DAH (high range) temperature sensors such as 02022-00. - VDO 250F supports the VDO 323-420 or equivalent temperature sensor. DAT DAH and VDO 250F can only be used if the Signal Source is set to Port A, C, or D. To use on other ports store as a custom sender table using the RapidCore Configuration software. **A custom table can be created using the RapidCore Configuration Software. The text (custom sender) will be replaced with the custom text you choose when creating the sender. +The switch must close to ground.
Trim Offset	-50.0 ~ 50.0°F (-10 ~ 10°C)	Calibrate a sensor by using the offset to correct errors. Only applies if Sensor Type has been set to a sender.
Setpoints > Bypass Time	0 ~ 90 seconds	Amount of time to bypass warnings and failures after engine has started.

 © 2017 DynaGen Technologies Inc

Name	Range	Description
Setpoints > Low Warn (Low Warning)	Disabled, 32 ~ 200°F (0 ~ 93.3°C)	Reading at which a "Low Engine Temp" warning occurs. Displays 'Low Engine Temp' on the screen. Only applies if Sensor Type has been set to a sender. Monitored globally including OFF and AUTO.
Setpoints > High Warn (High Warning)	Disabled, 50 ~ 300°F (10 ~ 148.9°C)	Reading at which a "High Engine Temp" warning occurs. Only applies if Sensor Type has been set to a sender. Only monitored in the RUN mode.
Setpoints > High Fail (High Failure)	Disabled, 50 ~ 300°F (10 ~ 148.9°C)	Reading at which a "High Engine Temp" failure occurs. Only applies if Sensor Type has been set to a sender. Only monitored in the RUN mode.

Note: All temperature settings are entered in terms of Fahrenheit.

5.5.2 Oil Pressure

Use the following settings' configurations to allow the controller to read and interpret data from the oil pressure sensor or switch.

Name	Range	Description
Signal Source	Port A Port B Port C Port D J1939 Bus*	The sensor input pin where the oil pressure switch or sender is attached. *Oil pressure is obtained from the engine controller (ECM) using the CANbus communication port and J1939 protocol.
Sensor Type	DAT 100P/R240* VDO 150P/R180* (custom sender)** Close = Warning+ Open = Warning+ Close = Failure+ Open = Failure+	Select the sender that is connected to the Signal Source above. If using a switch select the action that should occur when the switch is active. *These are preprogrammed into the controller and cannot be changed. - DAT 100P/R240 supports the Stewart - Warner 279B-F and Datcon 2505-00 sender tables. - VDO 150P/R180 supports the VDO 360-004 oil pressure sender. DAT 100P/R240 and VDO 150P/R180 can not be used on port A. To use on port A store as a custom sender table using the RapidCore Configuration software. **A custom table created using the RapidCore Configuration Software. The text (custom sender) will be replaced with the custom text you choose when creating the sender. +The switch must close to ground.
Trim Offset	-50.0 ~ 50.0 PS (-344.7 ~ 344.7kPa)	Calibrate a sensor by using the offset to correct errors. Only applies if Sensor Type has been set to a sender.
Setpoints -> Bypass Time	0 ~ 90 seconds	Amount of time to bypass warnings and failures after engine has started.
Setpoints -> Low Warning	Disabled, 0.1 ~ 99.0 psi (0.7 ~ 682.6kPa)	Reading at which a "Low Oil Pressure" warning occurs. Only applies if Sensor Type has been set to a sender.
Setpoints -> Low Failure	Disabled, 0.1 ~ 99.0 psi (0.7 ~ 682.6kPa)	Reading at which a "Low Oil Pressure" failure occurs. Only applies if Sensor Type has been set to a sender.

Note: All pressure settings are entered in terms of psi.

 © 2017 DynaGen Technologies Inc

5.5.3 Fuel Level

Use the following settings' configurations to allow the controller to read and interpret data from the fuel level sensor.

Name	Range	Description
Signal Source	Port A Port B Port C Port D	The sensor input pin where the fuel level switch or sender is attached.
Sensor Type	DAT R/33-240* VDO R/0-180* (custom sender)** Close = Warning+ Open = Warning+ Close = Failure+ Open = Failure+	Select the sender that is connected to the Signal Source above. If using a switch select the action that should occur when the switch is active. *These are preprogrammed into the controller and cannot be changed. - DAT R33-240 supports a Dacon fuel level sensor of the range 33 Ohms to 180 Ohms - VDO R/0-180 supports a VDO fuel level sensor of the range 0 Ohms to 180 Ohms DAT R33-240 and VDO R/0-180 can not be used on port A. To use on port A store as a custom sender table using the RapidCore Configuration software. **A custom table created using the RapidCore Configuration Software. The text (custom sender) will be replaced with the custom text you choose when creating the sender. +The switch must close to ground.
Trim Offset	-50.0 ~ 50.0%	Calibrate a sensor by using the offset to correct errors. Only applies if Sensor Type has been set to a sender.
Setpoints -> Bypass Time	0 ~ 90 seconds	Amount of time to bypass warnings and failures after engine has started.
Setpoints > Low Warning	Disabled, 1 ~ 90%	Reading at which a "Low Fuel Level" warning occurs. Only applies if Sensor Type has been set to a sender. Only monitored in the RUN mode.
Setpoints > Low Failure	Disabled, 1 ~ 90%	Reading at which a "Low Fuel Level" failure occurs. Only applies if Sensor Type has been set to a sender. Only monitored in the RUN mode.
Setpoints > High Warning	Disabled, 1 ~ 125%	Reading at which a "High Fuel Level" warning occurs. Displays 'High Fuel Level' on the screen. Only applies if Sensor Type has been set to a sender. Monitored globally including OFF and AUTO.

5.5.4 Engine Speed

Use the following settings' configurations to allow the controller to read and interpret speed sensing data.

Name	Range	Description
Signal Source	J1939 Bus Mag Pickup Genset Voltage	The source for the engine speed signal.
Speed Settings > Rated RPM	500 ~ 4000 RPM in 1 RPM increments	Speed at which the engine runs under normal operating conditions. Warning and failure setpoints are calculated from this setting.
Speed Settings > Idle RPM	300 ~ 2000 RPM in 1 RPM increments	Speed at which the engine runs when it is idling.
Speed Settings > Tooth Count	1 ~ 600	(Mag Pickup only) Number of teeth on the flywheel.

 © 2017 DynaGen Technologies Inc

Name	Range	Description
		If the number of teeth is unknown the following formula can be used. A multimeter must be used to measure the AC frequency (Frequency-In-Hz below) from the magnetic pickup. The speed (Speed-In-Rpm below) must be known. Tooth-Count = (Frequency-In-Hz * 60) / Speed-In-Rpm
Setpoints > Low Warn (UnderSpeed Warning)	20 ~ 99%	Reading at which a warning occurs.
Setpoints > Low Fail (UnderSpeed Failure)	20 ~ 99%	Reading at which a failure occurs.
Setpoints > High Warn (OverSpeed Warning)	101 ~ 150%	Reading at which a warning occurs.
Setpoints > High Fail (OverSpeed Failure)	101 ~ 150%	Reading at which a failure occurs. A over speed failure is triggered if the speed is below this threshold for 4 seconds.
RPM Control > Min Speed	Submenu	Front Panel Speed Control SettingsSee Front Panel Speed Control section for more information on these settings.
RPM Control > Max Speed		
RPM Control > Speed Bias		
RPM Control > Tsc1 RPM/s		
RPM Display	Blank AC Hertz Aux Sensor 1 Aux Sensor 2	
RPM Switch > Secondary (Secondary RPM / 50Hz)	500 ~ 4000	The Rated RPM when the Secondary RPM / 50Hz is selected. See RPM / Frequency Select section for more information.
RPM Switch > Primary (Primary RPM / 60Hz)	500 ~ 4000	The Rated RPM when the Primary RPM / 60Hz is selected. See RPM / Frequency Select section for more information.

NOTE: When using J1939 or Genset Voltage as a signal source, connections to the speed sensing terminals are not required.
IMPORTANT: When using Genset Voltage as a signal source the voltage source must be connected to terminal A (J7-1). AC frequency is sensed on terminal A only.

NOTE: Speed is monitored at the start of cranking. If there is speed detected above the crank disconnect setting then cranking and idle is skipped.
The speed is not monitored during delay-to-start or preheat as this provides some degree of protection against spurious signals due to noise. The fuel input is turned on at the start of preheat and often powers external equipment that can cause noise.

© 2017 DynaGen Technologies Inc

5.5.4.1 Front Panel Speed Control

The operator is able to adjust the speed of the engine by using the controller's front panel. This section describes the two methods available for implementing speed control, the settings and parameters to be used, as well as the necessary instructions allowing the operator to control the speed.

Speed Control Methods

Setting	Description
Front Panel Speed Control using J1939 TSC1	The controller can instruct the ECM of an electronic engine to adjust its speed by broadcasting the TSC1 command. Refer to the J1939 Manual for more information.
Front Panel Speed Control using Switched Outputs	The controller can instruct the ECM of an electronic engine to adjust its speed by using switched outputs on the controller set to RPM Increment and RPM Decrement to interface with digital inputs on the ECM. When the speed is changed, the corresponding switched output will be on for 1 second each time increment or decrement is pressed. See the rest of this section for more information.
Aux 4 Speed Control	The Auxiliary sensor 4 is used to determine the setpoint speed. The speed is adjusted with the TSC1 J1939 command. Refer to the J1939 Manual for more information.



WARNING: Switched outputs have a floating voltage of approximately 8V when off. If using the outputs for digital logic, it will be necessary to put a pull-down resistor (1kOhm, 1 Watt) from the output to ground to ensure a low logic level when output is off.

Front panel speed control using the Switched Outputs

Settings

Name	Parent Menu	Range	Description
Speed Control Enable	Configuration Software only. Engine Speed menu.	Enable ~ Disable	Enables or disables front panel speed control.
RPM Display	Sensors > Engine Speed	Nothing / Blank AC Frequency Auxiliary Sensor 1 Auxiliary Sensor 2	Parameter to display when adjusting speed from front panel. This is used to provide operator feedback in the case that the engine RPM affects another parameter such as AC Frequency or an Auxiliary Sensor (Example: Flow rate of pump).
Limit Method	Configuration Software only. Engine Speed menu.	Speed Bias Min RPM / Max RPM	The method in which the minimum and maximum speeds the operator is allowed to adjust is determined.
Speed Bias	Sensors > Engine Speed > RPM Control	0 ~ 600 RPM in 1 RPM increments	The minimum or maximum RPM that the engine speed can be adjusted around the Rated RPM. Example: Rated RPM is 1800 and Speed Bias is 150. The minimum RPM will be 1650 and maximum RPM will be 1950. Only valid when the correct limit method is chosen.
Min Speed		500 ~ 4000 RPM in 1 RPM increments	The minimum RPM that can be set using speed control. Only valid when the correct Limit Method is chosen.
Max Speed		500 ~ 4000 RPM in 1 RPM increments	The maximum RPM that can be set using speed control. Only valid when the correct Limit Method is chosen.
Tsc1 RPM/s	Sensors > Engine Speed > RPM Control	Disable, 10 ~ 300 RPM/s in 10 RPM/s increments	Ignore this setting. Refer to the J1939 reference manual for information on this setting.

 © 2017 DynaGen Technologies Inc

Speed Control Instructions
When the controller is running and there are other functions occurring, the controller will scroll through its display parameters as usual. When the speed control page is displayed, it will show the Engine Speed as well as the following instructions: Hold AUTO + Up/Down to Adjust RPM.

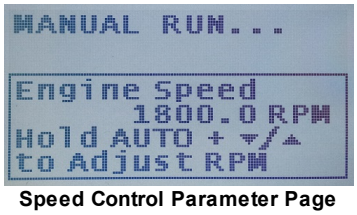

Speed Control Parameter Page

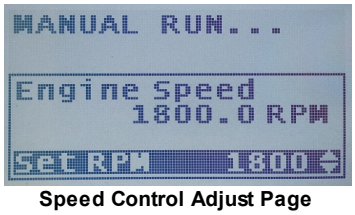

Speed Control Adjust Page

Pressing and holding the AUTO button will display the screen to the right. If a 'Display Adjust Parameter' is set, it will also be displayed underneath the Engine Speed. While still holding the AUTO key, press the up or down arrows to adjust the RPM. The Engine Speed display should update as the engine physically changes its speed to accommodate the speed request.

NOTE: When using switched outputs for speed control, the Set RPM will display '---' instead of the set speed.

5.5.5 Battery Level

Use the following settings' configurations to allow the controller to read and interpret the battery voltage level.

Name	Range	Description
Battery Recharge	Enable ~ Disable	Enables or disables the ability to have the engine start on low battery voltage in order to charge it.
Recharge Setup -> Level	6.0 - 30.0V	Voltage level at which the controller starts the engine to recharge the battery.
Recharge Setup -> Pre-Alarm	1 ~ 30 minutes	Amount of time to display a warning before starting the engine.
Recharge Setup -> Duration	10 ~ 900 minutes	Amount of time to run the engine.
Setpoints -> Low Warning	6.0 ~ 24.0V	Reading at which a warning occurs.
Setpoints -> Low Failure	6.0 ~ 24.0V	Reading at which a failure occurs.
Setpoints -> High Warning	12.0 ~ 32.0V	Reading at which a warning occurs.
Setpoints -> High Failure	12.0 ~ 32.0V	Reading at which a failure occurs.
Crank Low Batt	6.0 ~ 24.0V	Screen displays a 'Low Voltage During Cranking' warning if voltage dips below this level during cranking.

NOTE: When the engine is running, the battery voltage will equal the alternator charging voltage. The actual open-circuit battery voltage may be lower than displayed.

Battery Recharge Sequence

 © 2017 DynaGen Technologies Inc

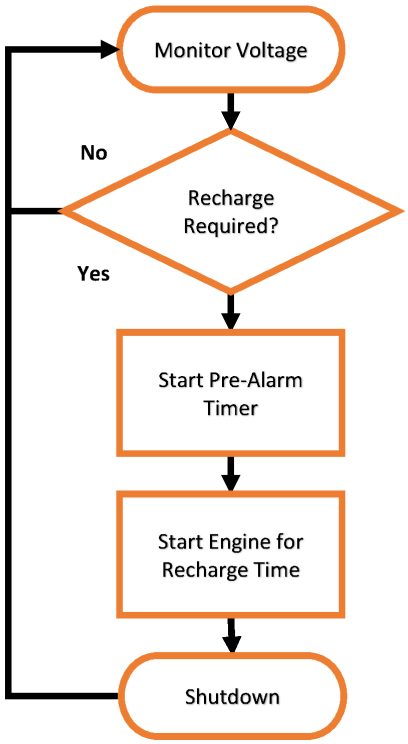

© 2017 DynaGen Technologies Inc

5.5.6 Auxiliary Sensors

The Auxiliary sensors are used for supporting custom sensors and triggering actions based on the sensor values.



You must use the RapidCore Configuration Software to program a custom sender table to the controller for the auxiliary sensor(s) that will be used. Otherwise "Undefined Sensor" will appear menu in the front panel menu system. Once a sender table is programmed to the controller all the other settings can be adjusted from the front panel of the controller.

(Sensors > Aux Sensor 1/2/3/4 menus)

Name	Range	Description
Signal Source	Disable Port A Port B Port C Port D	The source where to get the signal for the aux. sensor. Any port can be used even if it is used by another sensor or aux. sensor. If the port is in use by other sensor this is known as *overloading* the port.
Custom Sender (Configuration Software only)	---	The sender resistance / value curve must be programmed from the RapidCore Configuration Software even if the port is being overloaded. This tells the controller how to interpret the signal from the port. No front panel configuration is allowed until the sender curve is programmed to the controller.
Display	Enable Disable	Determines if the sensor's value is displayed on the screen when the engine is running.
Active Mode	Disable Global OFF Mode (Not in Auto) Auto Mode Running Cranking After Cranking Cooldown	Determines under which operating conditions the Auxiliary Sensor is monitored. Multiple selections are allowed. Does not apply to "Start on Low" or "Start on High"; for those selections the active mode is always AUTO. Refer to the examples in the following pages for information on specific mode functions. Disable - Input cannot be triggered. Global - Input can be triggered at any time. OFF Mode - Input can be triggered while in the OFF mode. Auto Mode - Input can be triggered while in the AUTO mode. Running - Input can be triggered after a start command is received until shut down (cooldown not included). Cranking - Input can be triggered during cranking. After Cranking - Input can be triggered after engine has started until shut down. Cooldown - Input can be triggered while cooldown timer is active.
Func. Select	Fault Monitor Output on Low Output on High Start on Low Start on High	Determines how the controller responds to the readings of the auxiliary sensor. "x on Low" will turn on the output or start the controller if the sensor input falls below the Start Level. "x on High" will turn on the output or start the controller if the sensor input rises above the Start Level.
Trim Offset	-50.0 ~ 50.0 units. The units depends on the unit type of the programmed sender table -- ^{0}F, psi, %, V, A.	Calibrate a sensor by using the offset to correct errors.
Mode Settings > Bypass Time	0 ~ 90, 1 second increments	The amount of time to ignore the sensor input after the desired active mode is first entered. Once triggered the bypass time does not apply again until the device resets (for example transitioning from RUN to the OFF or AUTO state) or on power-up.
Mode Settings > Run Time	Disable 1 ~ 6000[1], 1 minute increments	(Only applies if Func. Select is **not** set to Fault Monitor) The amount of time to turn on the auxiliary switched output or run the controller before turning off the output or shutting down the controller.

 © 2017 DynaGen Technologies Inc

Name	Range	Description
		If the Run Time is disabled then the start/output is held until the Stop Level is reached (if enabled) or until the controller is reset or powered down or, in the case of Start on Low / Start on High, until the user presses the OFF button. Note that the run time is not exact. Up to 10 seconds may be added to the beginning of the run time counter and up to 4 seconds to the end. The run time begins when a start request is received so crank time, preheat time, etc is included in the Run Time.
Mode Settings > Start Level	Disable Temperature: 32 ~ 999, 1 ^{0}F increments Pressure: 1 ~ 6000, 1 psi increments Level: 1 ~ 99, 1 % increments Voltage: 0.1 ~99.9, 0.1 V increments Current: 1 ~ 999, 1 A increments	(Only applies if Func. Select is **not** set to Fault Monitor) The level at which the auxiliary switched output turns on or the engine starts. If this is set to Disable, the Aux sensor action defined in Func. Select is disabled. The Auxiliary sensor becomes display only (unless Func. Select is set to Fault Monitor).
Mode Settings > Stop Level		(Only applies if "Func. Select" is **not** set to Fault Monitor) The level at which the auxiliary switched input turns off or the engine is stopped. If Stop Level is disabled the start/output condition is maintained until the Run Time expires (if enabled) or until the controller is reset or powered down or in the case of a start until the user presses the OFF button.
Setpoints > Low Warning		(Only applies if "Func. Select" is set to Fault Monitor) Reading at which a warning occurs.
Setpoints > Low Failure		(Only applies if "Func. Select" is set to Fault Monitor) Reading at which a failure occurs.
Setpoints > High Warning		(Only applies if "Func. Select" is set to Fault Monitor.) Reading at which a warning occurs.
Setpoints > High Failure		(Only applies if "Func. Select" is set to Fault Monitor.) Reading at which a failure occurs.

[1] 1 ~ 600 minutes for firmware versions below 1.78.

If using *Output on Low* or *Output on High* one of the switched outputs events must be set to one of the following corresponding to the Aux. Sensor being configured per the table below.

(Switched I/O > Switched Out A/B/C/D/EF > Events menus)

Name	Description
Aux Sensor 1	Used by the Aux. Sensor 1 *Output On Low* or *Output on High* feature.
Aux Sensor 2	Used by the Aux. Sensor 2 *Output On Low* or *Output on High* feature.
Aux Sensor 3	Used by the Aux. Sensor 3 *Output On Low* or *Output on High* feature.
Aux Sensor 4	Used by the Aux. Sensor 4 *Output On Low* or *Output on High* feature.

The display resolution of the auxiliary sensors that are displayed on the screen are different than the resolution used for the purpose of the comparisons that determine if the start level, stop level, low warning, etc are in effect. The resolutions are given below.

Sensor Unit Type	Comparison Resolution
Temperature	1 ^{0}F
Pressure	1 psi
Level	1 %

 © 2017 DynaGen Technologies Inc

Sensor Unit Type	Comparison Resolution
Voltage	0.1 V
Current	1 A

Example: if the auxiliary sensor 1 (aux 1) is using a temperature sender curve, set to Output on Low, and the Start Level is set to 130 ^{0}F then the Output will not turn on until the temperature drops to 129 ^{0}F since the resolution for comparisons is 1 ^{0}F.

The below tables gives all the possible actions that the auxiliary sensors can perform.

	Behavior	Func. Select	Start Level	Run Time	Stop Level
A - Indefinitely	Start controller when the sensor drops below a certain value. Run indefinitely.[1]	Start on Low	Set to value that the sensor needs to drop below to start.	Disable	Disable
	Turn on an output when the sensor drops below a certain value. Keep on the output indefinitely.[2]	Output on Low	Set to value that the sensor needs to drop below to turn on the output.	Disable	Disable
	Start controller when the sensor rises above a certain value. Run indefinitely.[1]	Start on High	Set to value that the sensor needs to rise above to start.	Disable	Disable
	Turn on an output when the sensor rises above a certain value. Keep the output on indefinitely.[2]	Output on High	Set to value that the sensor needs to rise above to turn on the output.	Disable	Disable
B - Fixed Duration	Start controller when the sensor drops below a certain value. Run for a fixed period of time and then stop controller.	Start on Low	Set to value that the sensor needs to drop below to start.	Set to the desired run duration.	Disable
	Turn on an output when the sensor drops below a certain value. Run for a fixed period of time and then turn off the output.	Output on Low	Set to value that the sensor needs to drop below to turn on the output.	Set to the desired duration to keep the output on.	Disable
	Start controller when the sensor rises above a certain value. Run for a fixed period of time and then stop controller.	Start on High	Set to value that the sensor needs to rise above to start.	Set to the desired run duration.	Disable
	Turn on an output when the sensor rises above a certain value. Run for a fixed period of time and then turn off the output.	Output on High	Set to value that the sensor needs to rise above to turn on the output.	Set to the desired duration to keep the output on.	Disable
C - Start Level / Stop Level	Start controller when the sensor drops below a certain value. Stop controller when the sensor rises above a certain value.	Start on Low	Set to value that the sensor needs to drop below to start.	Disable	Set to the value the sensor needs to rise above to stop the controller.
	Turn on an output when the sensor drops below a certain value. Turn off output when the sensor rises above a certain value.	Output on Low	Set to value that the sensor needs to drop below to turn on the output.	Disable	Set to the value the sensor needs to rise above to turn off the output.
	Start controller when the sensor rises above a certain value. Stop controller when the sensor drops below a certain value.	Start on High	Set to value that the sensor needs to rise above to start.	Disable	Set to the value the sensor needs to drop below to stop the controller.
	Turn on an output when the sensor rises above a certain value. Turn off output when the sensor drops below a certain value.	Output on High	Set to value that the sensor needs to rise above to turn on the output.	Disable	Set to the value the sensor needs to drop below to turn off the output.

 © 2017 DynaGen Technologies Inc

D - Start Level / Stop Level with timeout	Start controller when the sensor drops below a certain value. Stop controller when the sensor rises above a certain value. Stop the controller after a fixed time if the stop level is not reached.	Start on Low	Set to value that the sensor needs to drop below to start.	Set to the desired maximum run duration (i.e. this is the timeout).	Set to the value the sensor needs to rise above to stop the controller.
	Turn on an output when the sensor drops below a certain value. Turn off output when the sensor rises above a certain value. Turn off the output after a fixed time if the stop level is not reached.	Output on Low	Set to value that the sensor needs to drop below to turn on the output.	Set to the desired maximum duration to keep the output on (i.e. this is the timeout).	Set to the value the sensor needs to rise above to turn off the output.
	Start controller when the sensor rises above a certain value. Stop controller when the sensor drops below a certain value. Stop the controller after a fixed time if the stop level is not reached.	Start on High	Set to value that the sensor needs to rise above to start.	Set to the desired maximum run duration (i.e. this is the timeout).	Set to the value the sensor needs to drop below to stop the controller.
	Turn on an output when the sensor rises above a certain value. Turn off output when the sensor drops below a certain value. Turn off the output after a fixed time if the stop level is not reached.	Output on High	Set to value that the sensor needs to rise above to turn on the output.	Set to the desired maximum duration to keep the output on (i.e. this is the timeout).	Set to the value the sensor needs to drop below to turn off the output.
E - Warnings/ Failures	Trigger warnings and/or failures on the sensor.	Fault Monitor	N/A	N/A	N/A
F - Display only	Do not perform any actions on the sensor value. Just display the value to the user.	Fault Monitor (Disable all warnings and failures)	N/A	N/A	N/A

 © 2017 DynaGen Technologies Inc

[1] The user must manually stop the controller by pressing the run button.
[2] The controller must be powered down or a reset initiated by changing a setting in the menu and existing a menu or going from the RUN mode to the AUTO or OFF mode.

5.5.6.1 Fault Monitor Example

In this example, a sensor is monitoring the temperature of an engine block. If the temperature rises above 275°F, a warning message is displayed. If the temperature rises above 350°F, the engine shuts down and a failure message is displayed.

Relevant Settings

Setting	Value
Signal Source	Same as Engine Temperature
Display	Disable (If enabled, controller will display Engine Temperature twice)
Sensor Type	Same as Engine Temperature
Sensor Table Name	Engine Temp.
Active Range	Running
Mode Select	Fault Monitor
Setpoints -> Low Warning	Disabled
Setpoints -> Low Failure	Disabled
Setpoints -> High Warning	275°F
Setpoints -> High Failure	350°F

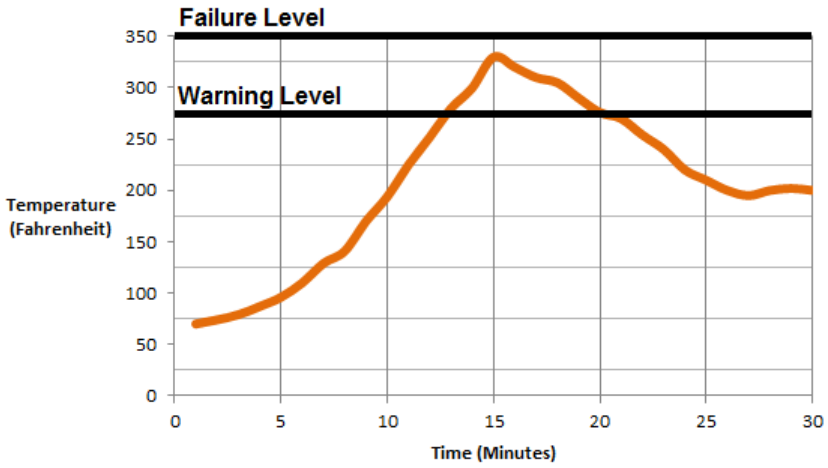

The chart above shows the connection between engine temperature and time. At approximately 13 minutes run time, the temperature rises above the 275°F warning threshold, activating the warning display. The engine will continue to run because it has not reached the 350°F failure threshold. At 20 minutes run time, the temperatures falls below the warning threshold and the warning disappears.

 © 2017 DynaGen Technologies Inc

5.5.6.2 Start on Low Example

In this example, a sensor is monitoring the voltage of an external battery bank. If the voltage falls below 10.5V, the engine will start and run for 40 minutes to charge the battery.

Relevant Settings

Setting	Value
Signal Source	Sensor Port X
Display	Enable
Sensor Type	Custom
Sensor Table Name	Battery Bank
Active Range	N/A (These ranges are fixed for Start on Low / High)
Mode Select	Start on Low
Mode Settings -> Active Time	40 minutes
Mode Settings -> Start Level	10.5V
Mode Settings -> Stop Level[1]	Disabled

[1] Stop Level needs to be disabled when the engine is running because the battery voltage will equal the alternator charging voltage. Having this disabled will force the engine to run for the entire duration of the active time.

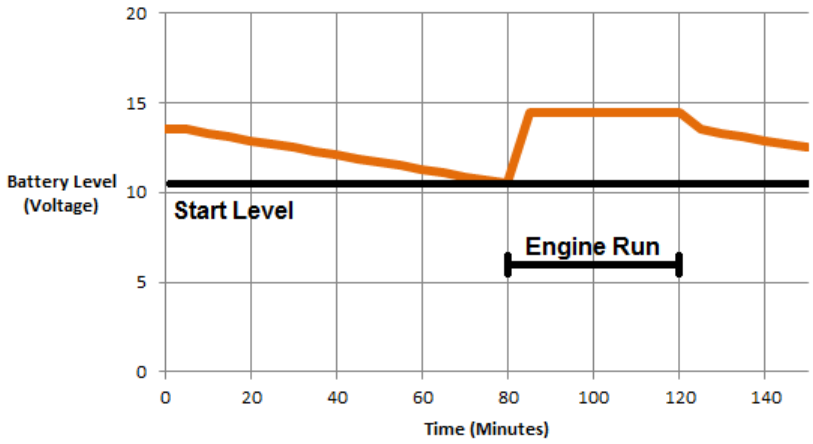

The chart above shows the connection between a battery bank and time. At approximately 80 minutes time, the voltage falls below the 10.5V start threshold causing the engine to start. The engine runs for the 40 minutes active time regardless of the voltage reading and then shuts down.

© 2017 DynaGen Technologies Inc

5.5.6.3 Output on High Example

In this example, a sensor is monitoring the temperature of an engine. If the temperature rises above 325°F, a fan will turn on to cool the engine. Once the temperature drops to below 200°F the fan will turn off.

Relevant Settings (Auxiliary Sensor)

Setting	Value
Signal Source	Same as Engine Temperature
Display	Disable (If enabled, controller will display Engine Temperature twice)
Sensor Type	Same as Engine Temperature
Sender Table Name	Engine Temp.
Active Range	Global
Mode Select	Output on High
Mode Settings -> Active Time[1]	Disabled
Mode Settings -> Start Level	325°F
Mode Settings -> Stop Level	200°F

[1] Active time is disabled because the fan needs to stay on indefinitely or until 200°F is reached.

Relevant Settings (Switched Outputs)

Setting	Value
Switched Output X	Auxiliary Sensor X (Choose based on which Auxiliary Sensor is being used)

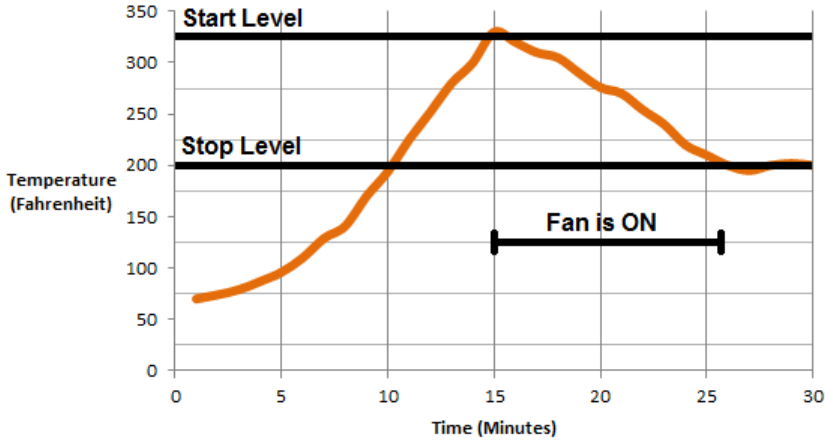

The chart above shows the connection between engine temperature and time. At approximately 10 minutes run time, the temperature rises above the 325°F start threshold and the fan turns on. The fan continues to run as the temperature declines. When the temperature falls below the 200°F stop threshold, the fan turns off.

© 2017 DynaGen Technologies Inc

5.5.6.4 Sensor as a Switch

Reserved for future use.

5.5.7 Custom Sensor Tables

Custom Sensor Tables are created using the RapidCore Configuration Software when using a sensor that is not supported by DYNAGEN. The configurator has the ability to create these custom tables, allowing the controller to properly read the sensor data.

NOTE: Custom sender tables can only be created when using the configuration software.

Parameter	Description
Name	The label that will be displayed in the controller (Engine Temp, Oil Pressure, etc.)
Input Type	Choose resistance, voltage or current based on the sensor type. Use the Terminal Descriptions section to determine if your sensor is compatible with a sensor port.
Unit Type	Choose temperature, pressure, voltage, current or percentage based on the sensor. This defines what unit of measurement will be displayed on the front panel (ºF, psi, V, A, %).

The following example outlines the steps for creating a custom sensor table:

1. Navigate to the sensor input that will be using your custom sensor table.
2. Select a Name, Input Type and Unit Type for the controller (Definitions in table above).
3. Click the check box next to 'Build Table' (Image Step 1).
4. From the 'Sender' drop down menu, select 'Custom' (Image Step 2).
5. Click the 'Edit' button next to the drop down menu (Image Step 3).
6. Enter the sensor values. Once entered, click Apply then OK.

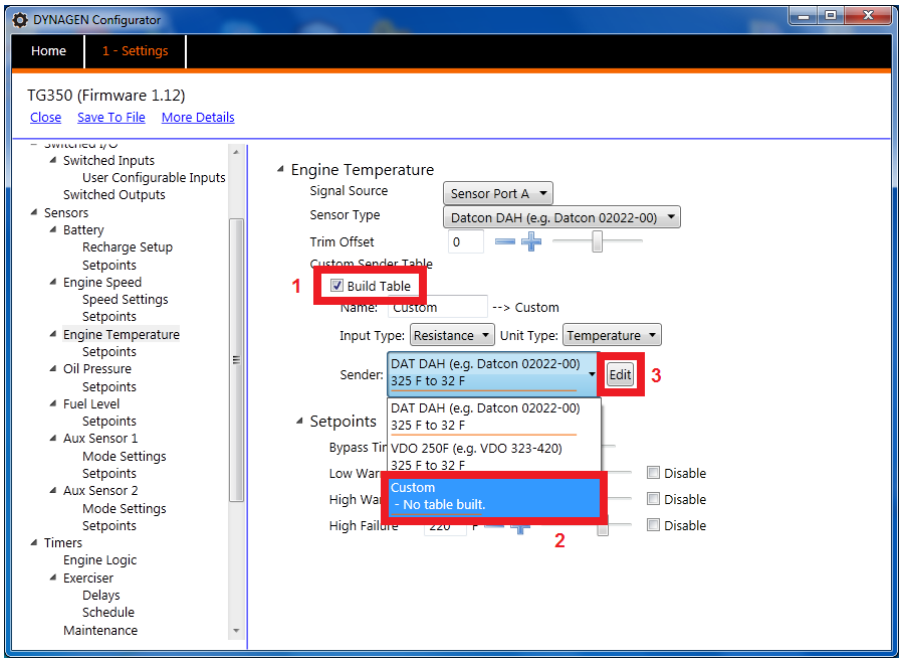

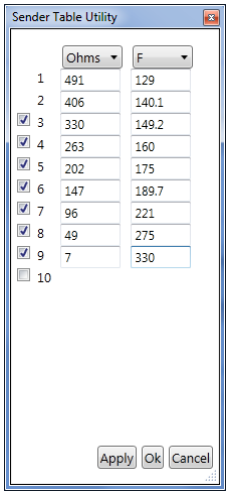

 © 2017 DynaGen Technologies Inc

5.6 Timers

The controller has an internal clock which is used not only to keep time, but to ensure programed events happen at the correct times. The following sections are used to configure settings associated with timing functions.

NOTE: The controller has an on-board backup battery to keep time even when main power is not supplied to the unit. This battery has an unpowered (no main power) lifetime of approximately five years.

5.6.1 Engine Logic

The following settings determine how the controller starts and stops the engine. It gives the user the functionality to add delays and timers to the sequences. Most of the settings have a switched output associated with them that must be set in the Switched Outputs settings.

NOTE: Setting a timer's value to 0 seconds will disable the timer. Example: If Delay to Start is set to 0 seconds, the controller will not perform a Delay to Start when starting the engine.

Timers > Engine Logic:

Name	Range	Description
Delay to Start	0 ~ 90 seconds	Amount of time to delay the starting of the engine after receiving a command to start.
DTS Manual Run (Delay to Start on Manual Run)	Enable ~ Disable	Determines if the the Delay to Start timer is used when the front panel RUN button is used to start the engine.
Preheat Mode	Preheat Timer Switched Input J1939	Determines the method used to control enabling the glowplug output. See the Preheat Mode section for more information.
Preheat Time	0 ~ 1200 seconds 0 ~ 90 in firmware versions below 1.33.	Amount of time the Glowplug output is active before cranking the engine. Used on diesel engines to warm the engine before cranking.
Crank Time	3 ~ 30 seconds	Amount of time the Crank output is active before going to crank rest. This timer immediately expires upon successful cranking.
Midheat Time	0 ~ 90 seconds	Keeps Glowplug output turned on while cranking but not during crank rest. Output will turn off upon crank failure, crank success or midheat time expiration.
Crank Rest Time	1 ~ 90 seconds	Amount of time to delay between each attempt to start the engine.
Crank Attempts	1 ~ 20	Number of attempts to start the engine before going to an overcrank failure.
Fuel In Rest (Fuel Crank Rest)	Fuel ON Fuel OFF	Determines if the fuel output stays on during the crank rest time.
RPM Disconnect	100 ~ 2000 rpm	Speed at which controller determines the engine has started successfully and turns off the Crank output.
Postheat Time	0 ~ 90 seconds	Amount of time the Glowplug output remains on after crank success and the engine is running.
False Restart (Restart on False Start)	Enable false start (engine stall) detection. Refer to the False Restart section.	
False Check (False Restart Detect Time)		
Warmup Time	0 ~ 600 s in 5 s increments	After successful cranking, engine delays this amount of time before turning on the Warmup output. This allows the engine to warm up before applying any load to it. The output will turn off when the controller enters the Cooldown Delay.
OFF Button Function	Cooldown Shutdown Force Cooldown	The function the OFF button on the front panel performs while engine is running. See the OFF Button Function section for more information.

 © 2017 DynaGen Technologies Inc

Name	Range	Description
Cooldown Time	0 ~ 600 s in 5 s increments	Amount of time to cool down the engine after a stop command has been received. During this time the Warmup output turns off and the Cooldown output turns on. If another start command is received during cool down, the controller will return to running mode.
ETS On Duration (Energize to Stop)	0 ~ 30 seconds	Amount of time the Energize to Stop output is on after the engine has shut down. If controller still detects speed (RPM) after this time expires, it goes to a 'Failed to Stop' failure. Time must be greater than 0 seconds for the Energize to Stop function to work.
Warm-up Idle	Idle during warm-up option. See the Idle section for more information.	
Idle Settings		
Cooldown Idle		
Auto Idle Link		

5.6.1.1 Preheat Mode

The controller has the ability to control the length of the preheat time through 3 different methods. The table below describes each method:

Preheat Mode Setting (Timers > Engine Logic menu)

Mode	Description
Preheat Timer	This mode uses the Preheat Time setting in the Engine Logic menu.
Switched Input	This mode uses a switched input set to 'ECM Preheat' to determine when to exit preheat. The preheat time (in Engine Logic) must be set to a minimum of 5 seconds for this input to work. If the switched input is or becomes active when the preheat timer is counting down the controller displays 'ECM Preheating' on the screen after the preheat counter has finished its countdown. Cranking begins when the 'ECM Preheat' switched input is no longer active.
J1939	This mode uses commands sent from the ECM over J1939 to decide when to exit preheat.

NOTE: During preheat the Glowplug switched output is on (it needs to be set to a switched output -- see Switched Outputs).

5.6.1.2 False Restart

The false restart feature is used to monitor and recover from unsuccessful crank attempts where the speed did go above the crank disconnect and the controller is in the RUN mode. For example the engine might have stalled shortly after cranking.

False Restart settings (under Timers > Engine Logic menu)

Name	Range	Description
False Restart (Restart on False Start)	Enable Disable	Determines if the controller will monitor for false starts and attempt a restart. Controller will only attempt restarting the engine as many times as determined by Crank Attempts.
False Check (False Restart Detect Time)	5 ~ 30 in 1 second intervals	Amount of time after successful cranking to monitor for a false restart. A false restart is defined as the speed dropping below 250 RPM for 2 seconds. If this time expires and the engines stalls out, the controller will not attempt a restart. This time starts from crank success.

Tip: It takes up to 2 seconds for the false restart to be triggered. In addition it takes time for the engine speed to drop below 250RPM. These should be measured and added to the desired False Check setting.

 © 2017 DynaGen Technologies Inc

For example when the speed is disconnected it takes approximately 2.5 s for the speed sensing to record 0 RPM when the speed sensing is set to a magnetic input at a speed of 3200Hz/1800RPM. This is 4.5 s including the 2 s for the false restart delay. So if the desired monitoring period is 10 s, the False Check setting should be set to 15 s.

5.6.1.3 OFF Button Function

The OFF button on the front panel of the controller can be configured to function in 3 different ways while the engine is running. The table below describes each of these functions:

Function	Description
Cooldown	This function causes the controller to go into cooldown. Pressing the OFF button again will cause the engine to shut down.
Shutdown	This function bypasses Cooldown and causes the engine to shut down.
Force Cooldown	This function causes the controller to activate the cooldown process. Pressing the OFF button will have no affect as the controller is forcing the engine to perform a full cool down.



WARNING: If the controller receives a command to start from the remote start or front panel run button while in Cooldown, it will leave the Cooldown mode and go back to Running mode.

 © 2017 DynaGen Technologies Inc

5.6.1.4 Idle

Controller ignores under speed, voltage and frequency warnings and failures when active. If using J1939, the controller will broadcast TSC1 as the Idle Speed parameter found in the Engine Speed section.

This section explains the general idle functionality.

There are three ways to use idle:
1. Idle Warmup -- Automatically enter the idle mode during warmup for a period of time before going to rated speed. See Warmup Idle.
2. Cool down Idle -- Idle automatically during cool down. See below.
3. Idle Switched Input -- Idle whenever this switched input is active. See the Idle Mode function under Switched Inputs.

Name	Parent Menu	Range	Description
Cooldown Idle	Timers > Engine Logic	Disable Enable	Idle during cooldown.
Auto Idle Link	Timers > Engine Logic	Disable, Breaker Trip	If set to breaker trip, the breaker trip will be activated whenever the controller is in the Idle mode. The breaker trip will be turned off when Idle mode is exited if it was not in the latched state. If the user delaches the breaker trip output while auto idle is active the breaker trip will turn off for one section and then turn back on.

5.6.1.4.1 Warmup Idle

This section explains the Warmup Idle functionality.

The warmup idle is used to run the engine at a reduced speed at engine start.

Name	Parent Menu	Range	Description
Warm-up Idle	Timers > Engine Logic	Disable Warm-up Timer Oil Temp. Engine Temp.	If enabled the engine is placed in Idle mode during the warm-up period. Warm-up Timer -- The engine idles during the duration of the warm-up timer countdown. Oil Temp. -- The oil temperature over J1939 is used to determine the extent of the warm-up / Idle period. Engine Temp. -- Same as Oil Temp. but the engine temperature is used. The engine temperature can come locally or from J1939. The oil temp and engine temp selections use the Debounce, Low Point, and High Point settings below.
Debounce	Timers > Engine Logic > Idle Settings	1 to 10s, 1s increments	(Warm-up Idle) If the temperature remains between the "Low Point" and "High Point" settings for this time exit the warm-up / idle.
Low Point	Timers > Engine Logic > Idle Settings	1 to 100^{0}F, 1^{0}F increments	(Warm-up Idle) Continue to idle when the temperature is below this setting. Ignore the Debouce.
High Point	Timers > Engine Logic > Idle Settings	1 to 100^{0}F, 1^{0}F increments	(Warm-up Idle) Always exit idle when the temperature is above this setting.
Cooldown Idle	Timers > Engine Logic	Disable Enable	Idle during cooldown.

 © 2017 DynaGen Technologies Inc

Name	Parent Menu	Range	Description
Auto Idle Link	Timers > Engine Logic	Disable, Breaker Trip	If set to breaker trip, the breaker trip will be activated whenever the controller is in the Idle mode. The breaker trip will be turned off when Idle mode is exited if it was not in the latched state. If the user delaches the breaker trip output while auto idle is active the breaker trip will turn off for one section and then turn back on.

5.6.1.4.2 Remote Start Inhibit In Idle

Use this feature to prevent start up when the Idle mode switch is active.

Settings (Other Config > Idle Inhibit, in the Configuration Software these are under the switched inputs when the idle input is enabled.)

Name	Range	Description
Remote Start (Start / Stop Switched Input Inhibit)	Enable Disable	Prevent the remote start switch input from starting the engine when the idle switch is active.
Aux Start (Aux 1,2,3,4 Sensor Autostart Inhibit)	Enable Disable	Prevent Auxiliary 1, 2, 3, and 4 sensors autostart feature from starting the engine when the idle switch is active.

If the engine is in the IDLE mode because of the Warmup Idle feature, the remote start (start/stop) and auxiliary sensors autostart can still start the engine.

This prevents starting when the Idle switch is active in the AUTO mode. This will also shutdown the engine if the idle switched input is activated when the controller is in the delay-to-start, preheat, cranking, and crank reset states. The main purpose is to prevent a remote start if the idle switch was accidentally left on.

5.6.2 Schedulers

Enter topic text here.

5.6.2.1 Exerciser

The Exerciser function is used to start and run the engine periodically. The following settings configure the Exerciser function.

Exerciser Settings (in Timers menu)

Name	Range	Description
Enable	Enable ~ Disable	Enables the exerciser feature.
Delays -> Pre-Alarm	1 ~ 20 minutes	Amount of time to display a warning before starting the engine.
Delays -> Run Time	10 ~ 1500 minutes	Amount of time to run the engine.
Schedule -> Start Date	1 ~ 31	The day of the month and the time for the first exerciser run. This setting is only used to set the first exerciser run. All subsequent exerciser runs use the Repeat Days setting to determine when they should run. If the date and hour selected is already in the past for the current month then the exerciser will be started on the next month with that date and hour. Also if the date is not yet in the past but the current month does not have that date (e.g. February 21 and a date of 31 is selected) the exerciser will run on the next month to have that date (e.g. 31rst of March) at the hour specified.
Schedule -> Start Hour	0 ~ 23	

 © 2017 DynaGen Technologies Inc

Name	Range	Description
Schedule -> Repeat Days	1 ~ 28 days	Number of days between each exerciser cycle. This setting is applied to all subsequent exerciser starts after the first start.

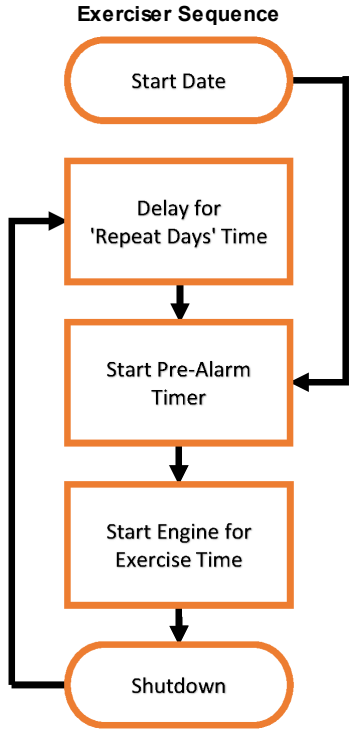

If the controller is in the OFF mode, if the emergency stop is activated, or if the start inhibit is active then the exerciser will not run. The event, "Bypass Exerciser", will be logged in the event log and the exerciser will run again at the next scheduled time as determined by the "Repeat Days" setting.

© 2017 DynaGen Technologies Inc

5.6.2.2 Weekly Scheduler

The weekly scheduler allows up to 16 unique weekly exercise times to be created.

Timers > Week Scheduler:

Name	Range	Description
Weekday	Sunday ~ Saturday	The day of the week the exercise will take place on.
Start time	24 hour clock in 1 minute increments	When the exercise should start on a give day. At the selected time a one minute prealarm is displayed on the LCD screen. The controller starts after this one minute period.
Run time	10 ~ 1440 min in 1 min increments	The duration of the exercise run period. Up to one day.

When entering the Week Scheduler menu there will be 16 sub menu items each corresponding to one of the 16 weekly exercise times. If disabled the entry will have dashed lines: "--- --:-- -----". If enabled the day of week, start time, and duration will be displayed for the menu. Press enter will enter the sub menu for that exerciser time.

It is recommended to use the RapidCore Configuration Software to enter the times as this provides a much more convenient interface especially if daily exercise times are wanted.

5.6.2.3 Long Time Run

The Long Time Run counter can be used to shutdown the controller after a very long period of time. This is useful for remote primary power applications where the user wants to divide run time between two generators. When the countdown expires the controller will shutdown. Long Time Run is only active if the generator was started manually (i.e. by pressing the front Run button).

Timers > Long Time Run:

Name	Range	Description
Start Trigger	Disable (Default) Manual Start	Set to "Manual Start" to enable the Long Time Run feature.
Run Duration	1 ~ 5000 hours in 1 hour increment (Default = 1000 hours)	The amount of time to run before shutting down.

5.6.3 Maintenance

The controller has the ability to count down the time between scheduled maintenance events. Once maintenance is required, the controller will alert the operator via the LCD screen and a switched output (if enabled) wired to a lamp / horn / buzzer. The following settings are used to configure the maintenance timer.

(Timers > Maintenance)

Name	Range	Description
Reset Counter	Enable ~ Disable	Once the maintenance count interval expires, use this setting to reset the time and turn off the switched output (if enabled).
Enable Counter	Enable ~ Disable	Enables or disables the maintenance function.
Count Interval	10 ~ 9990 hours	Determines the number of hours between required maintenance. A switched output can be configured to turn on once the count interval expires.

To determine the amount of time until the next scheduled maintenance, follow these menu steps:

Main Menu -> Device Info. -> Maintenance

Maintenance counter is disabled if '----' is displayed. A negative number indicates the amount of time since maintenance timer expired.

 © 2017 DynaGen Technologies Inc

NOTE: The maintenance timer displays "Service Required" when this time expires. This message is only displayed the next time the controller enters the RUN mode. If the timer expires when the controller is in the RUN mode the message is not displayed.

5.7 AC Monitor

The controller has the ability to monitor AC voltage from a generator. The following sections are used to configure settings associated with AC monitoring.

5.7.1 Generator Voltage

The following settings are used to configure the controller's response to voltage measurements.

(AC Monitor > Genset Voltage menu)

Name	Range	Description
Voltage Source	Disable 2-Wire Single 3-Wire Single 3-Wire 3-Phase 4-Wire 3-Phase 4-Wire Delta Auto Selection	The wiring configuration of the generator. Disable will disable AC voltage and AC frequency sensing and display. 2-Wire Single: One 120VAC L-N. Use phase A. 3-Wire Single: 120/240VAC systems. Use phases A and B. 3-Wire 3-Phase: Three phase delta without a ground. 4-Wire 3-Phase: Three phase Wye system. Center taped ground. 4-Wire Delta: Delta with a ground. The high leg is phase B. For example if A-N and C-N read 120VAC then B-N will read 208VAC. Selecting Auto Selection will use the Voltage Select switched inputs to determine the wiring configuration. This setting also enables the AC Frequency monitoring and display.
Scaling Factor	0.500 ~ 2.500	The gain to apply to the AC voltage that is read at the controller. See below for more information.
Nominal Volts	50 ~ 800 VAC*	Generator voltage output when operating under normal running conditions.
Auto Nominal > 1Ph 3-Wire (1-Phase 3-Wire)	50 ~ 800 VAC*	Nominal Volts when using the Voltage Select inputs.
Auto Nominal > 3-Phase (1)	50 ~ 800 VAC*	
Auto Nominal > 3-Phase (2)	50 ~ 800 VAC*	
Auto Nominal > 3-Phase (3)	50 ~ 800 VAC*	
Auto Scaling > 1Ph 3-Wire (1-Phase 3-Wire)	0.500 ~ 2.500	Scaling Factor when using the Voltage Select inputs.
Auto Scaling > 3-Phase (1)	0.500 ~ 2.500	
Auto Scaling > 3-Phase (2)	0.500 ~ 2.500	
Auto Scaling > 3-Phase (3)	0.500 ~ 2.500	
Auto Single	A-C Phase A-B Phase	For 1-Phase 3-Wire when using the Voltage Select inputs. This determines which phases the single phase voltage is read from.
Setpoints > Low Warn	50 ~ 99%	Reading at which a warning occurs.
Setpoints > Low Fail	50 ~ 99%	Reading at which a failure occurs.
Setpoints > High Warn	101 ~ 150%	Reading at which a warning occurs.
Setpoints > High Fail	101 ~ 150%	Reading at which a failure occurs.



***NOTE**: 800 VAC applies to software logic only. Do not exceed 600 VAC on the AC Voltage terminals including during over voltage warning and failure conditions.

 © 2017 DynaGen Technologies Inc

Application Note: Scaling Factor
The scaling factor setting can be used to calibrate the AC voltage if there are discrepancies between the reading and the actual value. It can also be used if transformers are used to step up / down the voltage. The scaling factor applies to all phases in a system.

Example: The voltage source is a 3-Wire 3-Phase system with a nominal voltage of 208 VAC. The controller is reading 206.3 VAC but a calibrated multimeter gives 208.3 VAC. Use the formula below to determine the scaling factor.

1. Scaling Factor = Multimeter Reading / Controller Reading
2. Scaling Factor = 208.4 VAC / 206.3 VAC
3. Scaling Factor = 1.010

 © 2017 DynaGen Technologies Inc

5.7.1.1 AC Voltage Select

The controller has the ability to automatically change its AC sensing (voltage and current) and display configuration through the use of switched inputs. When using voltage select, the controller will continue to monitor the inputs for 10 seconds after crank success. Once that time expires, the controller will then display the selected voltage configuration.

The following must be set:

1. Two switched inputs (Switched I/O > Switched IN X > Function) must be set to the *Volt Select 1* and *Volt Select 2* switch input functions.
2. AC Monitor > Genset Voltage > Voltage Source must be set to *Auto Selection*. Rapid Configuration Software note: this option will not appear unless step one if performed.

The table below shows the relation between the switched inputs status and the voltage configuration.

Volt Select 1 Input	Volt Select 2 Input	Voltage Configuration
Inactive	Inactive	3-Wire Single Phase
Active	Inactive	3-Phase (1)
Inactive	Active	3-Phase (2)
Active	Active	3-Phase (3)

NOTE: Both *Volt Select 1* and *Volt Select 2* must be assigned to switched inputs. Otherwise the voltage sensing will be disabled.

The below settings must be set. All except "Auto Single" are menus that contain four settings corresponding to the Volt Select 1 / Volt Select 2 inputs above.

Name	Volt Select 2 Input
Genset Voltage > Auto Nominal	These settings corresponds to the "Nominal Volts" setting under the AC Monitor > Genset Voltage menu.
Genset Voltage > Auto Scaling	These settings corresponds to the "Scaling Factor" setting under the AC Monitor > Genset Voltage menu.
Genset Voltage > Auto Single	Only applies when voltage sourc is set to 1-Phase 3-Wire. This determines which phases the single phase voltage is read from: A-C or A-B.
Genset Current > Auto Rated	These settings corresponds to the "Rated Amps" setting under the AC Monitor > Genset Current menu.
Genset Current > Auto Scaling	These settings corresponds to the "Scaling Factor" setting under the AC Monitor > Genset Current menu.

5.7.2 Generator Frequency

Generator AC frequency display on the controller is enabled when the Voltage Source is not set to Disable.

The following settings are used to configure the controller's responses to frequency measurements.

Frequency Settings (in AC Monitor > Genset Freq.)

Name	Range	Description
Freq. Source	50Hz System (50Hz) 60Hz System (60Hz) Auto Selection	This is the wiring configuration of the generator. Selecting Auto Selection will use the Frequency Select input to determine which frequency is used. This setting is used by the below setpoints. It does not affect the display of AC Frequency.
Setpoints > Low Warn (Under-Frequency Warning)	Disable, 20 ~ 99%	Reading at which a warning occurs.
Setpoints > Low Fail (Under-Frequency Failure)	Disable, 20 ~ 99%	Reading at which a failure occurs.

 © 2017 DynaGen Technologies Inc

Name	Range	Description
Setpoints > High Warn (Over-Frequency Warning)	Disable, 101 ~ 150%	Reading at which a warning occurs.
Setpoints > High Fail (Over-Frequency Failure)	Disable, 101 ~ 150%	Reading at which a failure occurs.

5.7.2.1 RPM / Frequency Select

The controller has the ability to change between Primary RPM / 60Hz and Secondary RPM / 50Hz through the use of a switched input.

The following settings must be set in order for this feature to function:

- Switched I/O > Switched In A/B/C/D/E > Function > RPM Switch (Primary RPM / 60Hz - Secondary RPM / 50Hz Select). The switched input is only monitored before a start signal has been received. Once a start signal has been received changing the status of the switched input will have no effect.
- AC Monitor > Genset Freq. > Freq. Source > Auto Selection
- Sensors > Engine Speed > RPM Switch > Primary (Primary RPM / 60Hz)
- Sensors > Engine Speed > RPM Switch > Secondary (Secondary RPM / 50Hz)

The table below shows the correspondence between the switched input status and the RPM / Frequency.

Switched Input	Speed / Frequency
Inactive	Primary RPM / 60Hz
Active	Secondary RPM / 50Hz

NOTE: If enabled, the J1939 TSC1 PGN will be broadcasted according to the selected speed. Otherwise only the warning and failure setpoints are affected by this function.

 © 2017 DynaGen Technologies Inc

5.7.3 Generator Current

The following settings are used to configure the controller response to current measurements.

AC Monitor > Genset Current:

Name	Range	Description
Current Source	Enable ~ Disable	Enables or disables current metering.
Turns Ratio	5 ~ 5000A : 5A	The turns ratio of the current transformers.
Scaling Factor	0.500 ~ 1.250	Scaling factor at which the voltage is read into the controller. See below for more information.
Rated Amps	5 ~ 5000A	Maximum current draw the generator can provide when operating under normal running conditions.
Auto Rated > 1Ph 3-Wire	5 ~ 5000A : 5A	Rated Amps when using the Voltage Select inputs.
Auto Rated > 3-Phase (1)	5 ~ 5000A : 5A	
Auto Rated > 3-Phase (2)	5 ~ 5000A : 5A	
Auto Rated > 3-Phase (3)	5 ~ 5000A : 5A	
Auto Scaling > 1Ph 3-Wire	0.500 ~ 2.250	Scaling Factor when using the Voltage Select inputs.
Auto Scaling > 3-Phase (1)	0.500 ~ 2.250	
Auto Scaling > 3-Phase (2)	0.500 ~ 2.250	
Auto Scaling > 3-Phase (3)	0.500 ~ 2.250	
Dummy Load	[Menu]	See Dummy Load.

© 2017 DynaGen Technologies Inc

AC Monitor > O.C. Protection:

Name	Range	Description
Basic Alarm	[Menu]	See Basic Alarms.
IDMT Protect	Disable Breaker Trip Shutdown Trip	See IDMT.
IDMT Settings	[Menu]	
Imbalance Mode	Disable Breaker Trip Shutdown Trip	See Load Imbalance.
Imbalance Set	[Menu]	
Break Trip Fail	Disable Enable	Shuts down the generator if the generator circuit breaker fails to trip. If the Breaker Trip switched output is active - due to IDMT or Load Imbalance - and if after 10s the measured generator current is still above 10% of the Rated Current the generator will shut down.

5.7.3.1 Basic Alarms

The controller can give a warning and/or shutdown on over current. If IDMT is enabled then it overrides the High Failure shutdown but the warning is still active.

AC Monitor > O.C. Protection > Basic Alarm:

Name	Range	Description
High Warn	Disable, 1 ~ 125%	Reading at which a warning occurs.
High Fail	Disable, 1 ~ 125%	Reading at which a failure occurs.

Percentages are based on the Rated Amps setting. The warning and failure setpoints apply to each phase separately and not to the sum of the phases.

5.7.3.2 IDMT

Sets an inverse time trip curve for over-current. When set this overrides the Over Current Failure.

AC Monitor > O.C. Protection:

Name	Range	Description
IDMT Protect	Disable Breaker Trip Shutdown Trip	**Disable**: Disables the IMDT feature. **Breaker Trip**: If IDMT is active the Breaker Trip switched output is activated to switch off the main generator breaker. This is a latching feature. The operator must press the  and  keys to reset the feature. **Shutdown Trip**: shuts down the engine.
IDMT Settings > TDS Const (Time Dial Setting)	0.1 ~ 30	Sets the slope of the IDMT curve. This controls the sensitivity of the trip to over current.
IDMT Settings > IDMT Reset	1 ~ 600 seconds	How long the current must drop and stay below the rated current to reset the IDMT.

© 2017 DynaGen Technologies Inc

The equation for the IDMT is given as:

$$(t_r)_m = \frac{TDS * 13.5}{\frac{I}{Is} - 1}$$

Where,

TDS is the time dial setting above.
I_s is the Rated Current (A).
I is the actual current measured by the controller (A).
$(t_r)_m$ is the trip time in seconds.

For example with a Rated Current of 100A and a TDS of 0.1 the IDMT will trigger in:
0.15s if the actual generator current is 1000A.
1.35s if the actual generator current is 200A.
6.75s if the actual generator current is 120A.

5.7.3.3 Load Imbalance

Load imbalance provides protection against differences in phase currents.

AC Monitor > O.C. Protection:

Name	Range	Description
Imbalance Mode	Disable Breaker Trip Shutdown Trip	**Disable**: Disables the Load Imbalance feature. **Breaker Trip**: If Load Imbalance is active the Breaker Trip switched output is activated to switch off the main generator breaker. This is a latching feature. The operator must press the ▲ and ▼ keys to reset the latch. **Shutdown Trip**: shuts down the engine.
Imbalance Set > Imbalance	1 ~ 200%	The percentage of rated current that any phase must exceed the other phases by to trigger a load imbalance.
Imbalance Set > Debounce	1 ~ 600 seconds	The length of time to allow an imbalance before triggering (trip, shutdown).

The load imbalance formula is given as:

For three phase:

$$max\{|I_A - I_B|, |I_A - I_C|, |I_B - I_C|\} > Rated\ Amps \times Phase_Imbalance_Threshold(\%)$$

For single phase:

$$|I_1 - I_2| > Rated\ Amps \times Phase_Imbalance_Threshold(\%)$$

Where,

I_A,I_B, and **I_C** are the actual current measured by the controller.

Note: Phase Imbalance is the same as load imbalance.

 © 2017 DynaGen Technologies Inc

5.7.3.4 Dummy Load

The dummy load feature can be enabled to prevent wet stacking.

AC Monitor > Genset Current > Dummy Load:

Name	Range	Description
Bypass Time	Disabled, 1 ~ 120 seconds	The amount of time to delay before applying the dummy load.
Load On	Disabled, 1 ~ 500A	The threshold below which the dummy load is applied. There is a 4s debounce time. The bypass time must expire before the load is applied. All phases must drop below this threshold to trigger dummy load.
Load Off	Disabled, 1 ~ 500A	The threshold above which the dummy load is removed. Dummy load is turned off if one phase rises above this threshold.

One of the switched outputs must also be set to dummy load. The output is only turned on when the engine is running.

5.7.3.5 EPS Supplying Load

The EPS (Emergency Power System) Supplying load sets a flag in Modbus register 40006 to indicate to the DynaGen RA400 remote annunciator that the generator is actively supplying power. If this flag is set the RA400 will light it's EPS Supplying Load indicator. This is used to meet NFPA110 requirements.

If the actual current measured on any one phase of the generator is above 5% of the AC over current warning set point then the EPS Supplying load flag is set. For more information on this register refer to the Tough Series modbus manual or RA400 manual.

5.8 Communications

The controller has the ability to communicate with other systems over communication buses. The following sections relate to settings associated with communications.

5.8.1 CAN Bus (J1939)

For detailed information about J1939 settings and functions please use the J1939 Reference Manual. The manual can be found at www.dynagen.ca/support.

Name	Range	Description
ECM Model	Generic J1939 John Deere JDEC Volvo EMS This is not a complete list. See the J1939 User Manual for the full list.	Choose one of the compatible ECM modules from the list.
ECM Communication Failure	Enable ~ Disable	If no CAN messages are received for more than 6 seconds, the controller shuts down the engine.
DTC Display	Enable ~ Disable	Enables or disables active fault messages (DM1) monitoring.
Active DTC Log	Enable ~ Disable	Enables or disables the storing of active faults (DM1).
Read Stored DTC	Enable ~ Disable	Enables or disables the ability to request stored fault codes from the ECM (DM2).
Auto Power ECM	Enable ~ Disable	When enabled, the fuel relay is enabled in Auto mode so that the ECM is already booted up and initialized before the user decides to start the engine.

 © 2017 DynaGen Technologies Inc

Name	Range	Description
ECM Power Delay	5 ~ 30 seconds	Used in conjunction with Auto Power ECM. When the engine shuts down, the controller waits for the time specified by the ECM Power Delay before turning on the fuel relay. This prevents unwanted start ups due to the engine not being completely shut down.
Cummins PGNs	Enable ~ Disable	Enables or disables the broadcasting of PGNs required by Cummins engines.
SPN Conversion	Version 1 Version 2 Version 3	Select the SPN conversion method.
EMS2B Frequency Select	Primary Secondary	For Volvo EMS2B Engine Control Modules only.
EMS2B Accelerator Pedal	40.0 ~ 60.0%	For Volvo EMS2B Engine Control Modules only.

5.8.2 Modbus (RS485)

The Modbus functionality on the controller provides interface ability to PLCs, SCADA and building management systems. For detailed information about the Modbus registers and their interpretations please use the Modbus Reference Manual. The manual can be found at www.dynagen.ca/support.

Name	Description	Range / Values
Device Address	The device address of the controller.	1 ~ 247 (Default = 1)
Baud Rate (BPS)	The speed at which the controller (slave) communicates with the master.	9600 (Default), 19200, 38400, 57400
Communication Protocol	The controller always communicates in Modbus RTU.	Modbus RTU (Fixed)
Slave / Master Configuration	The controller is always the slave and must be queried by the master.	Slave (Fixed)

5.9 Other Config

This section contains miscellaneous settings.

5.9.1 Password

The default password to change settings is "0000". The Password menu is used to change this password and control when it shows up.

Other Config > Passcode:

Name	Range	Description
Bypass	Disable (Default) Enable	If enabled a password is not required to change settings.
Timeout	0 ~ 120 minutes in 1 minute increments (Default = 10 minutes)	How long after the password is entered before the user is required to enter it again. The timeout is implemented as a simple countdown timer. The following apply: • If the bypass time is changed this new bypass time will not be loaded until the countdown timer has expired and the user enters the password. • The countdown timer is stored in non-volatile memory and is "paused" when the controller is powered off. The counter will resume when the controller is powered on again. • Any button press in the menu will reset the timer.

 © 2017 DynaGen Technologies Inc

Name	Range	Description
Passcode	0000 ~ 9999 (Default = 0000)	The four numeric digits that make up the password.

5.9.2 Settings Name / ID

If storing settings from the RapidCore Configuration Software a custom name can be entered to allow users to determine the settings that are stored in the controller. This custom name, called "Configuration Name" (ID in the controller) is found under Options in the settings tab of the Configuration Software. There is no controller menu to set this ID. It can be up to 12 characters long.

The Configuration Name can be viewed in the Device Info > About TG410/TG350 menu. It is labeled ID.

5.9.3 Process Control

Note: The process control is disabled in the TE Series. Contact Factory for more information.

The Process Control feature has two different control methods: Main-In and Main-Out. The Main-In maintains a reservoir level by controlling the flow of fluid into the reservoir. The Main-Out maintains a reservoir level by controlling the flow of fluid from the reservoir. It does this by regulation the speed of the engine over the J1939 CAN bus.

The controller reads the sensor value from selected Auxiliary Sensor input (1~5), compares the input value with the set-point, and then, based on an algorithm, increments or decrements the speed (RPM) by a certain amount to maintain the desired set-point outside of the dead-band area. Control pauses inside the dead-band area. If the sensor input goes beyond a minimum or maximum value, the algorithm will pause and the RPM will be maintained at a minimum or maximum value.

The algorithm is a fuzzy logic type control with a dead band and a minimum / maximum saturation. The user sets the aggressiveness of the control with the *Gain* setting and the response time of the control with the *Delay* setting.

(Other Config > Process Control menu)

Name	Range	Description
Closed Loop > System (Control Type)	Disabled Main-In (Maintain In) Main-Out (Maintain Out)	Main-In controls the level when pumping fluid into a reservoir. Main-Out controls the level while pumping fluid out of the reservoir.
Closed Loop > Sensor In (Sensor Input)	AUX-1 AUX-2 AUX-3 AUX-4 AUX-5 (Transducer)	The Auxiliary Sensor Input function that is providing feedback on the reservoir level. Aux-5 refers to the Transducer under the Application menu.
Closed Loop > Delay	1 ~ 30 s in 0.1 s increments	The sampling time of the control algorithm.
Closed Loop > Gain	1 ~ 30 in 0.1 increments	The amount to increment or decrement the RPM when the sensed value is outside of the dead-band.
Setpoints > Main-In (Maintain In Setpoint)	1 ~ 900 in 0.1 increments	The level set-point to attempt to maintain. Only applies if System is set to In-Keep.
Setpoints > Main-Out (Maintain Out Setpoint)	1 ~ 900 in 0.1 increments	The level set-point to attempt to maintain. Only applies if System is set to Out-Keep
Setpoints > Deadband+ (High Deadband)	1 ~ 30 in 0.1 increments	The high limit of the dead-band.
Setpoints > Deadband- (Low Deadband)	1 ~ 30 in 0.1 increments	The low limit of the dead-band.
Thresholds > High Edge (High Limit)	1 ~ 900, 0.1 increments	The high saturation. The maximum level at which the RPM control is fixed.

 © 2017 DynaGen Technologies Inc

Thresholds > Low Edge (Low Limit)	1 ~ 900, 0.1 increments	The low saturation. The minimum level at which the RPM control is fixed.
Thresholds > Max RPM (Max Limit RPM)	500 ~ 4000 RPM in 1 RPM increments	The fixed RPM that should be used when the level rises above the High Edge.
Thresholds > Min RPM (Low Limit RPM)	500 ~ 4000 RPM in 1 RPM increments	The fixed RPM that should be used when the level falls below the Low Edge.

5.9.4 Pump System

This menu contains various settings related to pumping applications. It is used in conjunction with the Application menu. The application menu is the end user oriented menu which allows end user to make changes.

Name	Range	Description
Run Button (Manual Run Button)	Run Only Run&Throttle	Controls when the user can manually adjust the engine speed when the controller is started by a manual run. "Run Only" means the speed can only be adjusted once the engine speed has reached the goal speed. "Run&Throttle" means the speed can be adjusted once the engine has reached idle.
Ramp Setting	Sub menu	-----
Ramp Setting > Goal Speed	500 ~ 4000 RPM in 1 RPM increments	The final speed after the speed ramping is finished.
Ramp Setting > Bump Speed	Disable, 0 ~ 500 RPM in 1 RPM increments	The maximum amount the user is allowed to adjust the speed.
Ramp Setting > Interm Speed (Intermediate Speed)	500 ~ 4000 RPM in 1 RPM increments	The speed between the idle and goal speeds.
Ramp Setting > Interm Delay (Intermediate Delay)	1 ~ 300 s in 1 s increments	The amount of time to remain at the intermediate speed.
Ramp Time	Sub menu	-----
Ramp Time > Dwell 1 (Idle to Intermediate)*	1 ~ 300 s in 1 s increments	The amount of time to ramp from the idle to intermediate speed.
Ramp Time > Dwell 2 (Intermediate to Rated)*	1 ~ 300 s in 1 s increments	The amount of time to ramp from the intermediate to goal speed.
Ramp Time > Dwell 3 (Rated to Idle)*	1 ~ 300 s in 1 s increments	The amount of time - in addition to the cooldown time - to ramp from the goal speed to the idle speed.
Float Control	Disable Fill Tank Empty Tank	Float control can autostart the engine if one of the switched input functions are set to the float function and is active. For example for a single float system "Fill tank" will start the engine if float 1 switched input is inactive (open). "Empty Tank" will start the engine if "float 1" switched input is active (closed). Refer to the Autostart on Floats section of the manual in the Application chapter. Single / Dual Floats mode is set by the "Float Autostart" setting in the Application > Function menu.
Tank Maximum	Sub menu	These settings determine the maximum aux sensor value that is equivalent to a full tank. If the sensor value rises above these setpoints then the value displayed in the tank is clamped to these settings. Used by the Aux 5 (Transducer) sender in the Application menu.
Tank Maximum > Max %	Disable, 0.1 ~ 110.0 % in 0.1 % increments	
Tank Maximum > Max Psi	Disable, 0.1 ~ 110.0 % in 0.1 % increments	
Tank Maximum > Max Foot	Disable, 0.1 ~ 110.0 % in 0.1 % increments	
RPM Display	Blank AC Hertz Aux Sensor 1	This is a replication of the "RPM Display" setting in the Sensors > Engine Speed menu.

© 2017 DynaGen Technologies Inc

Name	Range	Description
	Aux Sensor 2	
RPM Setting	Sub menu	These are a replication of the RPM Setting menu under the Sensors > Engine Speed menu. The first three control the minimum and maximum that the engine speed to be adjusted to. The Tsc1 RPM/s setting controls the maximum rate at which the engine speed can be changed. These affect automatic and manual speed control and any other speed control features.
RPM Setting > Min Speed	500 ~ 4000 RPM in 1 RPM increments	
RPM Setting > Max Speed	500 ~ 4000 RPM in 1 RPM increments	
RPM Setting > Speed Bias	0 ~ 600 RPM in 1 RPM increments	
RPM Setting > Tsc1 RPM/s	Disable, 10 ~ 300 RPM/s in 10 RPM/s increments	

* Note that the minimum ramp rate is 1.25RPM/s. If the speeds to ramp between and the ramp delay give a rpm/s below this then 1.25rpm/s will be used. For example a speed difference of 300RPM and a ramp time of 300s gives 1 RPM/s but 1.25RPM/s will be used instead giving a ramp time of 240s (300 RPM ÷ 1.25 RPM/s = 240s).

 © 2017 DynaGen Technologies Inc

6 Troubleshooting

If you are having issues with your controller, please refer to the table below for a solution before contacting technical support.

Issue	Solution
Engine starts but the crank output does not turn off	The controller is not receiving a speed signal. 1. Verify the Sensors -> Engine Speed -> Signal Source setting is set correctly. 2. Verify the Timers -> Engine Logic -> RPM Disconnect setting is set correctly. 3. Ensure the correct wiring to the controller. For magnetic pickup, Speed Sensing A and B terminals are used. For generator voltage, the AC voltage connections are used.
Sensor always displays its lowest or highest value	The sensor could either be open (not connected) or shorted to ground. Verify your connections and ensure the correct sender table is loaded.

Contacting DYNAGEN can be done by any of the methods below. Technical support is offered Monday - Friday, 8:00am - 4:00pm (EST). If you are unable to contact one of our engineers, please leave a message and they will return your call as soon as possible.

Type	Information
Website	www.dynagen.ca/support
Email	support@dynagen.ca
Phone Number	(902) 406-0133
Twitter	@DynaGenTech
Facebook	www.facebook.com/DYNAGEN
Address	3 Spectacle Lake Drive, Unit B105 Dartmouth, NS B3B1W8, Canada

© 2017 DynaGen Technologies Inc

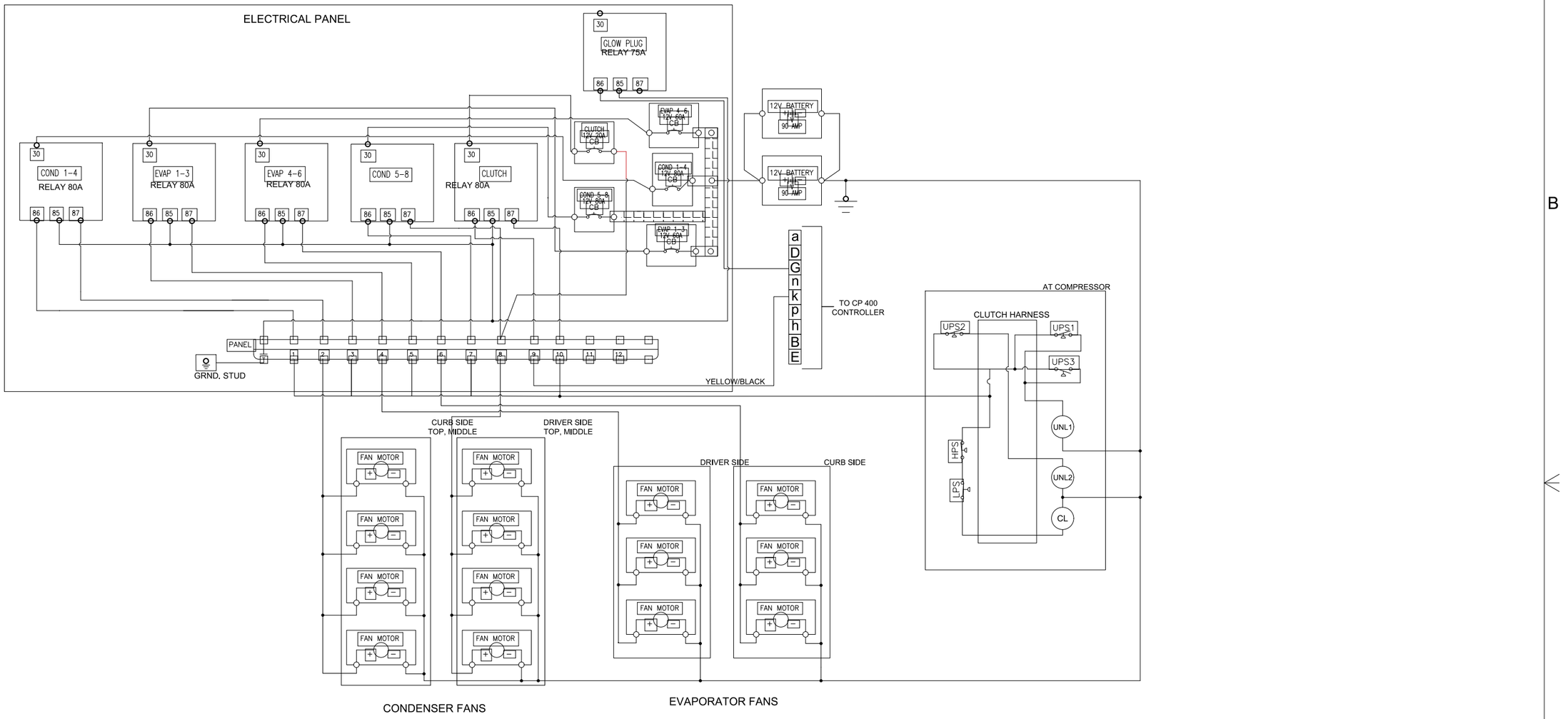

REV:	ECN:	DESCRIPTION:	DATE:	BY:

THIS DRAWING CONTAINS PROPRIETARY CONFIDENTIAL INFORMATION OWNED BY TRANSARCTIC CANADA INC.. THE DOCUMENT AND THE INFORMATION IN IT ARE NOT TO BE USED, DISCLOSED OR REPRODUCED WITHOUT EXPRESS WRITTEN PERMISSION OF THE COMPANY.

UNSPECIFIED TOLERANCES:

	MM	INCH
ONE DECIMAL PLACE (.X)	,50	,020
TWO DECIMAL PLACE (.XX)	,25	,010
THREE DECIMAL PLACE (.XXX)	.10	.005
FRACTIONAL +/- 1/32"	ANGULAR	+/- .50'

THIRD ANGLE PROJECTION

DRAWN	N. GILLESPIE	
CHECKED		
QA		
MFG		
APPROVED		
DRAWING UNIT OF MEASURE:	MM [INCH]	

TRANSARCTIC INC.

TITLE

ELECTRICAL SCHEMATIC

SIZE		DWG NO	REV
B		KEP18060	
SCALE		SHEET 1 OF 2	

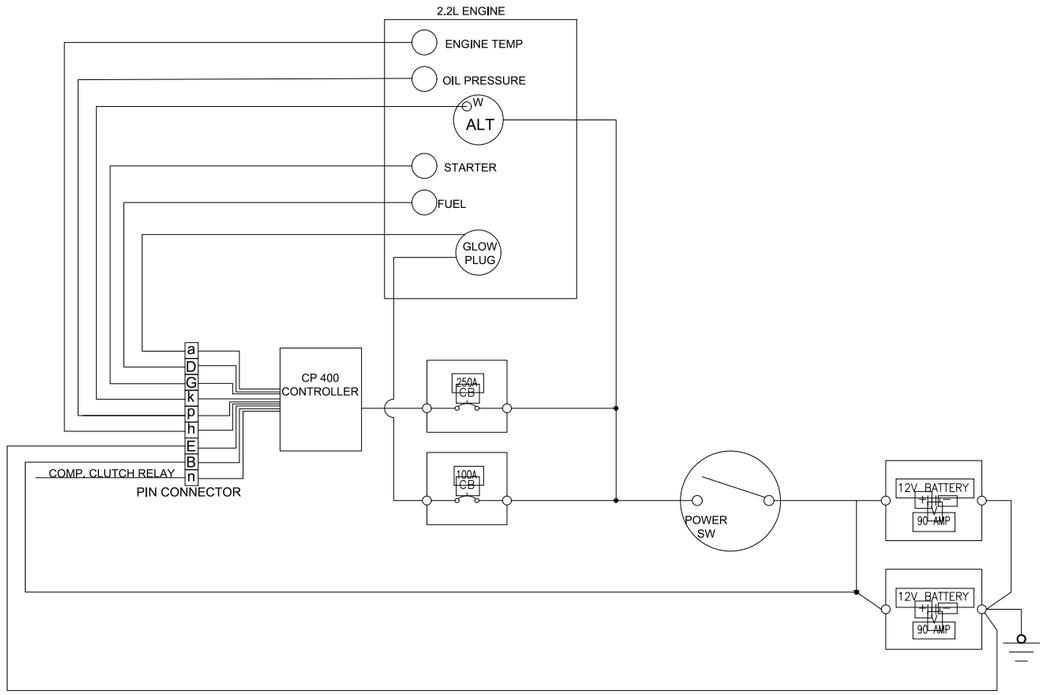

REV:	ECN:	DESCRIPTION:	DATE:	BY:

THIS DRAWING CONTAINS PROPRIETARY CONFIDENTIAL INFORMATION OWNED BY TRANSARCTIC CANADA INC.. THE DOCUMENT AND THE INFORMATION IN IT ARE NOT TO BE USED, DISCLOSED OR REPRODUCED WITHOUT EXPRESS WRITTEN PERMISSION OF THE COMPANY.

UNSPECIFIED TOLERANCES:

	MM	INCH
ONE DECIMAL PLACE (.X)	.50	.020
TWO DECIMAL PLACE (.XX)	.25	.010
THREE DECIMAL PLACE (.XXX)	.10	.005
FRACTIONAL +/- 1/32"	ANGULAR	+/- .50°

THIRD ANGLE PROJECTION

DRAWN	N. GILLESPIE	
CHECKED		
QA		
MFG		
APPROVED		
DRAWING UNIT OF MEASURE:	MM [INCH]	

TRANSARCTIC INC.

TITLE

ELECTRICAL SCHEMATIC

SIZE	DWG NO	REV
B	KEP18060	

SCALE

SHEET 2 OF 2

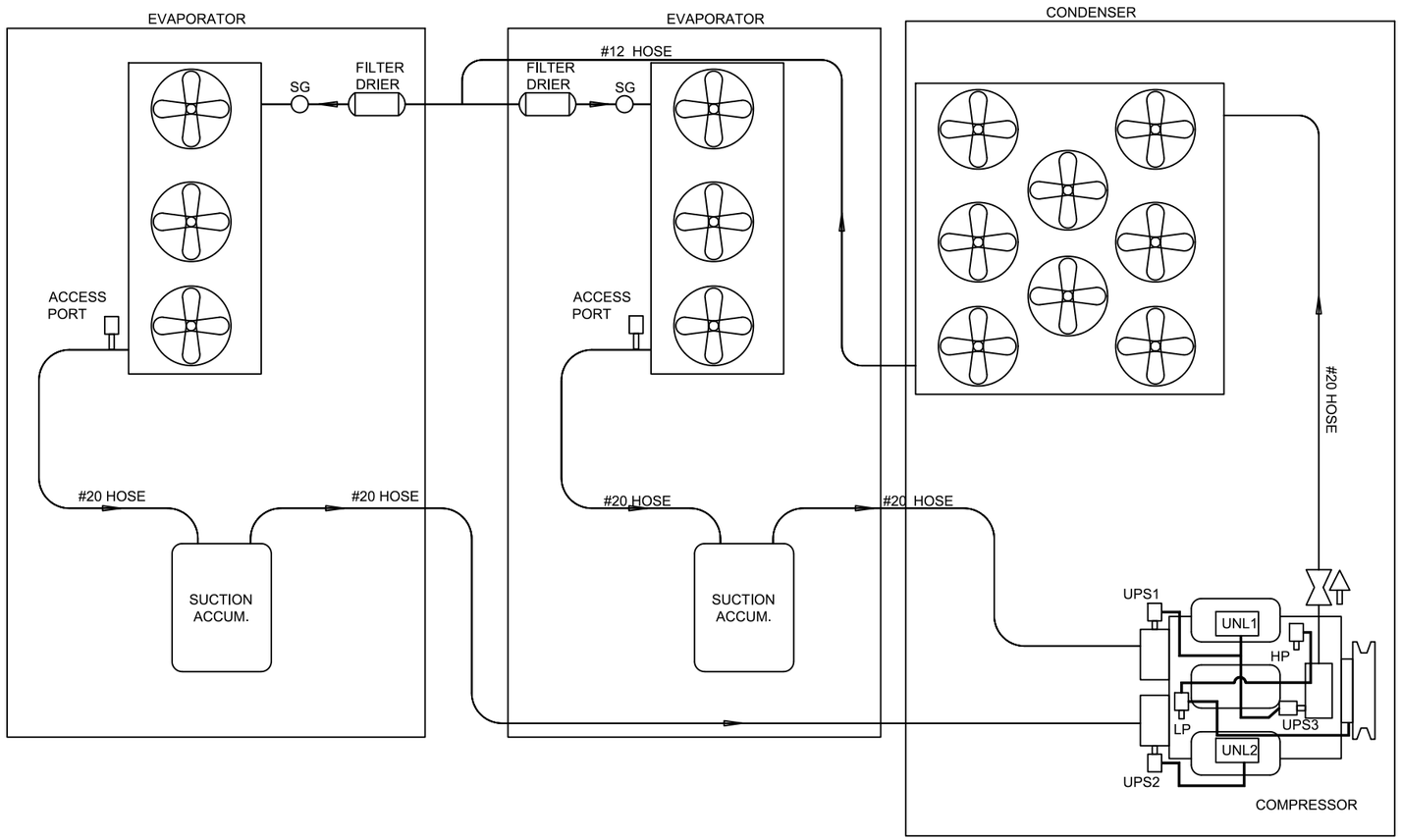

SG= SIGHT GLASS
UNL = UNLOADER
UPS = UNLOADER PRESSURE SW.
HPS = HIGH PRESSURE SW.
LPS = LOW PRESSURE SW.

REV:	ECN:	DESCRIPTION:	DATE:	BY:

THIS DRAWING CONTAINS PROPRIETARY CONFIDENTIAL INFORMATION OWNED BY TRANSARCTIC CANADA INC.. THE DOCUMENT AND THE INFORMATION IN IT ARE NOT TO BE USED, DISCLOSED OR REPRODUCED WITHOUT EXPRESS WRITTEN PERMISSION OF THE COMPANY.

UNSPECIFIED TOLERANCES:

	MM	INCH
ONE DECIMAL PLACE (.X)	.50	.020
TWO DECIMAL PLACE (.XX)	.25	.010
THREE DECIMAL PLACE (.XXX)	.10	.005
FRACTIONAL +/- 1/32"	ANGULAR	+/- .50'

THIRD ANGLE PROJECTION

DRAWN	N. GILLESPIE	
CHECKED		
QA		
MFG		
APPROVED		
DRAWING UNIT OF MEASURE:	MM [INCH]	

TRANSARCTIC INC.

TITLE

PNID CHICKZILLA

SIZE	DWG NO	REV
B	KEP18060	

SCALE

SHEET 1 OF 1